PARTS CATALOGUE - S1870
Construction numbers – 41100 – 41179, 41191 – 41209, 41260

Abbreviations

01 Complete vehicle

- 0101 General
  - 0101.12-0001 Hose clips
  - 0101.12-0101 Pipe clips
  - 0101.12-0102 Pipe clips
  - 0101.12-0201 Line clips
  - 0101.12-0202 Line clips
  - 0101.12-0203 Line clips
  - 0101.12-0204 Line clips
- 0109 Fire protection and fire extinguishing equipment
  - 0109.03-1002 Fire protection and fire extinguishing equipment
- 0113 Onboard tool set
  - 0113.01-5001 Tool kit

02 Traction motor

- 0201 Engine complete
  - 0201.00-3030 Engine
- 0206 Engine mounting
  - 0206.00-0048 Rubber-metal mounts
- 0210 Fuel system
  - 0210.01-3014 Throttle control
  - 0210.02-0051 Fuel tank
  - 0210.02-3008 Filler pipe
  - 0210.03-0026 Fuel filter
  - 0210.08-0062 Fuel pipes
  - 0210.08-0063 Fuel supply
- 0218 Electrical equipment
  - 0218.01-0001 Starter
- 0222 Air intake system
  - 0222.01-0048 Air filter
  - 0222.02-0001 Silicon hoses, straight
  - 0222.02-0002 Silicon hoses, adapter
  - 0222.02-0003 Silicon hoses, elbow
  - 0222.02-1002 Piping
  - 0222.02-2012 Piping
  - 0222.04-3077 Charge air cooler

0230 Exhaust System
- 0230.02-0024 Piping
- 0230.04-0010 Exhaust aftertreatment device
- 0230.04-1003 AdBlue injection system
- 0230.04-1005 AdBlue injection system
- 0230.04-2802 Filler cap

0234 Cooling system
- 0234.09-0037 Radiator
- 0234.11-1002 Silicon hoses
- 0234.11-2019 Brackets
- 0234.11-5001 Piping
- 0234.12-0038 Fan
- 0234.12-1027 Fan clutch
- 0234.13-0049 Expansion tank

0238 Lubrication system
- 0238.08-0007 Engine lubrication: accessories

0246 Accessory drive systems
- 0246.01-0049 Belts
- 0246.01-1010 Crankshaft belt pulley
- 0246.01-1032 Pulleys
- 0246.01-3012 Fan drive: tensioning system
- 0246.01-4006 Climate control compressor: tensioning system

03 Suspension

0306 Air suspension
- 0306.01-2020 Sensor
- 0306.02-0009 Components
- 0306.02-1016 Leveling valve, control

0310 Front axle suspension
- 0310.03-0011 Front axle: shock absorbers
- 0310.04-0009 Air springs

0314 Drive axle suspension
- 0314.00-0019 Suspension beams
- 0314.01-0010 Laminated spring
- 0314.01-0208 Torque rod
- 0314.02-1009 Anti-roll bar
- 0314.03-0014 Drive axle: shock absorbers
- 0314.04-0011 Air springs

0318 Trailing axle suspension
- 0318.03-0003 Trailing axle: shock absorbers
- 0318.04-0003 Air springs

0334 Wheels

0334.00-0038 Wheels, steel
0334.00-0044 Wheels, light alloy

0338 Tires

0338.00-0024 Tires
0338.01-0001 Tire pressure guarding system

04 Driveline/axle

0406 Final drive

0406.01-0001 Differential and axle shafts

0410 Propeller shaft

0410.00-0057 Propeller shaft
0410.01-0008 Propeller shaft: safeguard

05 Brakes

0502 Control system

0502.01-0011 Anti-lock brake system

0506 Anti-lock brake system

0506.00-0008 Anti-lock brake system

0510 Compressed-air brake

0510.01-0011 Compressed air system: components
0510.01-5023 Piping
0510.02-1006 Front axle: brake disc
0510.02-1105 Front axle: brake caliper + brake pads
0510.02-2011 Drive axle: brake disc
0510.02-2107 Drive axle: brake caliper + brake pads
0510.02-3005 Trailing axle: brake disc
0510.02-3104 Trailing axle: brake caliper + brake pads

06 Transmissions

0606 Clutch

0606.00-0012 Clutch

0610 Gearbox

0610.00-0034 Automatic transmission
0610.01-0055 Gearbox: control
0610.03-0017 Gearbox: suspension
0610.04-0019 Gearbox: accessories

07 Steering

- 0706 Front axle steering system
  - 0706.01-2009 Hydraulic power system: pump + accessories
  - 0706.01-6001 Hydraulic power system: oil tank
  - 0706.01-8016 Hydraulic power system: piping
  - 0706.02-1016 Steering mechanism: steering column
  - 0706.02.2010 Steering mechanism: pinion gear
  - 0706.02.3009 Steering mechanism: intermediate shaft
  - 0706.02-4016 Steering mechanism: steering gear box
  - 0706.02-5019 Steering mechanism: steering linkage

08 Interior climate control

- 0802 Control System
  - 0802.00-0046 Components

- 0806 Air purifying system
  - 0806.00-0044 Air Nozzles
  - 0806.01-0517 Front climate unit

- 0810 Water circuit
  - 0810.01-0006 Water pump
  - 0810.01-0007 Water pump
  - 0810.02-0029 Water heater
  - 0810.02-1000 Coolant heater: fuel filter
  - 0810.02-2013 Water heater: fuel pipes
  - 0810.02-7018 Water heater: exhaust system
  - 0810.03-0031 Valve block

- 0814 Refrigerant circuit
  - 0814.01-0061 Compressor complete

09 Occupant protection systems

- 0906 Seat belts
  - 0906.01-1001 Safety-belt cutter

10 Body and accessories

1002 External lighting and signaling devices
- 1002.02-0102 Headlights: fixing
- 1002.02-0111 Headlights: unlocking mechanism
- 1002.02-0112 Headlights
- 1002.02-0202 Headlights: fixing
- 1002.02-0211 Headlights: unlocking mechanism
- 1002.02-0212 Headlights
- 1002.02-0304 Fog/cornering lamp
- 1002.02-1013 Identification lights
- 1002.02-2006 Side lights
- 1002.02-3018 Rear position lamps
- 1002.02-4001 Extra stop lamp
- 1002.02-5005 Number plate light
- 1002.03-0002 Headlight cleaning system
- 1002.04-0009 Reflectors
- 1002.05-0011 Acoustic signals

1006 Interior Lighting Equipment
- 1006.03-0014 Lighting armature
- 1006.03-0025 Lighting armature
- 1006.03-0026 Lighting armature

1010 Windshield Wipers and Washer
- 1010.01-0027 Windshield Wipers
- 1010.01-2008 Actuating Linkage
- 1010.02-0013 Windscreen washers

1021 Driver information system
- 1021.03-1002 Loudspeaker complete
- 1021.05-2009 Camera

1022 Passenger information system
- 1022.01-0027 Passenger information system

1034 Glass, windows and mirror
- 1034.01-0071 Windscreen and rear window
- 1034.01-1087 Side windows
- 1034.01-1088 Side windows
- 1034.01-5011 Driver’s window
- 1034.02-1003 Exterior mirrors
- 1034.02-1016 Exterior mirrors
- 1034.03-0007 Interior mirror

1038 Body structure
- 1038.01-0027 Front
- 1038.02-0040 Rear wall
- 1038.03-0105 Side cowling
- 1038.03-0106 Side cowling

1042 Interior Equipment
- 1042.01-…. Instrument Panel
- 1042.02-3404 Chair leg
- 1042.02-3405 Chair leg
- 1042.xxx-xxxx Seat armshell covers

1054 Exterior parts
- 1054.01-0021 Front bumper
- 1054.01-0024 Front bumper
- 1054.01-1012 Hinge
- 1054.01-1013 Hinge
- 1054.01-1014 Latch
- 1054.01-5012 Rear bumper
- 1054.01-5026 Rear bumper
- 1054.02-0008 Exterior trim
- 1054.02.0067 Rubrails
- 1054.02.0068 Rubrails
- 1054.02-0070 Decorative Strips
- 1054.02-0071 Decorative Strips
- 1054.02-1002 Decorative strips
- 1054.06-0005 Emblem
- 1054.08-0009 Grille

1058 Interior trim
- 1058.00-0001 Lock
- 1058.00-0003 Upholstery: mounting material
- 1058.11-0005 Steering column
- 1058.11-0007 Steering column

1062 Doors
- 1062.01-4034 Passenger door 1: door rubbers
- 1062.01-5026 Passenger door 1: control

1066 Luggage and maintenance doors, hatches
- 1066.01.0162 Side access doors
- 1066.01-0163 Side access doors
- 1066.01-1001 Side access door + accessories
- 1066.01-1018 Side access door + accessories
- 1066.01-1030 Side access door + accessories
- 1066.01-1031 Side access door + accessories
- 1066.01-1032 Side access door + accessories
- 1066.01-1033 Side access door + accessories
- 1066.01-1034 Side access door + accessories
- 1066.01-1035 Side access door + accessories
- 1066.01-1036 Side access door + accessories
- 1066.01-1037 Side access door + accessories
- 1066.01-1038 Side access door + accessories
- 1066.01-1039 Side access door + accessories
- 1066.01-1040 Side access door + accessories
- 1066.01-1041 Side access door + accessories
- 1066.01-1042 Side access door + accessories
- 1066.01-1043 Side access door + accessories
- 1066.01-1044 Side access door + accessories
- 1066.01-1045 Side access door + accessories
- 1066.01-1046 Side access door + accessories
- 1066.01-2004 Side access door: mechanism
- 1066.01-2005 Rod
- 1066.01-2502 Side access door: frame
- 1066.01-2503 Side access door: frame
- 1066.01-3507 Tie-rod: parts
- 1066.01-5014 Mud guards
- 1066.01-7501 Rocker arm
- 1066.01-8049 Gas struts
- 1066.01-8051 Gas struts
- 1066.03-0003 Roof hatch

1082 Sanitary equipment
- 1082.02-0001 Lavatory
- 1082.02-1001 Lavatory
- 1082.02-3013 Lavatory: cabin
- 1082.02-3014 Lavatory: installation
- 1082.02-3015 Lavatory: cabin
- 1082.02-3016 Lavatory: cabin
- 1082.02-4001 Lavatory: installation
- 1082.02-4801 Lavatory: installation
- 1082.02-5005 Lavatory

11 Control system

12 Axles

1206 Front axle
1206.01-0001 Wheel suspension arms
1206.01-0002 Wheel suspension arms
1206.02-0010 Hub
1206.04-0004 Stub axles
1206.04-0005 Stub axles
1206.05-0005 Track rods
1206.05-9001 Track rod: parts
1206.05-9002 Track rod: parts
1206.06-0003 Stub axle carriers

1210 Drive axle
1210.01-0014 Hub

1214 Trailing axle
1214.01-0003 Wheel suspension arms
1214.01-0004 Wheel suspension arms
1214.02-0007 Hub
1214.06-0003 Hub carrier

13 Compressed-air feed system

1309 Air purifying devices
1309.03-0001 Compressed air system: air dryer

1317 Tanks
1317.00-0500 Tanks: aluminum
1317.00-0501 Tanks: steel
1317.01-0001 Drain valves

1325 Line
1325.00-0001 Hoses

1329 Schematic diagrams
1329.02-0143 Compressed air: steering wheel position control

14 Electrical

1402 Electric power supply
1402.02-1009 Alternator: parts
1402.03-0022 24V/DC-system: batteries
1402.03-0501 Battery clamps
1402.06-0001 Battery equalizer

1406 Junction boxes
1406.03-0012 Engine control panel

1410 Wiring

- 1410.02-1018 Cable terminals
- 1410.02-2002 Connectors: Multilock
- 1410.02-2012 Connectors: MCP 2.8
- 1410.02-3004 Junction block
- 1410.03-1008 (0002) Switches
- 1410.03-1051 Multifunctional control
- 1410.03-1055 Switches
- 1410.03-1103 Switches
- 1410.03-1207 Mechanical battery isolation switch
- 1410.03-1208 Push button
- 1410.03-1224 Battery isolation switch
- 1410.03-3000 Circuit breakers
- 1410.03-3100 Fuses
- 1410.03-3203 Fuse holders
- 1410.03-3204 Fuse holders

Pos.	Q.	Part n°	Description	Specification
		Ø	Diameter	
		#...	As needed	
		»XX	See XX	
		†	Available until stock is depleted	
		->CH-XX	Up to chassis n° XX (included)	
		->DAT-XX	Up to construction date XX (included)	
		(B)	Blue	
		(BR)	Brown	
		(GE)	Yellow	
		(GN)	Green	
		(GS)	Grey	
		(NP)	Not painted	
		(O)	Orange	
		(R)	Red	
		(RAL XX)	Color RAL ref. XX	
		(RO)	Pink	
		(T)	Transparant	
		(V)	Violet	

Pos.	Q.	Part n°	Description	Specification
		(W)	White	
		(XX-YY)	Combination of colours XX-YY	
		(Z)	Black	
		A	Ampère	
		ABS	Anti lock brake system	
		AC	Interior climate control	
		ASR	Antiskid system	
		Atu	Overpressure	
		b.	Width	
		CH-XX->	With effect from chassis n° XX	
		d.	Thickness	
		DAT-XX->	With effect from construction date XX	
		DIN	German Industrial Standard	
		EB	Electrically operated	
		EV	Electrically heated	
		F	Female	
		g	Gram	
		h.	Height	

Pos.	Q.	Part n°	Description	Specification
		kg	Kilogram	
		km/h	Kilometer/hour	
		kW	Kilowatt	
		l	Liter	
		l/min	Liters per minute	
		l.	Length	
		LHD	Left hand drive	
		Li	Left(hand)	
		Lk	Supplied by customer	
		Lz	Compressed length	
		M	Male	
		m.	Meter	
		mA	Milliampere	
		MAT:AL	Aluminium	
		MAT:BR	Bronze	
		MAT:CU	Copper	
		MAT:H	Wood	
		MAT:IN	Stainless steel	

Pos.	Q.	Part n°	Description	Specification
		MAT:P	Synthetic material	
		MAT:R	Rubber	
		MAT:SI	Silicone	
		MAT:ST	Steel	
		MAX	Maximum	
		MB	Manually operated	
		MIN	Minimum	
		mm	Millimetre	
		mph	Miles/hour	
		MT	Mark	
		m²	Square meter	
		NG	Normaly closed	
		NLA	Not longer available	
		NO	Normaly open	
		NST	Not shown	
		NV	Not shown	
		N°	Number	
		OS	Oversize	

Pos.	Q.	Part n°	Description	Specification
		Pos.	Item	
		PSI	Pounds/square inch	
		Q.	Number of/quantity	
		r	Ratio	
		Re	Right(hand)	
		Ref.	Reference	
		RHD	Right hand drive	
		RR	Driving direction	
		SDRD	Screw thread	
		Spec.	Specification	
		STD	Standard	
		STK	Piece	
		T/min	Revolutions per minute	
		V	Volt	
		VIN	Vehicle identification number	
		W	Watt	
		WB	Wheelbase	
		z	Number of teeth	

Hose clips

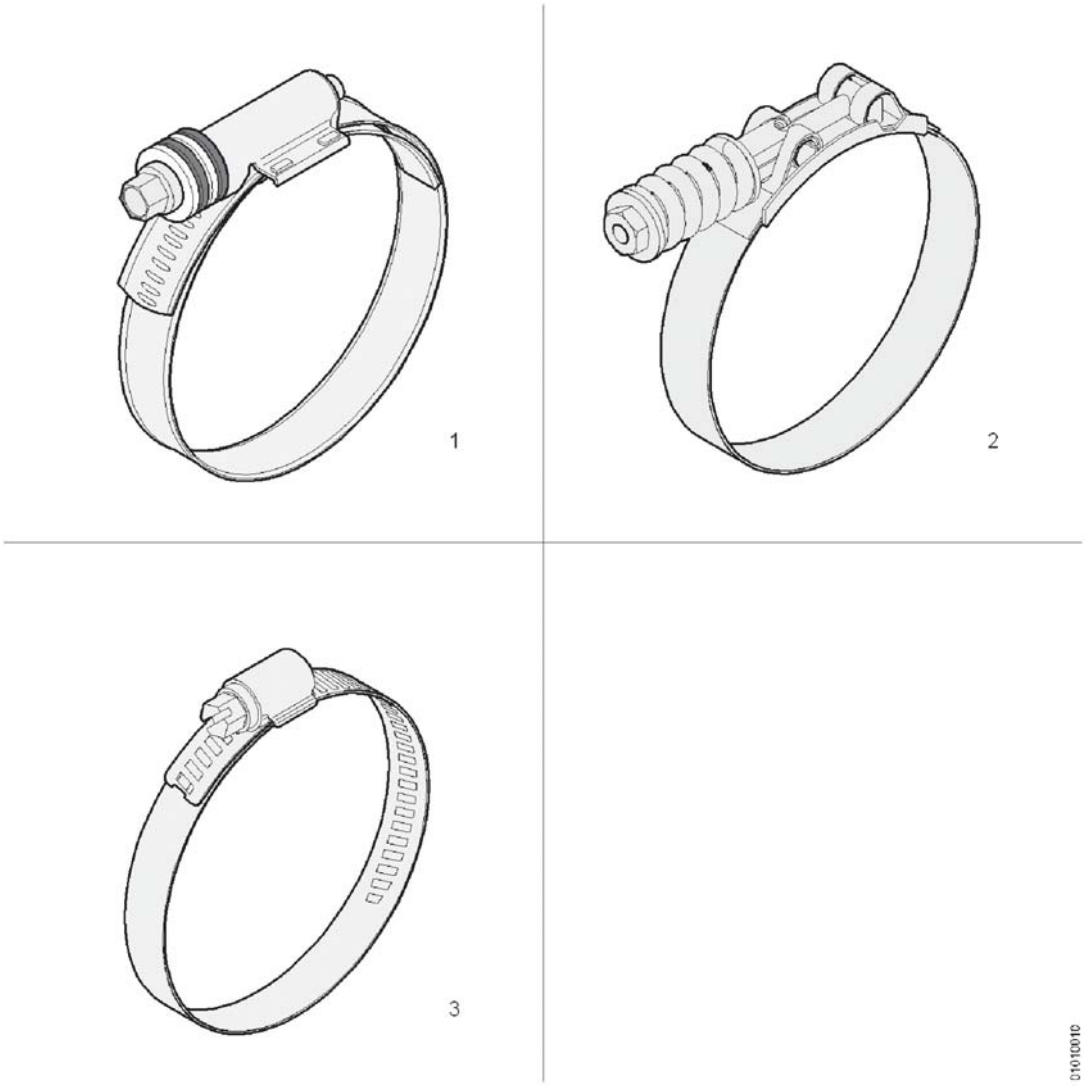

Pos.	Q.	Part n°	Description	Specification
1	#	10716346	Hose clip	Ø20-Ø32mm
		10716348	Hose clip	Ø25-Ø40mm
		10716349	Hose clip	Ø30-Ø45mm
		10716350	Hose clip	Ø35-Ø50mm
		10716351	Hose clip	Ø40-Ø60mm
		10716352	Hose clip	Ø50-Ø70mm
		10716353	Hose clip	Ø60-Ø80mm
		10716354	Hose clip	Ø70-Ø90mm
		10628956	Hose clip	Ø83-Ø105mm
		10617357	Hose clip	Ø95-Ø118mm
		10742004	Hose clip	Ø100-Ø120mm
2	#	11272218	Hose clip	Ø78-Ø96mm
		11250546	Hose clip	Ø103-Ø111mm
3	#	660514106	Hose clip	Ø13-Ø20mm MAT:IN
		660514105	Hose clip	Ø15-Ø24mm MAT:IN
		660514302	Hose clip	Ø19-Ø28mm MAT:IN
		660514303	Hose clip	Ø22-Ø32mm MAT:IN
		660514403	Hose clip	Ø26-Ø38mm MAT:IN

Hose clips

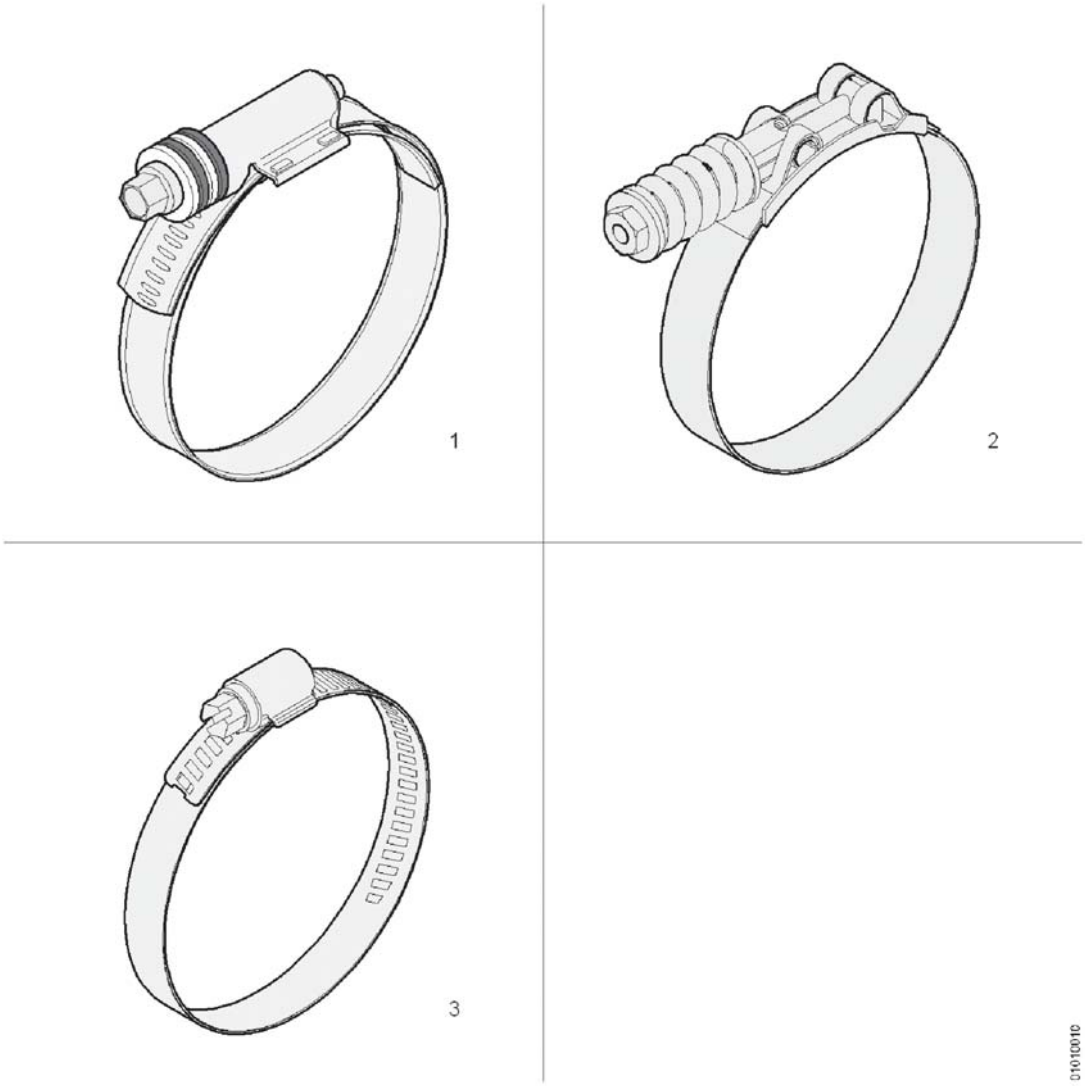

Pos.	Q.	Part n°	Description	Specification
		660514402	Hose clip	Ø34-Ø44mm MAT:IN
		660514603	Hose clip	Ø58-Ø75mm MAT:IN
		660514802	Hose clip	Ø77-Ø95mm MAT: IN
		10656667	Hose clip	Ø87-Ø112mm MAT:IN
		10662448	Hose clip	Ø104-Ø138mm MAT:IN
		10667308	Hose clip	Ø130-Ø165mm MAT:IN
		10665829	Hose clip	Ø150-Ø180mm MAT:IN
		10665830	Hose clip	Ø175-Ø205mm MAT:IN

Pipe clips

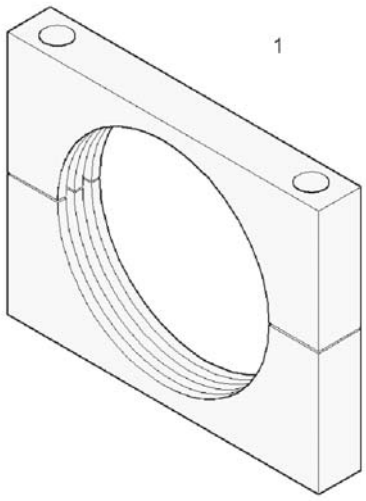

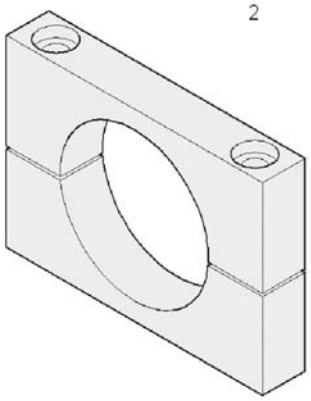

Pos.	Q.	Part n°	Description	Specification
1	#	10703812	Line clip	Ø100mm MAT: AL
2	#	10964676	Line clip	Ø120mm MAT: AL

Pipe clips

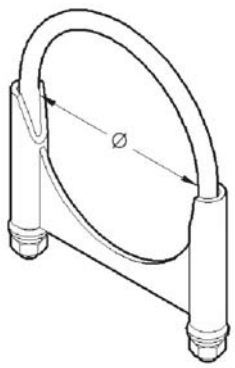

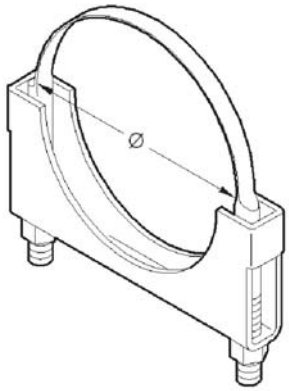

01010012

Pos.	Q.	Part n°	Description	Specification
1	#	10680100	Pipe clip	Ø60mm
		621207290	Pipe clip	Ø76mm
		621205070	Pipe clip	Ø84mm
		621205080	Pipe clip	Ø89mm
		621205090	Pipe clip	Ø95mm
		10668283	Pipe clip	Ø101mm
		621205100	Pipe clip	Ø104mm
		621205770	Pipe clip	Ø108mm
		621205760	Pipe clip	Ø114mm
		621205110	Pipe clip	Ø124mm
		10685702	Pipe clip	Ø130mm
		621207280	Pipe clip	Ø150mm
		-		
2	#	10828151	Pipe clip	Ø63mm
		10827997	Pipe clip	Ø76mm
		10881534	Pipe clip	Ø89mm
		10792787	Pipe clip	Ø101mm
		10749062	Pipe clip	Ø127mm

Line clips

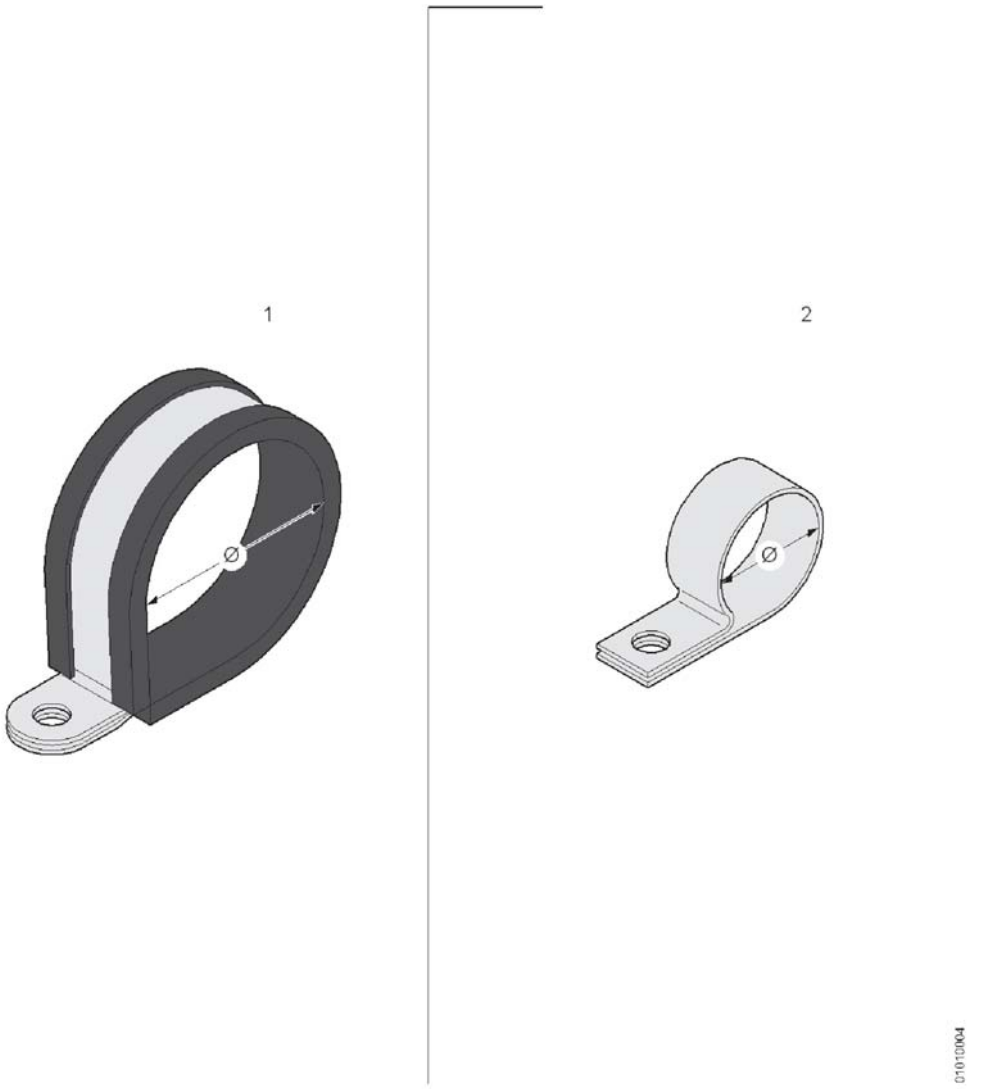

Pos.	Q.	Part n°	Description	Specification
1	#	637100050	Line clip	Ø5 MAT: ST
		637100720	Line clip	Ø6 MAT: IN
		637100070	Line clip	Ø8 MAT: IN
		637100080	Line clip	Ø10 MAT: IN
		637100090	Line clip	Ø12 MAT: IN
		637100100	Line clip	Ø14 MAT: IN
		637100110	Line clip	Ø15 MAT: IN
		10710276	Line clip	Ø16 MAT: IN
		637100120	Line clip	Ø18 MAT: IN
		11264743	Line clip	Ø19 MAT: IN
		637100130	Line clip	Ø20 MAT: IN
		637100140	Line clip	Ø22 MAT: IN
		11017866	Line clip	Ø24 MAT: IN
		10953619	Line clip	Ø25 MAT: IN
		637100820	Line clip	Ø26 MAT: IN
		637100150	Line clip	Ø28 MAT: IN
		10958674	Line clip	Ø30 MAT: IN
		10668168	Line clip	Ø32 MAT: IN

Line clips

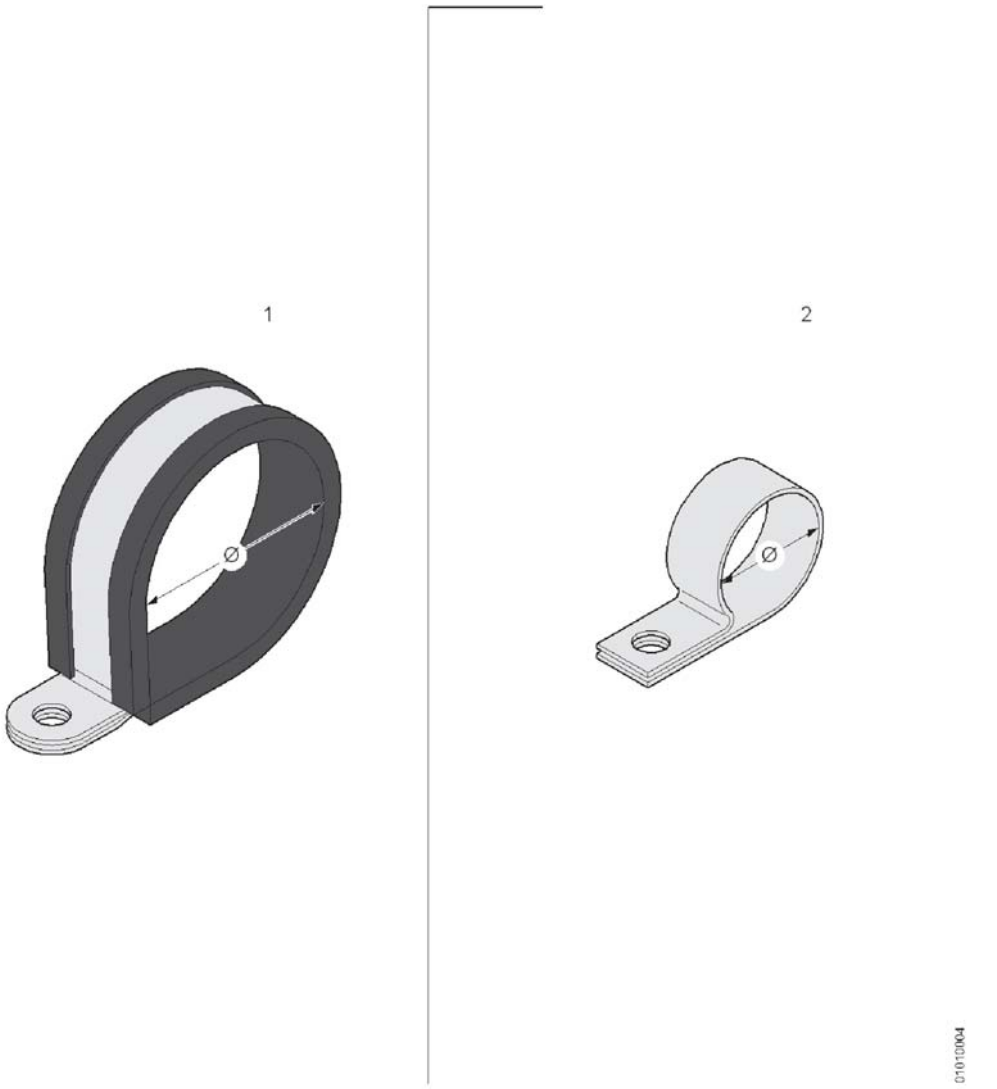

Pos.	Q.	Part n°	Description	Specification
		637101010	Line clip	Ø34 MAT: IN
		11093243	Line clip	Ø35 MAT: IN
		637100160	Line clip	Ø38 MAT: IN
		11231676	Line clip	Ø40 MAT:IN
		637100170	Line clip	Ø42 MAT: IN
		637100180	Line clip	Ø50 MAT: IN
		10898453	Line clip	Ø60 MAT: IN
		10955636	Line clip	Ø63 MAT:IN
		637102050	Line clip	Ø65 MAT: ST
		637100320	Line clip	Ø70 MAT: IN
		11139357	Line clip	Ø74 MAT: IN
		10944411	Line clip	Ø89 MAT: IN
2	#	10696092	Line clip	Ø25 MAT: IN
		637102700	Line clip	Ø80 MAT: ST
		637101460	Line clip	Ø130 MAT: ST

Line clips

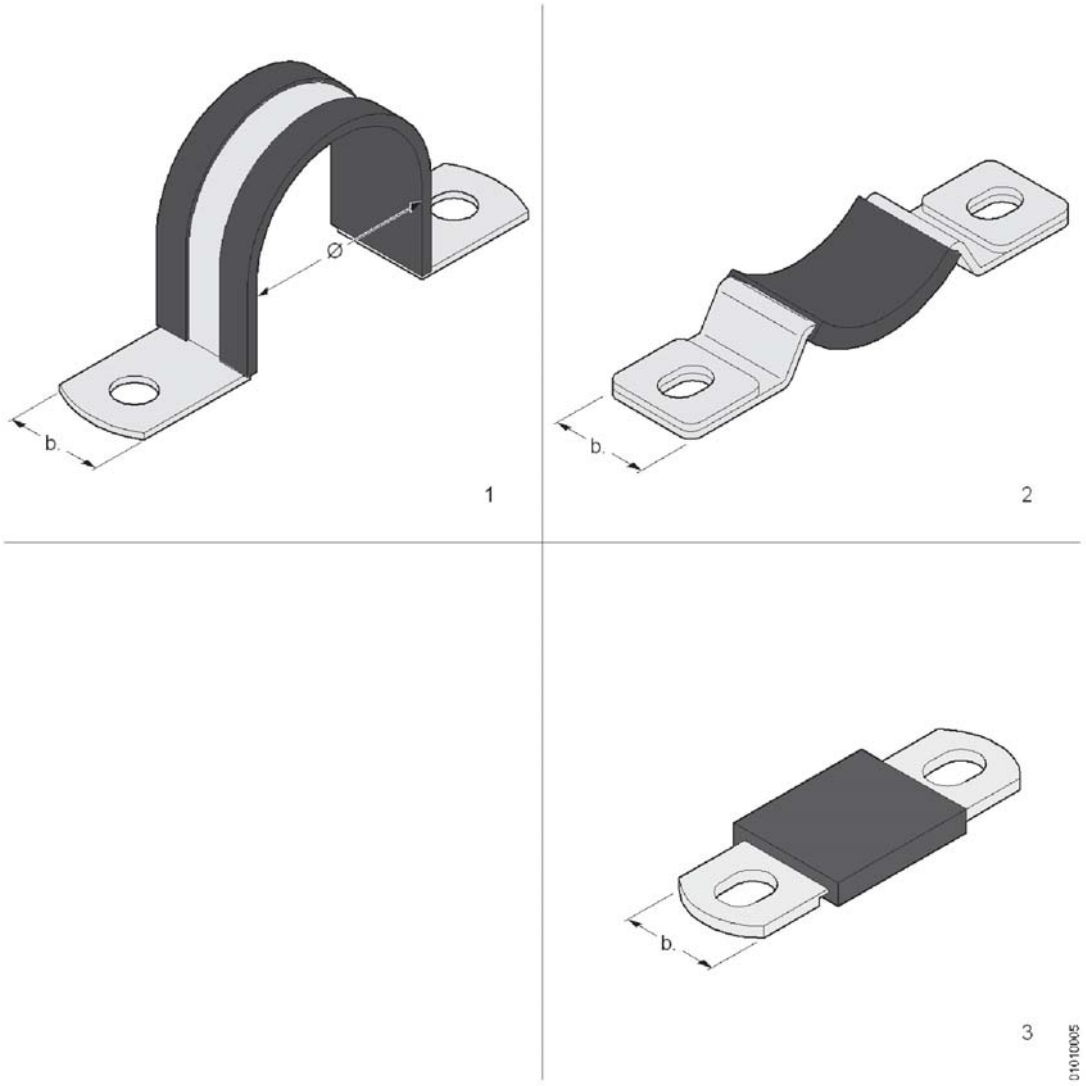

Pos.	Q.	Part n°	Description	Specification
1	#	10556637	Line clip	Ø18 b.=20mm MAT: IN
		11189553	Line clip	Ø20 b.=15mm MAT: IN
		11272815	Line clip	Ø20 b.=20mm MAT: IN
		10946361	Line clip	Ø22 b.=15mm MAT: IN
		11054684	Line clip	Ø25 b.=20mm MAT: IN
		10953637	Line clip	Ø28 b.=15mm MAT: IN
		10950592	Line clip	Ø34 b.=15mm MAT: IN
		11093237	Line clip	Ø35 b.=15mm MAT: IN
		10899185	Line clip	Ø36 b.=20mm MAT: IN
		637100220	Line clip	Ø38 b.=15mm MAT: IN
		10946375	Line clip	Ø38 b.=25mm MAT: IN
		10901212	Line clip	Ø40 b.=20mm MAT: IN
		11072940	Line clip	Ø40 b.=25mm MAT: IN
		10957328	Line clip	Ø42 b.=15mm MAT: IN
		10953944	Line clip	Ø42 b.=25mm MAT: IN
		10947902	Line clip	Ø46 b.=15mm MAT: IN
		10964666	Line clip	Ø50 b.=15mm MAT: IN
		637100880	Line clip	Ø50 b.=25mm MAT: IN

Line clips

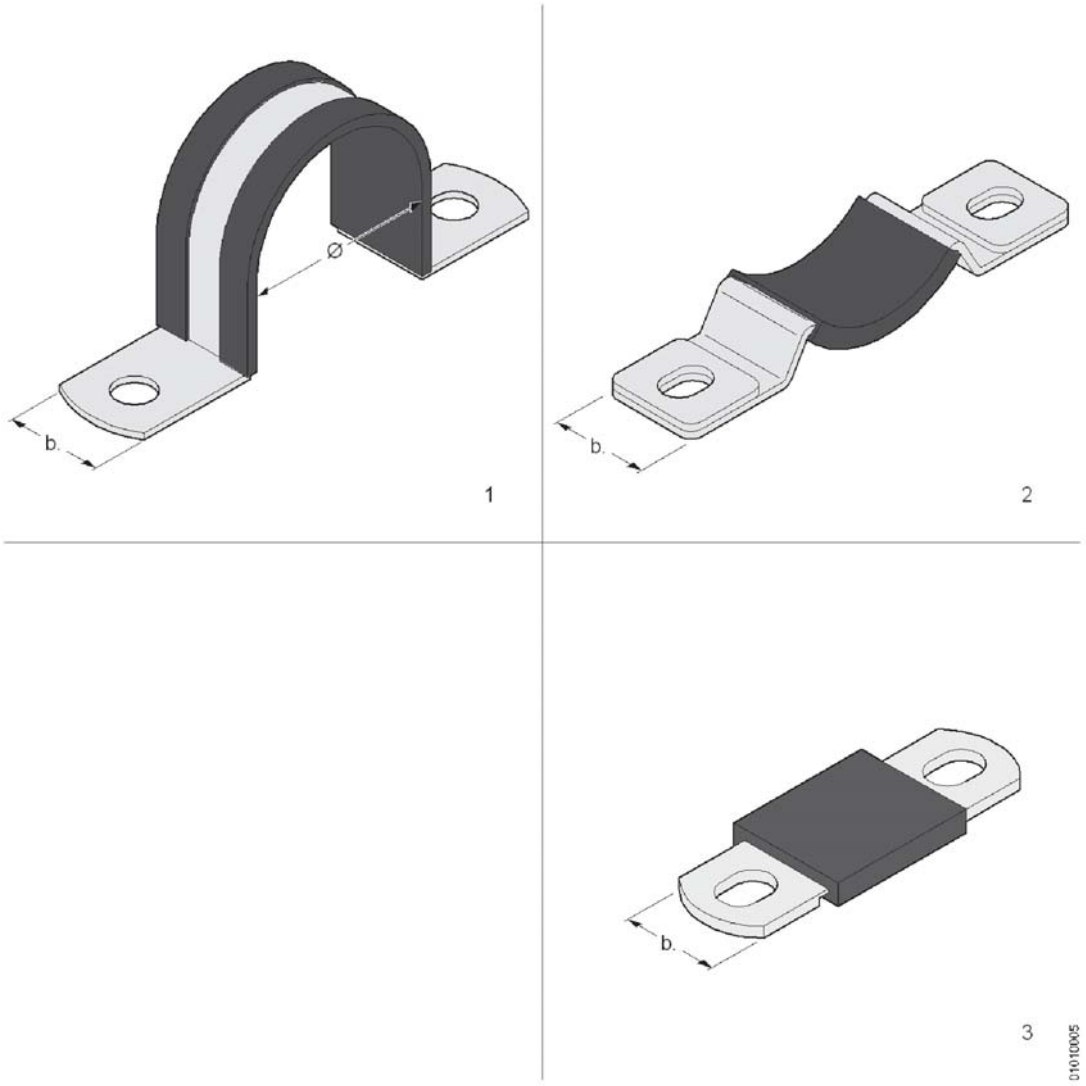

Pos.	Q.	Part n°	Description	Specification
		637101100	Line clip	Ø60 b.=25mm MAT: IN
		637102060	Line clip	Ø65 b.=25mm MAT: IN
		10946379	Line clip	Ø70 b.=15mm MAT: IN
		637100290	Line clip	Ø75 b.=15mm MAT: IN
		10925006	Line clip	Ø76 b.=20mm MAT: IN
		10843034	Line clip	Ø100 b.=25mm MAT: IN
		10709024	Line clip	Ø120 b.=20mm MAT: IN
		10741235	Line clip	Ø158 b.=20mm MAT: IN
2	#	10898234	Line clip	Ø50 b.=25mm MAT: IN
		10801142	Line clip	Ø60 b.=25mm MAT: IN
		11264088	Line clip	Ø70 b.=20mm MAT: IN
		10925244	Line clip	Ø76 b.=20mm MAT: IN
		10873399	Line clip	Ø100 b.=20mm MAT: IN
		11045649	Line clip	Ø158 b.=20mm MAT: IN
3	#	11272817	Line clip	Ø20 b.=23mm MAT: IN
		10934004	Line clip	Ø22 b.=15mm MAT: IN
		10934005	Line clip	Ø22 b.=20mm MAT: IN
		11054686	Line clip	Ø25 b.=20mm MAT: IN

Line clips

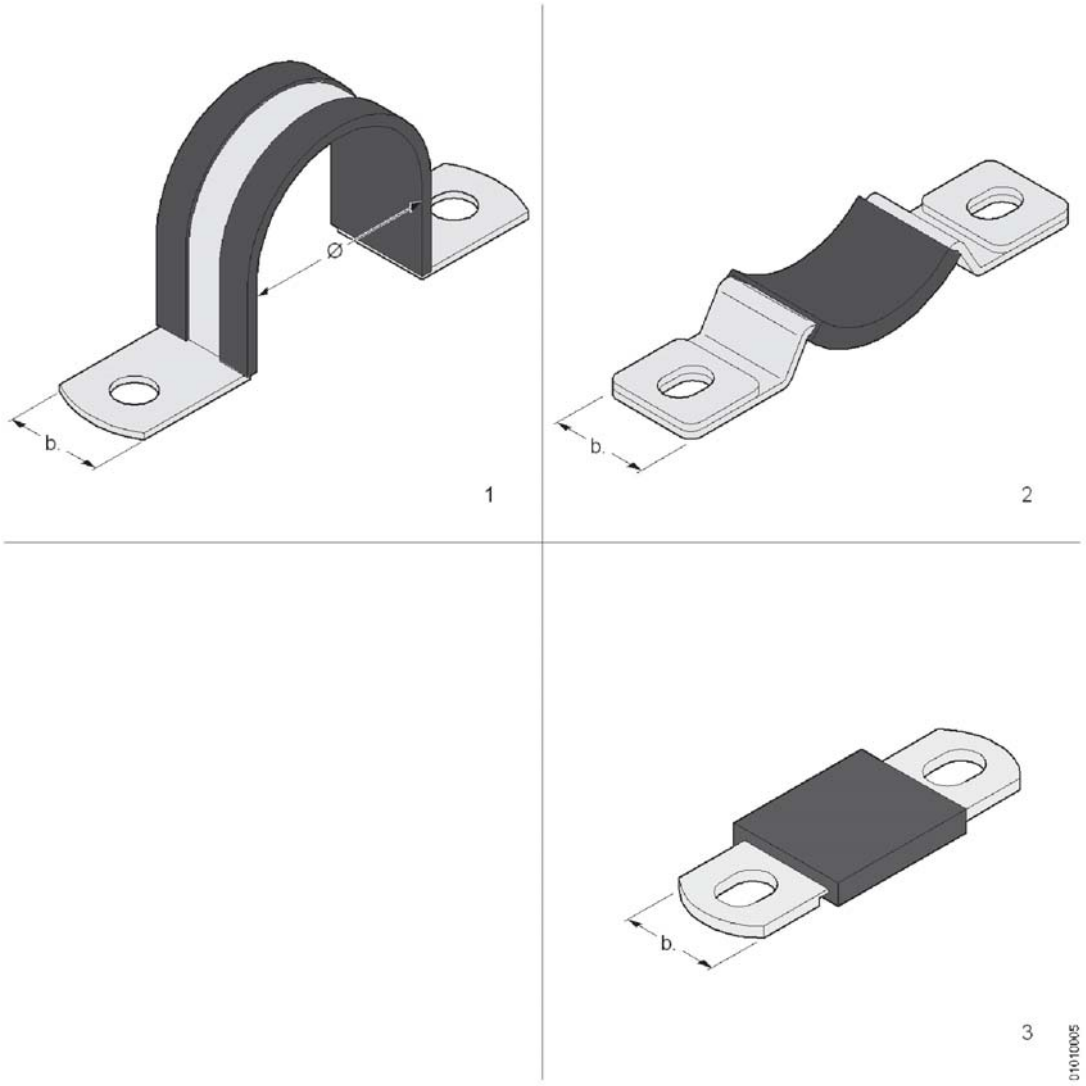

Pos.	Q.	Part n°	Description	Specification
		10934006	Line clip	Ø28 b.=15mm MAT: IN
		10934007	Line clip	Ø34 b.=15mm MAT: IN
		11093252	Line clip	Ø35 b.=15mm MAT: IN
		10934008	Line clip	Ø38 b.=15mm MAT: IN
		10934010	Line clip	Ø38 b.=25mm MAT: IN

Line clips

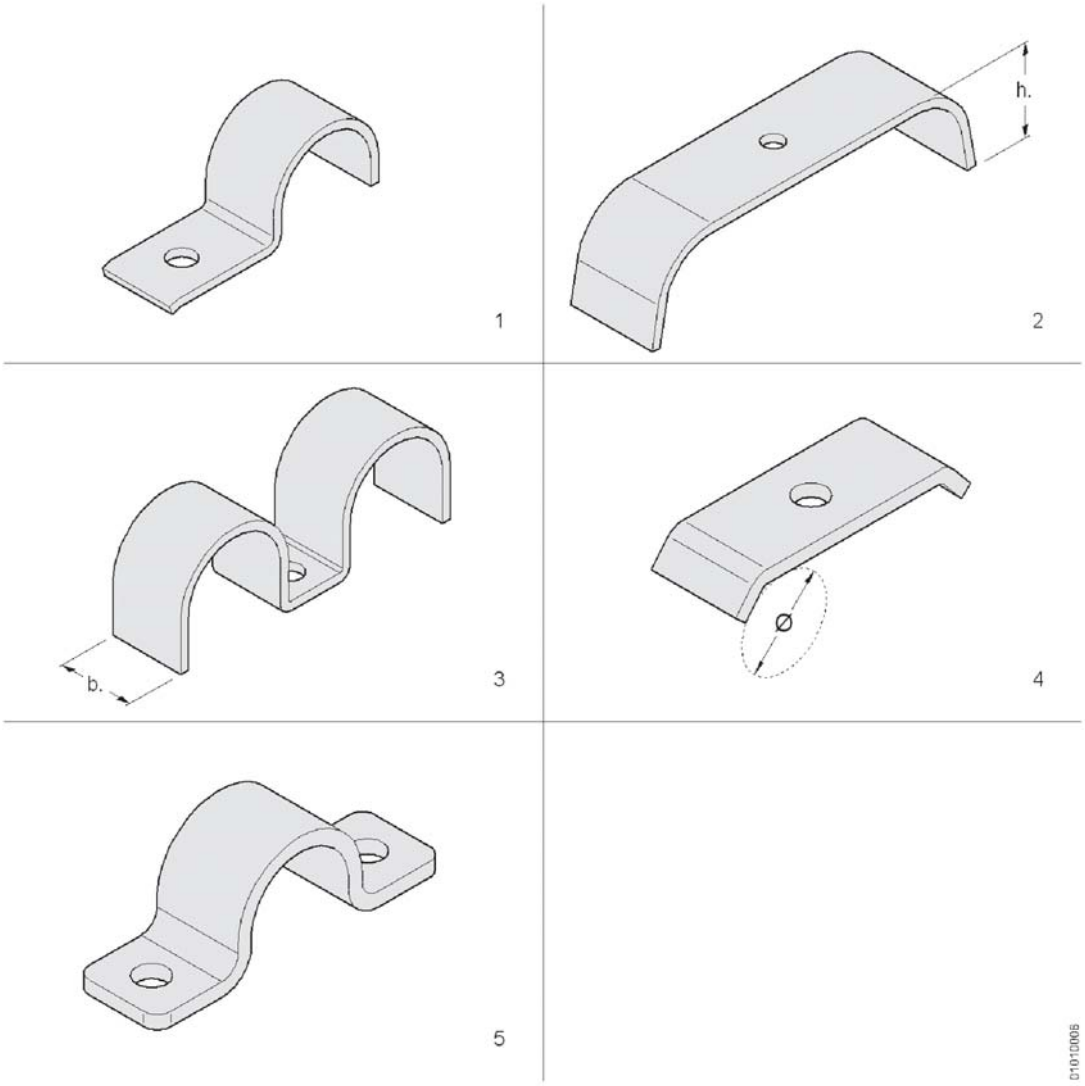

Pos.	Q.	Part n°	Description	Specification
1	#	637100680	Line clip	DIN 1596 Ø28 MAT: ST
		612204020	Line clip	DIN 1596 Ø30 MAT: ST
		10909124	Line clip	DIN 1596 Ø31 MAT: ST
		637100690	Line clip	DIN 1596 Ø33 MAT: ST
		637101190	Line clip	DIN 1596 Ø39 MAT: ST
2	#	625100760	Line clip	2xØ22 MAT: ST
		637102760	Line clip	2xØ26 h.=8mm MAT: ST
		637100750	Line clip	2xØ26 h.=21mm MAT: ST
		625100770	Line clip	2xØ28 MAT: ST
		625100780	Line clip	2xØ34 MAT: ST
3	#	627100140	Line clip	2xØ22 b.=20mm MAT: ST
		627100200	Line clip	2xØ22 b.=25mm MAT: ST
		627100150	Line clip	2xØ28 b.=20mm MAT: ST
		627100160	Line clip	2xØ34 b.=25mm MAT: ST
4	#	625101010	Line clip	2xØ20 MAT: ST
5	#	10929731	Line clip	Ø23 MAT: ST
		10929695	Line clip	Ø31 MAT: ST
		11102925	Line clip	Ø36 MAT: ST

Line clips

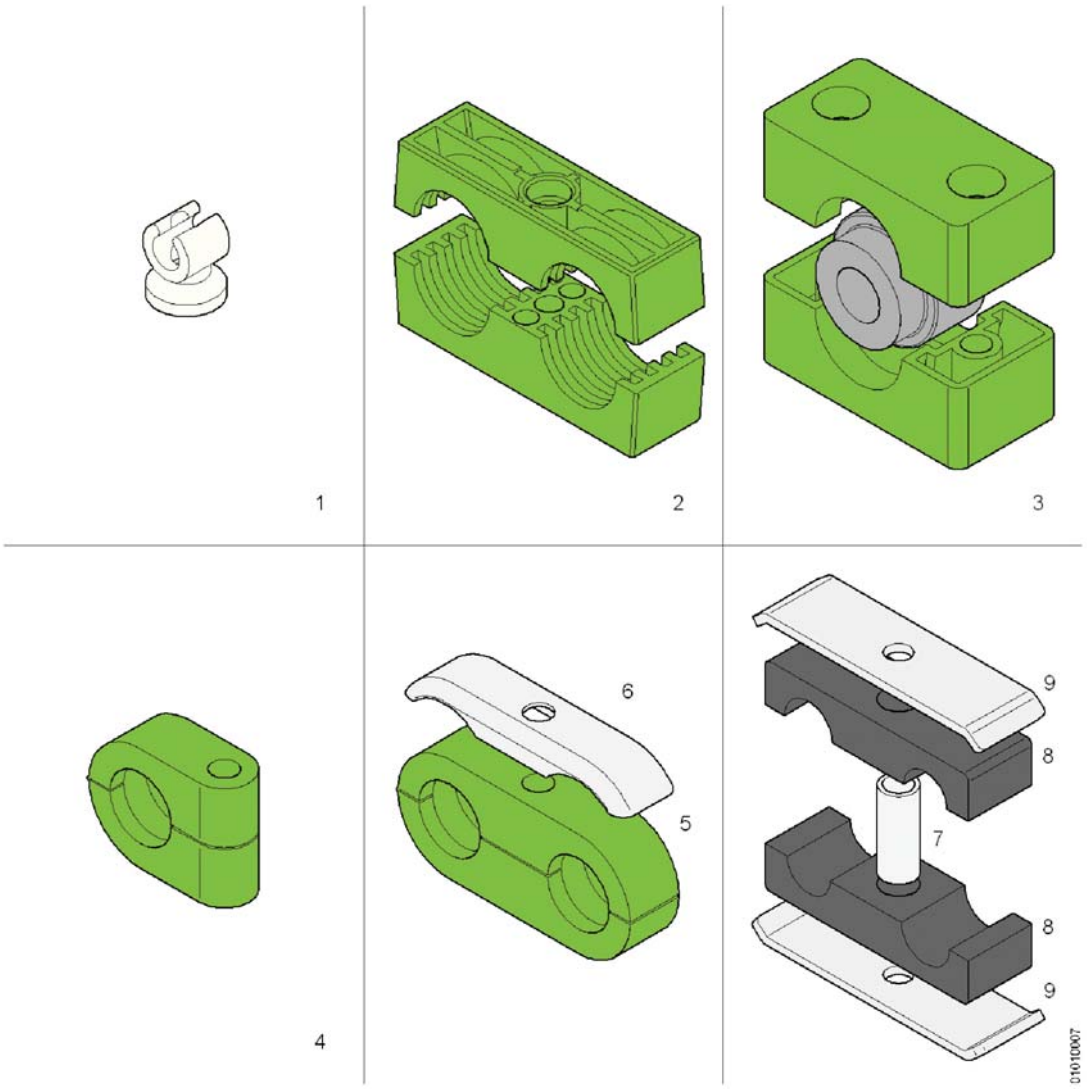

Pos.	Q.	Part n°	Description	Specification
1	#	637100970	Line clip	Ø8mm M6 MAT:P
2	#	10989738	Line clip	2xØ14mm MAT: P (Z)
		10707225	Line clip	2xØ22mm MAT: P (Z)
		10707215	Line clip	2xØ22mm MAT: P (GN)
		10707228	Line clip	2xØ28mm MAT: P (Z)
		10707218	Line clip	2xØ28mm MAT: P (GN)
		10707223	Line clip	2xØ33,7mm MAT: P (GN)
		11244251	Line clip	2xØ35mm MAT: P (GN)
3	#	11039801	Line clip	Ø12,7 b.=30 l.=59mm MAT: P (Z)
		10930871	Clamp	Ø16 b.=30mm l.=59mm MAT: P (Z)
		11003090	Line clip	Ø17,2 b.=30 l.=59mm MAT: P (Z)
		10930873	Line clip	Ø22 b.=30 l.=86mm MAT: P (GN)
		10924128	Line clip	Ø50 b.=30 l.=86mm MAT: P (Z)
		10709428	Line clip	Ø60 b.=30 l.=121mm MAT: P (Z)
4	#	10930779	Line clip	Ø16mm MAT: P (GN)
		637102710	Line clip	Ø18mm MAT: P (Z)
5	#	637101700	Line clip	Ø10-Ø10mm MAT: P (Z)
		637101650	Line clip	Ø15-Ø15mm MAT: P (Z)

Line clips

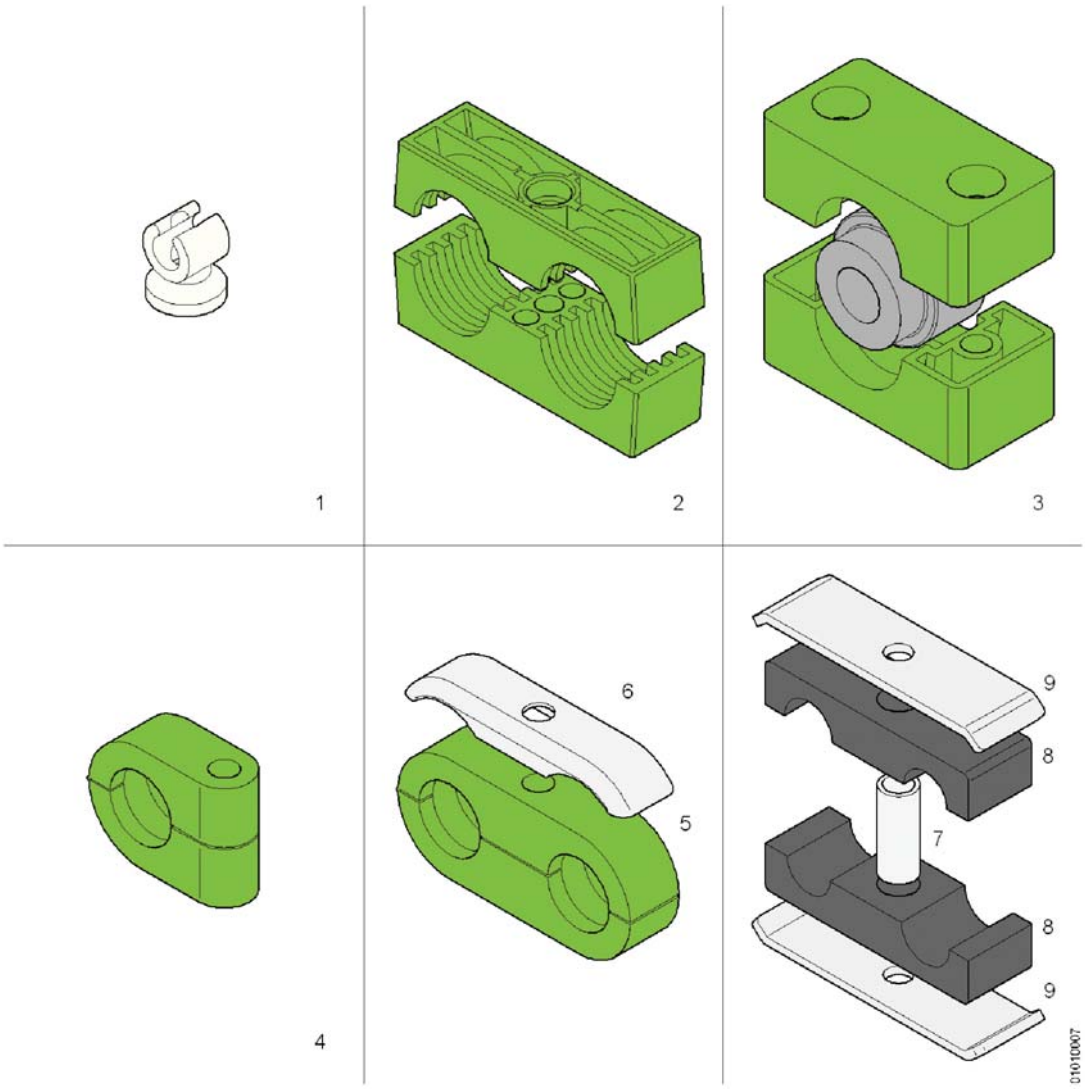

Pos.	Q.	Part n°	Description	Specification
		637102080	Line clip	Ø15-Ø18mm MAT: P (Z)
		637101690	Line clip	Ø18-Ø18mm MAT: P (Z)
		637102290	Line clip	Ø18-Ø20mm MAT: P (Z)
		11316020	Line clip	Ø18-Ø21,3mm MAT: P (Z)
		11240476	Line clip	Ø18-Ø22mm MAT: P (Z)
6	#	10930801	Reinforcement	62,5x16 - Ø6,8mm MAT: ST
7	#	11146408	Bush	Ø12xØ9 l.=30mm MAT: ST
8	#	11146406	Line clip	Ø17-Ø19mm MAT: P (Z)
9	#	11146409	Reinforcement	90,4x26 - Ø8,5mm MAT: ST

Fire protection and fire extinguishing equipment

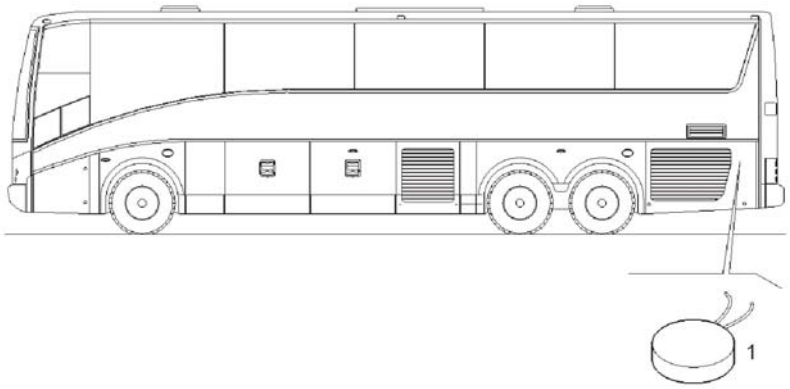

Pos.	Q.	Part n°	Description	Specification
1	2	10766487	Temperature sensor	150 ° C

Tool kit ( )

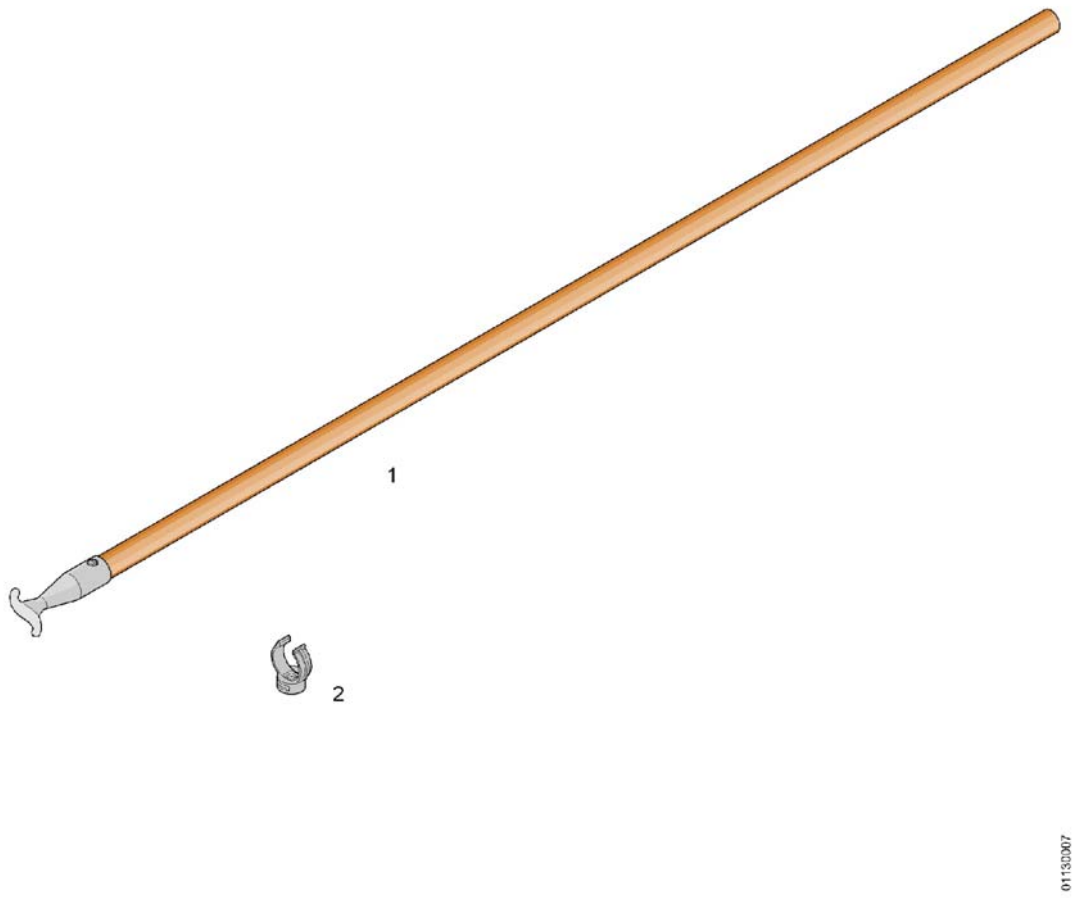

Pos.	Q.	Part n°	Description	Specification
1	1	10908807	Hook	(Z)
2	#	660767013	Clamp	(GS) Ø32

Engine

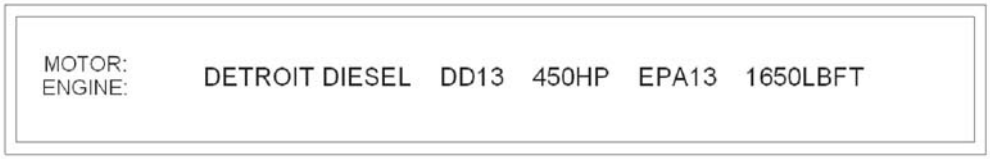

0201010063

Pos.	Q.	Part n°	Description	Specification
1	1	11288724	Engine	Detroit Diesel DD 13 EPA13

Rubber-metal mounts

CX45
TX45

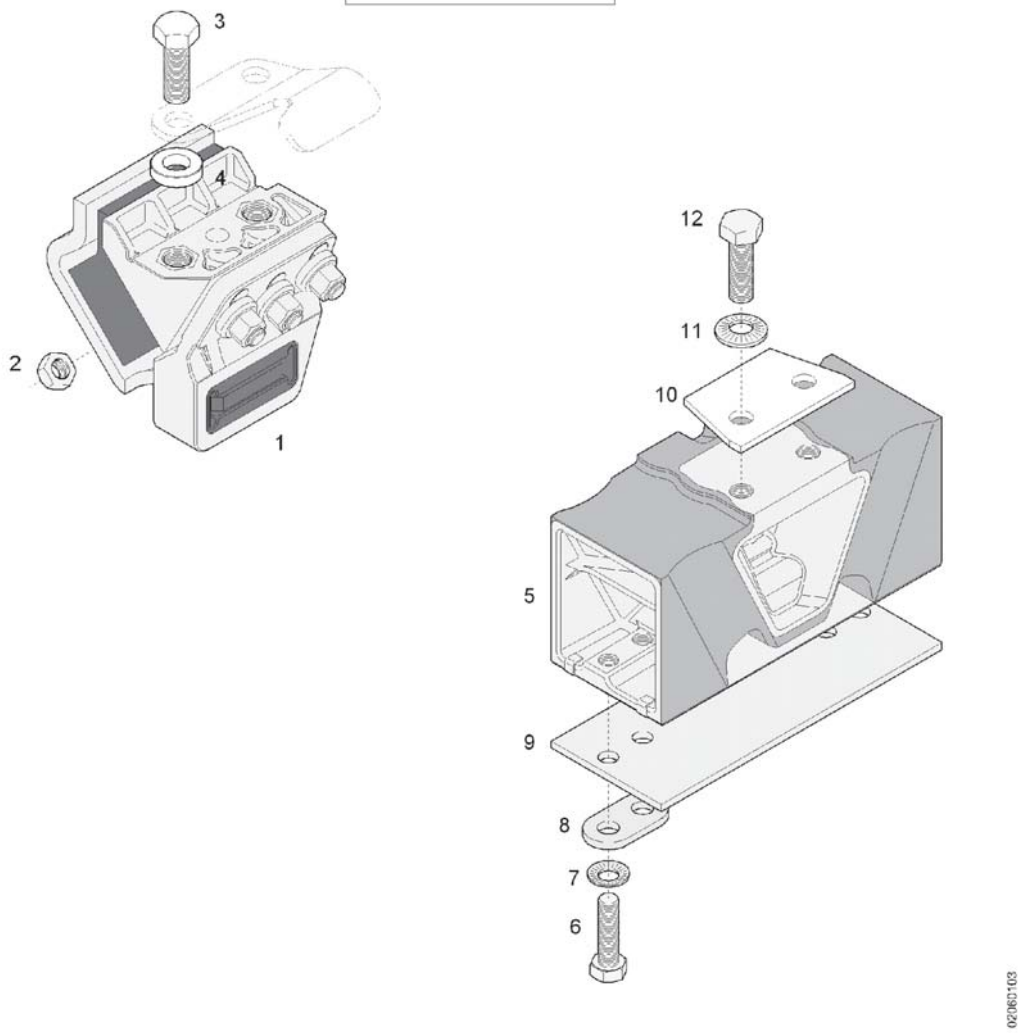

Pos.	Q.	Part n°	Description	Specification
1	2	11145042	Rubber-metal mount	65 Shore A (Z RAL 9005)
2	4	660207413	Lock nut	DIN 980 M12x1,5 k.=8
3	4	660219763	Screw	DIN 961 M16x1,5x45 k.=8.8
4	4	10593964	Washer	Ø32xØ17x8
5	2	11222467	Rubber-metal mount	60 Shore A (B RAL 5005)
6	8	10690621	Screw	DIN 961 M12x1,5x45 k.=8.8
7	8	10580793	Coil spring lock washer	A12
8	4	10594483	Spacer	58x30x5
9	2	10622555	Spacer plate	230x90x5mm
10	4	10535885	Spacer	d.=5mm
11	4	10564612	Coil spring lock washer	A14
12	4	660219750	Screw	DIN 961 M14x1,50x45 k.=8.8

Throttle control

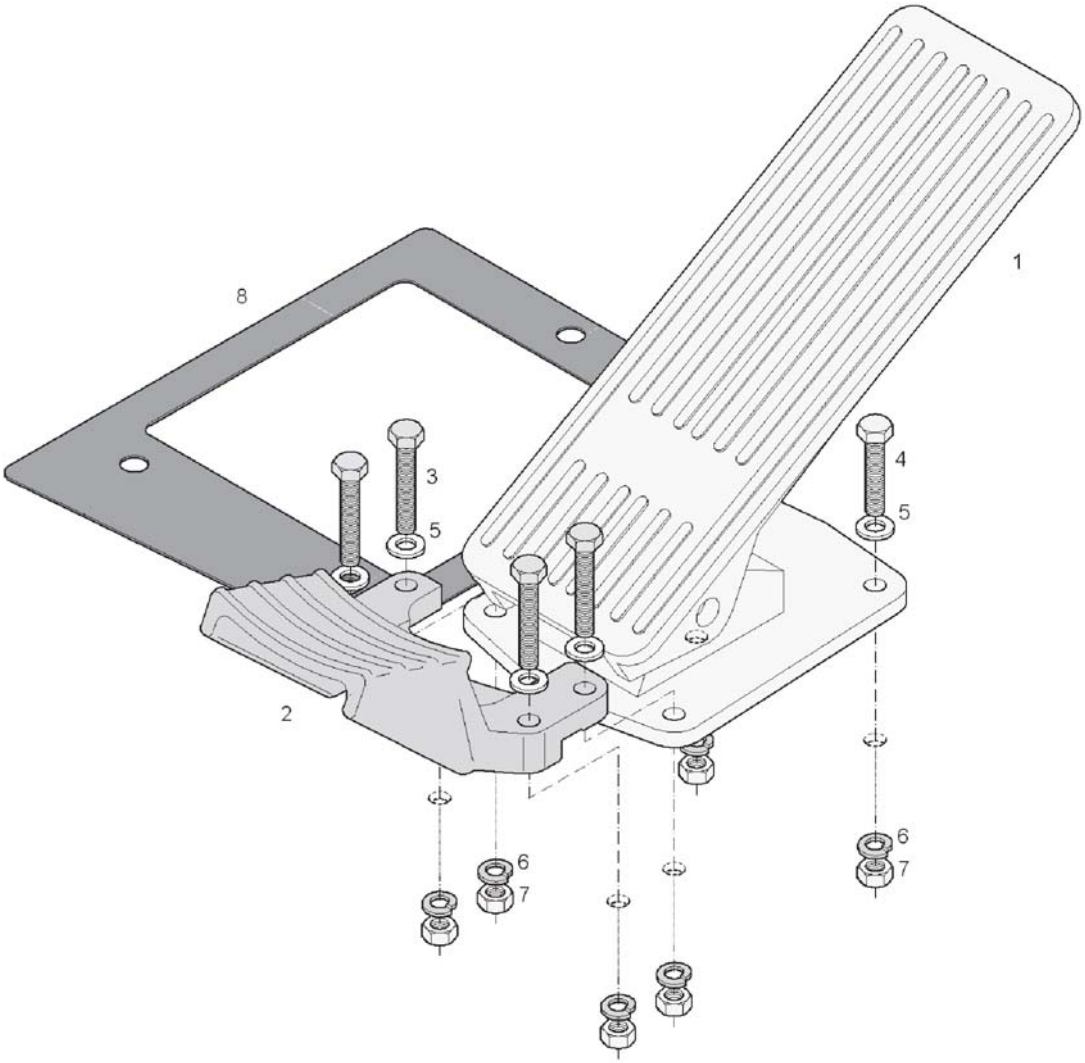

Pos.	Q.	Part n°	Description	Specification
1	1	11051664	Accelerator pedal	
2	1	10870249	Foot rest	
3	4	660229759	Screw	DIN 933 M6x1x40 MAT:IN
4	2	660229757	Screw	DIN 933 M6x1x30 MAT:IN
5	6	660623507	Washer	DIN 125 6,4x12,5x1,6 MAT:IN
6	6	11354416	Washer	M6 MAT:IN
7	6	660209922	Nut	DIN 934 M6x1 MAT:IN
8	1	11248424	Seal	

Fuel tank

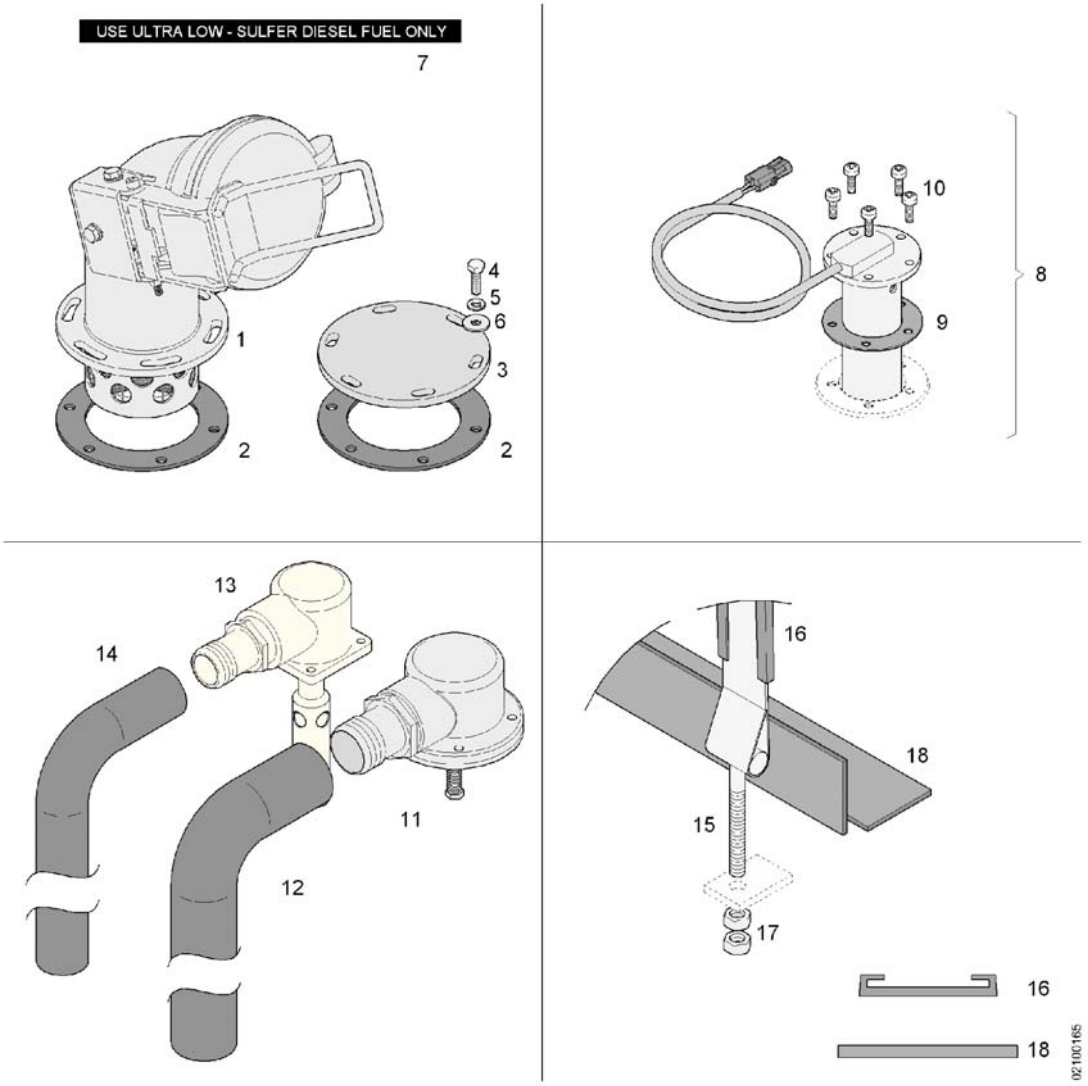

Pos.	Q.	Part n°	Description	Specification
1	1	91080627	Filler pipe	
2	2	621203470	Gasket	Ø115xØ76x3 MAT:R
3	1	10540146	Flange	Ø115x6
4	12	660220304	Screw	DIN 933 M6x1x20 k.=8.8
5	12	660636300	Coil spring lock washer	DIN 127 Ø6
6	12	660623501	Washer	DIN 9021 6,4x18x1,6
7	1	11080620	Decal	"use ultra-low-sulfur diesel only"
		-		
8	1	10997262	Float	l.=850mm
9	*1	11087510	Sealing washer	MAT: R
10	*5	11323260	Screw	M5x16mm
		-		
11	2	10703651	Relief valve	
12	2	10706300	Elbow	Ø34 MAT:R
13	1	10703654	Valve	
14	1	10706296	Elbow	Ø25 MAT:R
15	2	10577896	Clamp	MAT:IN
16	#m	10603753	Rubber section	46x7

Fuel tank

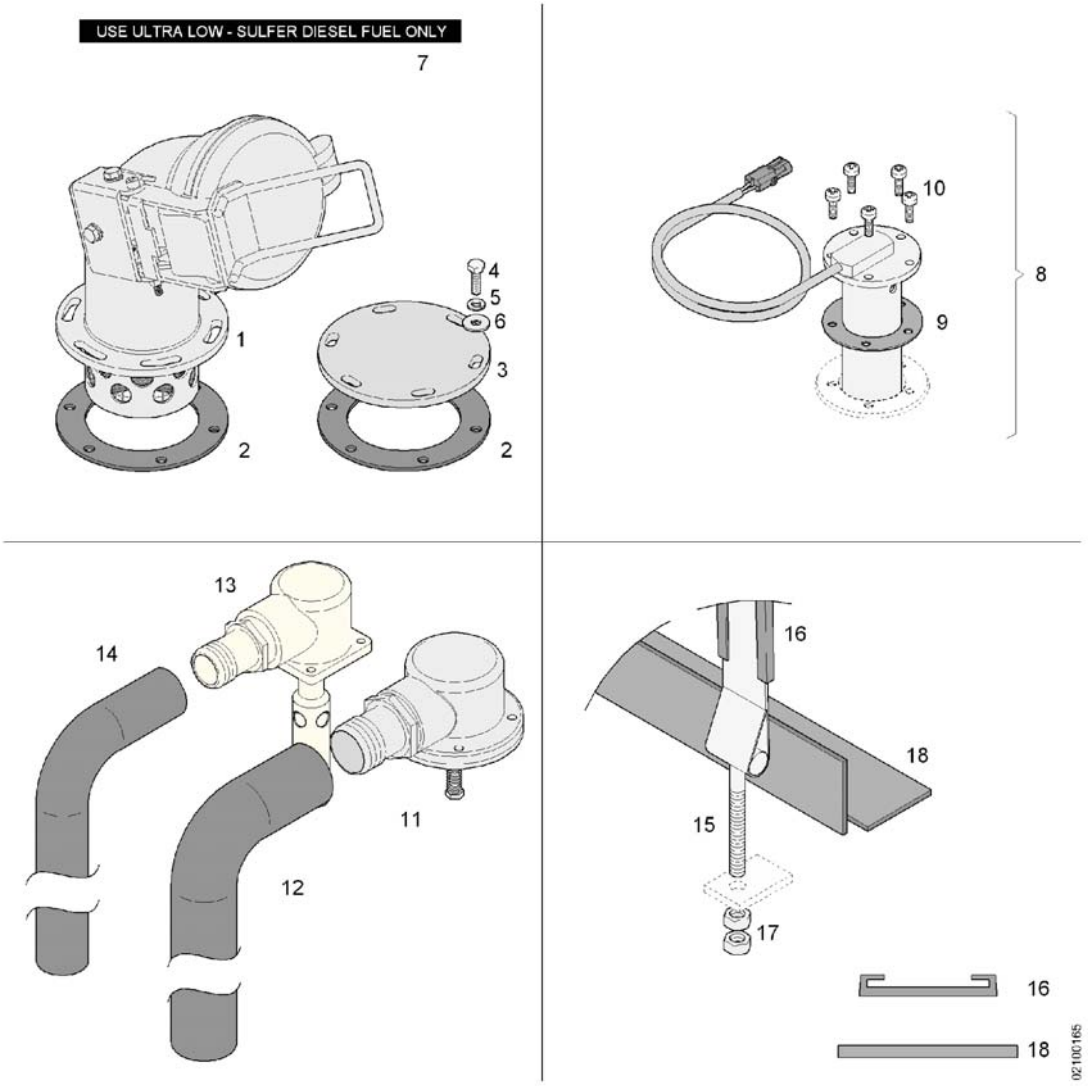

Pos.	Q.	Part n°	Description	Specification
17	8	660209924	Nut	DIN 934 M10 MAT:IN
18	#m	621201940	Rubber section	60x4

Filler pipe

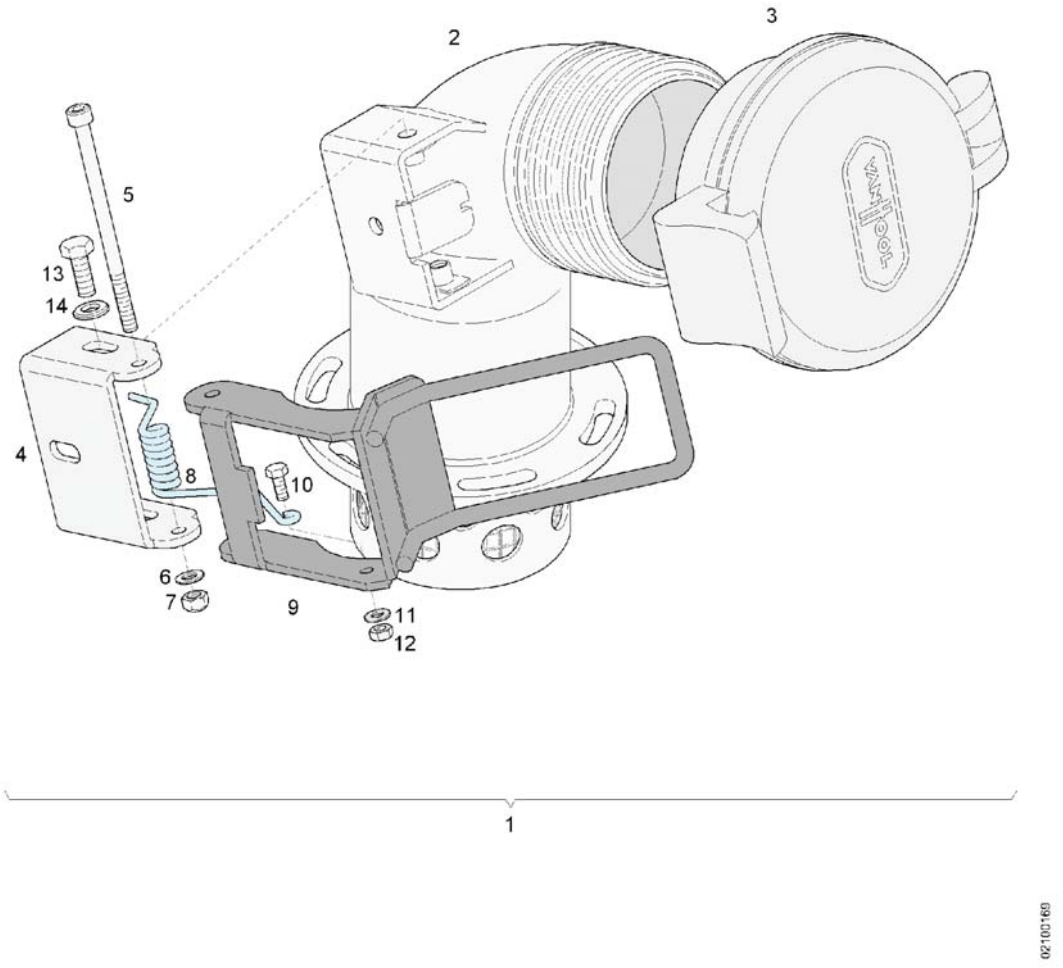

Pos.	Q.	Part n°	Description	Specification
1	1	91080627	Filler pipe	
		-		
2	*1	91080628	Filler pipe	
3	*1	11324669	Filler cap	
4	*1	10700743	Bracket	
5	*1	10701117	Screw	DIN 912 M5x0,8x80 MAT:IN
6	*1	10663824	Washer	DIN 125 M5 MAT:IN
7	*1	10600835	Lock nut	DIN 980 M5 MAT:IN
8	*1	10700827	Spring	Ø2,5mm
9	*1	10700848	Grab handle	
10	*1	10653675	Screw	DIN 933 M4x0.70x10mm
11	*1	10553000	Washer	DIN 125 M4 MAT:IN
12	*1	660209902	Nut	DIN 934 M4x0.70 MAT:IN
13	*3	660229752	Screw	DIN 933 M6x16 MAT:IN
14	*3	660623507	Washer	DIN 125 6,4x12,5x1,6 MAT:IN

Fuel filter

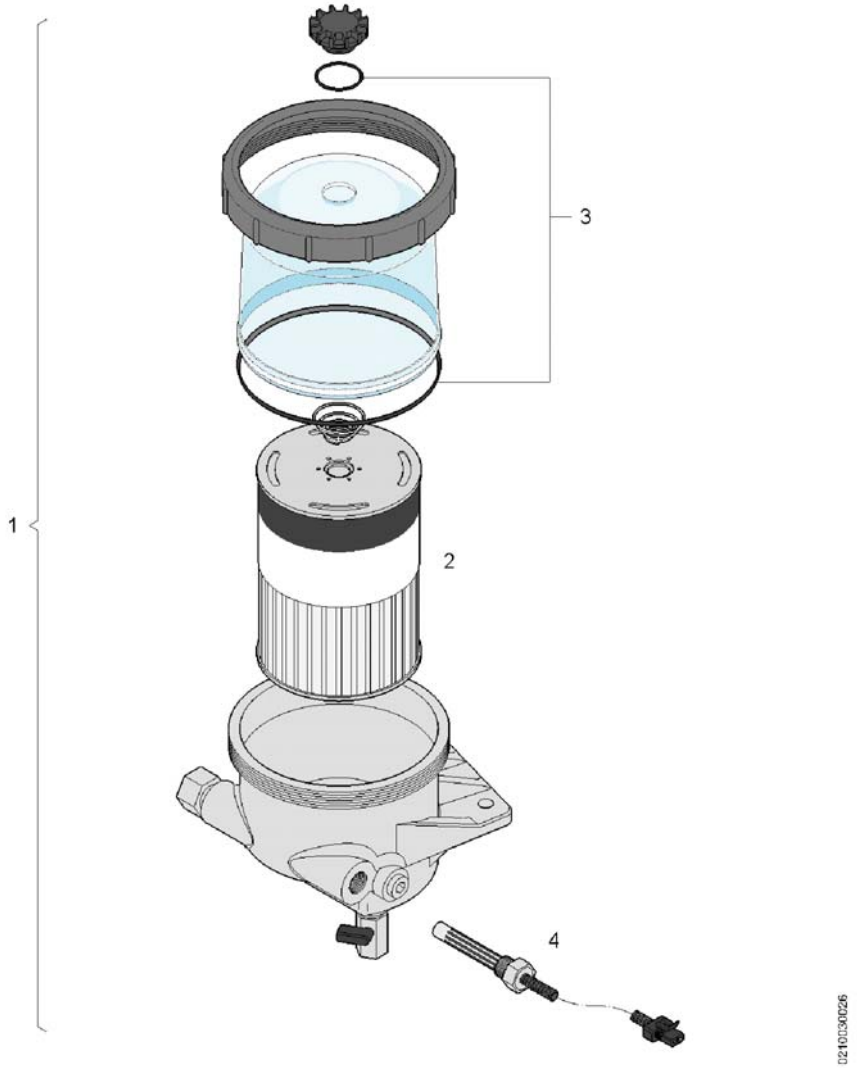

Pos.	Q.	Part n°	Description	Specification
1	1	11402101	Fuel filter	
2	*1	11410169	Filter element	7µ
3	*1	11410173	Set of seals	
4	*1	11407920	Heating element	24V 195W PTC

Fuel pipes

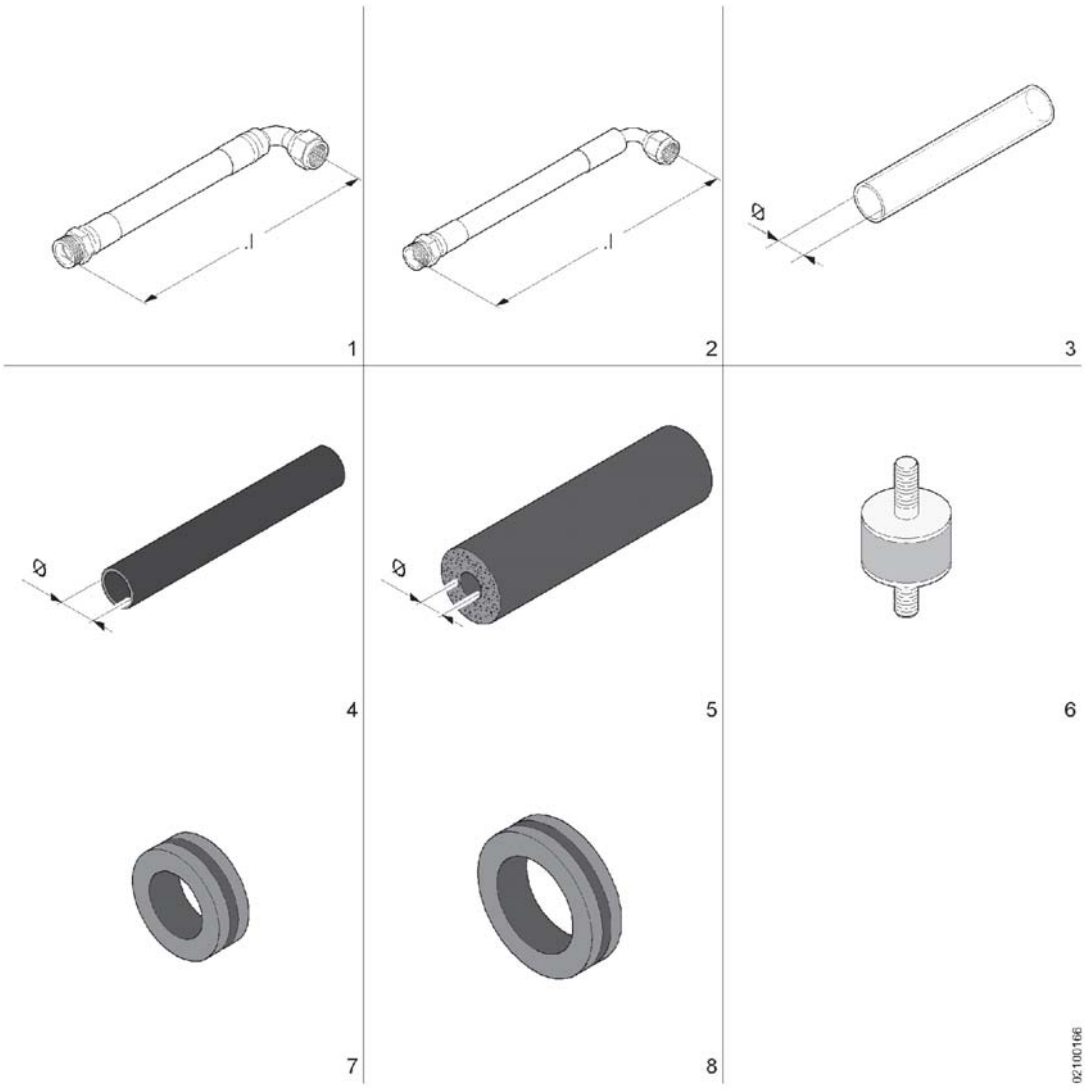

Pos.	Q.	Part n°	Description	Specification
1	1	11208254	Hose	M26x1,5 - 7/8" l.=4050mm
2	1	11208245	Hose	M22x1,5 - 3/4" l.=3950mm
3	#m	10777793	Hose	Ø18x1,5 MAT:P (T)
4	#m	11318582	Hose	Ø15x1,5 MAT:P (Z)
5	2	11283773	Insulating material	Ø28 l.=2m
6	1	10514417	Rubber-metal mount	M8-Ø30x20mm 65 Shore A
7	1	660779105	Grommet	MAT:R Ø25
8	3	660779106	Grommet	MAT:R Ø35

Fuel supply

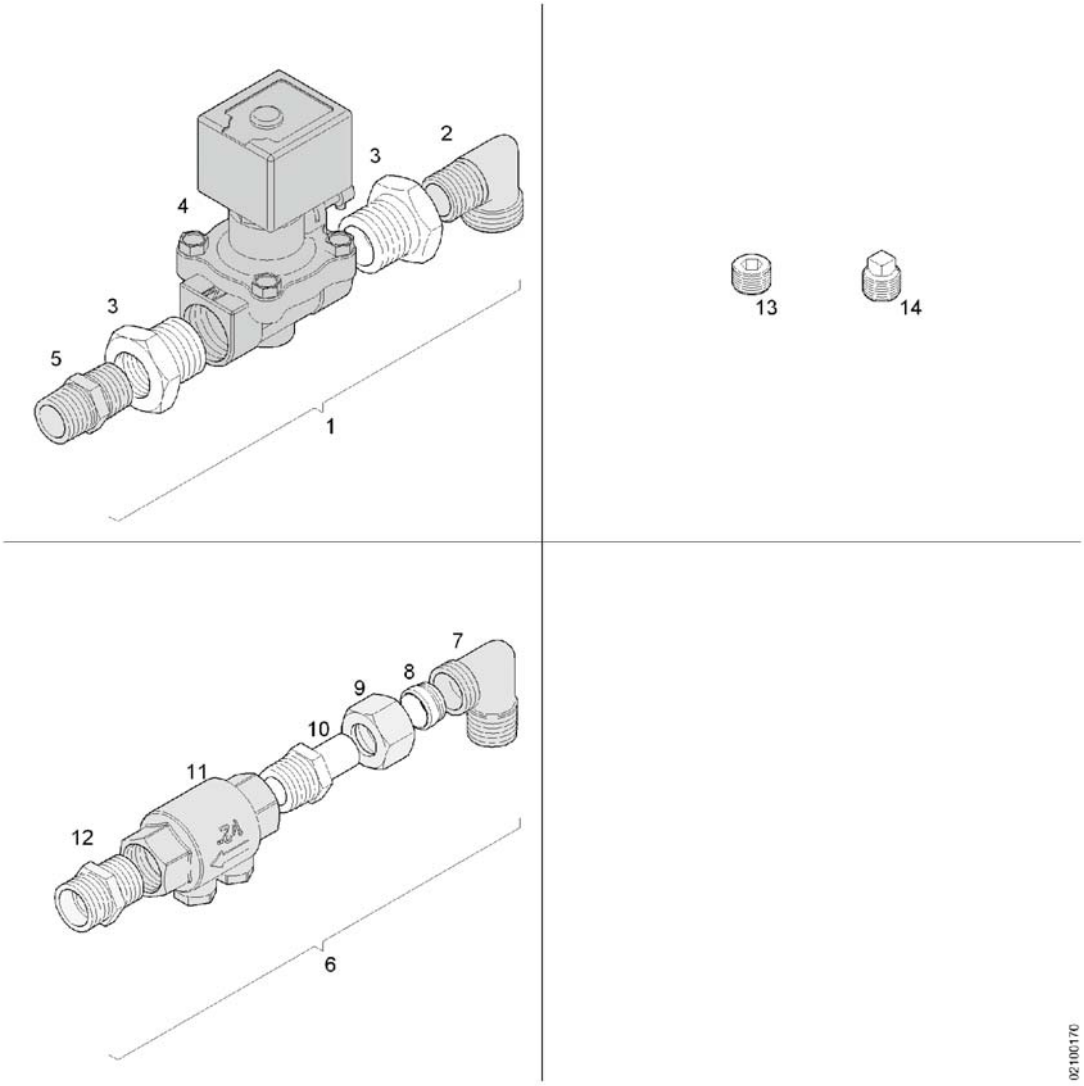

Pos.	Q.	Part n°	Description	Specification
1	1	11232047	Valve + accessories	3/4"
2	*1	10594220	Coupling	1/2"xØ18
3	*2	10834192	Connecting nipple	3/4" x 1/2" MF
4	*1	11167220	Solenoid shut-off valve	
5	*1	10547706	Coupling	1/2" MM
		-		
6	1	11218826	One-way valve + accessories	1/2"
7	*1	637315740	Coupling	1/2"xØ15
8	*1	637310010	Cutting ring	Ø15
9	*1	637305260	Coupling nut	M22x1,5-Ø15
10	*1	10832707	Coupling	Ø15-1/2"BSP
11	*1	11220604	One-way valve	1/2"
12	*1	637307210	Coupling	L15(M22x1.5-Ø15)-(1/2NPT)(ST)
		-		
13	1	631201430	Screw-in plug	3/8" NPTF
14	6	660567601	Plug	1/4"

Starter

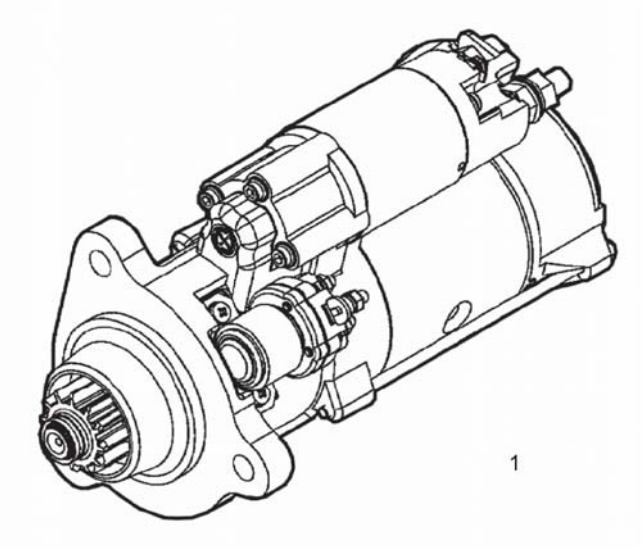

Pos.	Q.	Part n°	Description	Specification
1	1	11205455	Starter	
2	3	10580793	Coil spring lock washer	A12
3	3	660207413	Lock nut	DIN 980 M12x1,5 k.=8

Air filter

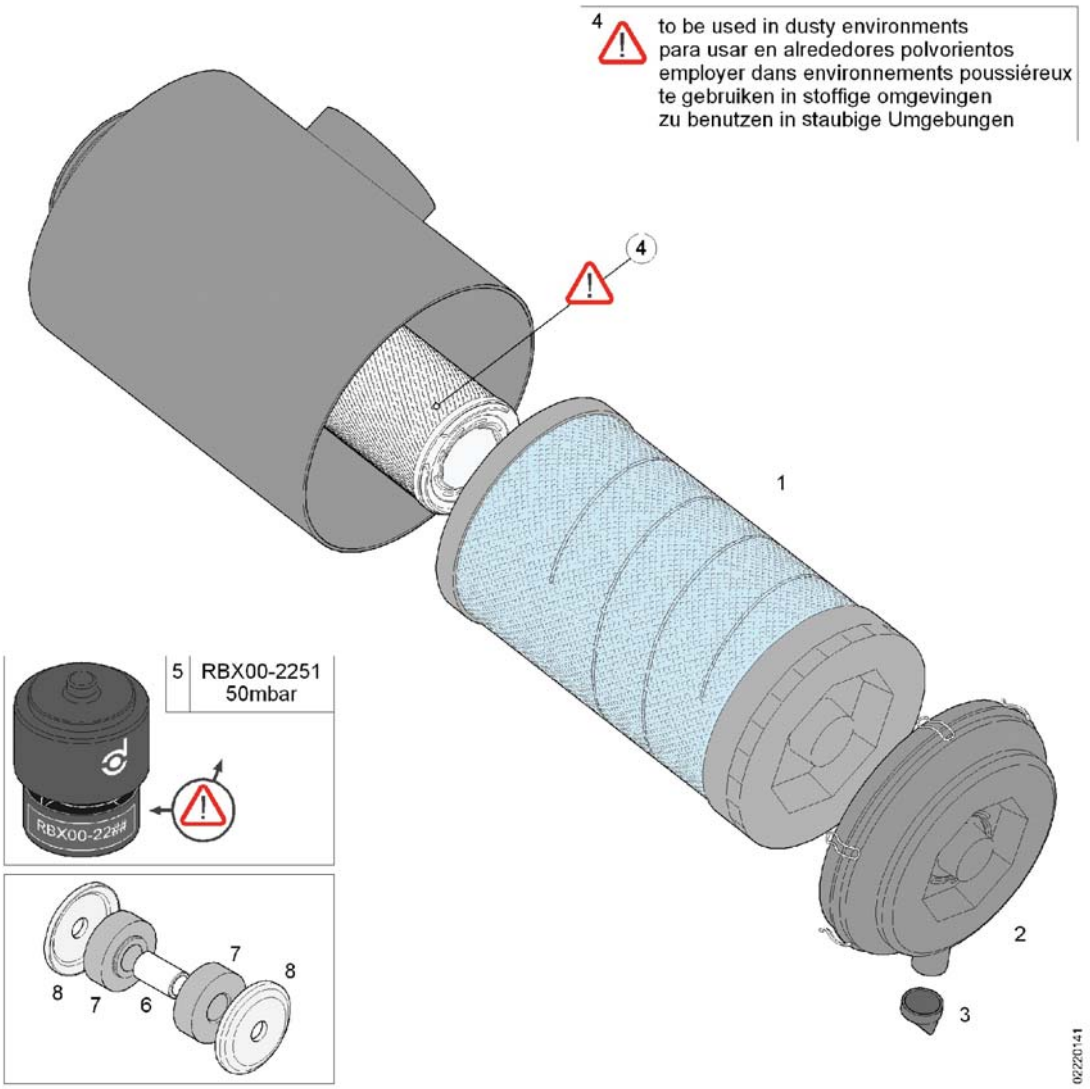

Pos.	Q.	Part n°	Description	Specification
1	1	11179604	Filter element	
2	1	11227459	Cover	
3	1	10575178	Valve	
4	1	10858368	Filter element	Ø174 - l.=558
5	1	631200570	Service indicator	50mbar
6	4	611400360	Bush	Ø14xØ10,5x25
7	8	621400070	Rubber	
8	8	643002430	Disk	Ø47,5x6 MAT:IN

Silicon hoses, straight

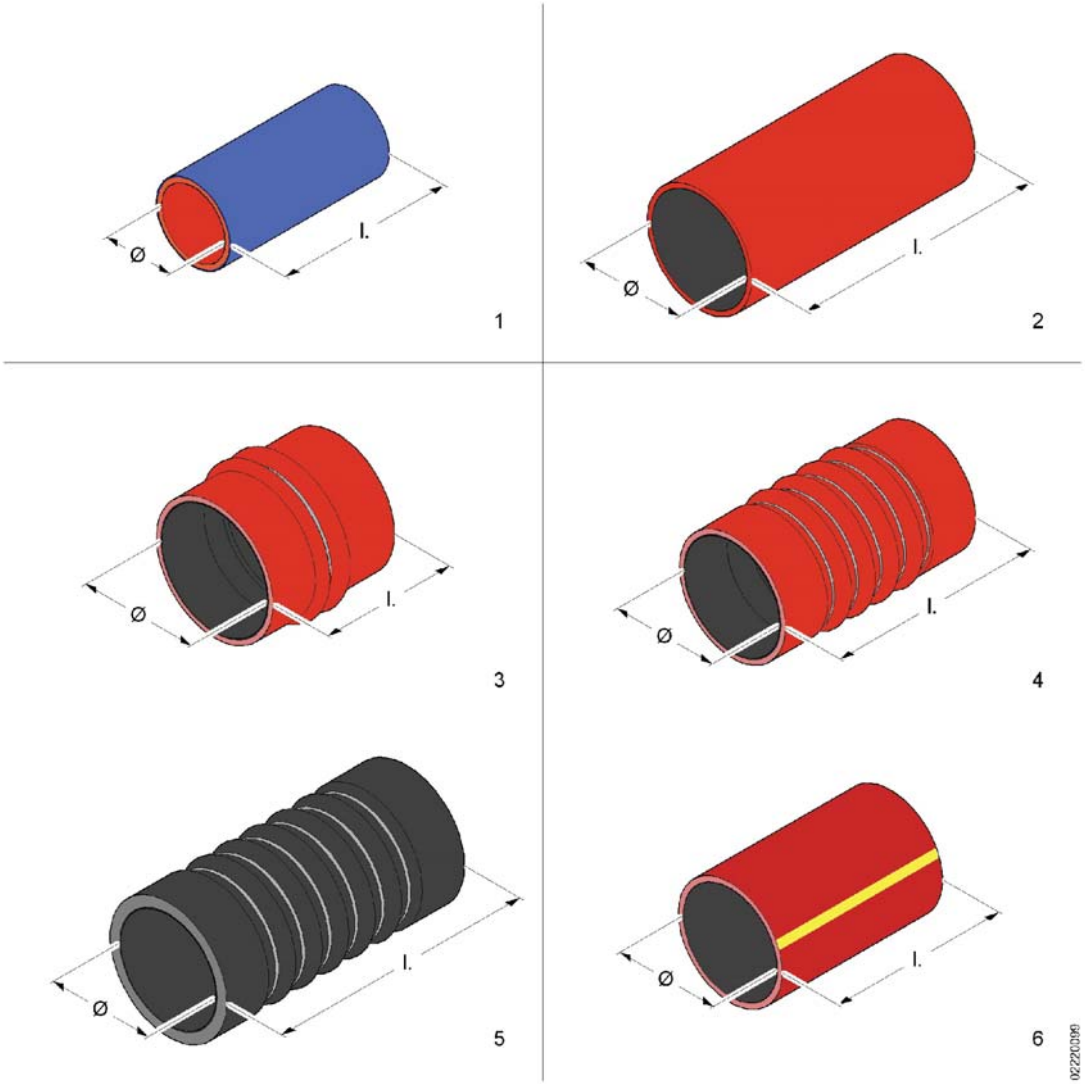

Pos.	Q.	Part n°	Description	Specification
1	#	11145297	Silicon hose	Ø60 l.=150mm (B)
		-		
2	#	11053298	Silicon hose	Ø100 l.= 1m (R)
		-		
3	#	10615685	Silicon hose	Ø100 l.=115mm (R)
		11051861	Silicon hose	Ø150 l.= 110mm (R)
		-		
4	#	11119220	Silicon hose	Ø76 l.=240mm (R)
		10881462	Silicon hose	Ø90 l.= 180mm (R)
		10753168	Silicon hose	Ø100 l.= 225mm (R)
		11039658	Silicon hose	Ø100 l.=255mm (R)
		11153393	Silicon hose	Ø130 l.= 210mm (R)
		-		
5	#	10840952	Silicon hose	Ø65 l.=180mm (Z)
		-		
6	#	10773711	Silicon hose	Ø76 l.=1m (R)
	#	10959300	Silicon hose	Ø90 l.=1m (R)
	#	10955630	Silicon hose	Ø100 l.=1m (R)

Silicon hoses, adapter

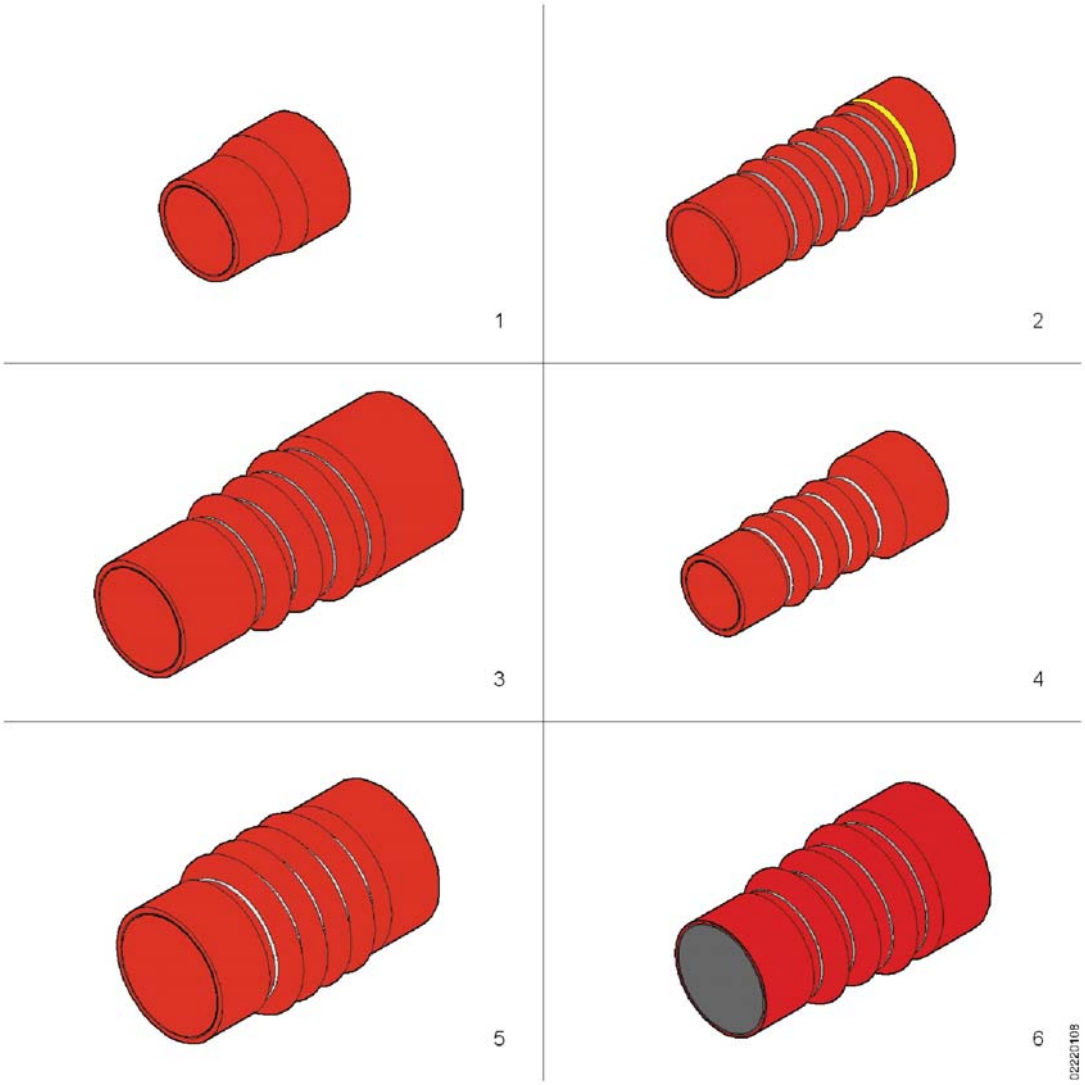

Pos.	Q.	Part n°	Description	Specification
1	#	10608380	Silicon hose	Ø65xØ76 l.=100mm (R)
		-		
2	#	10845325	Silicon hose	Ø60xØ65 l.=200mm (R)
		10953250	Silicon hose	Ø65xØ76 l.=165mm (R)
		-		
3	#	10894977	Silicon hose	Ø76xØ100 l.=250mm (R)
		-		
4	#	10796379	Silicon hose	Ø50xØ65 l.=180mm (R)
		-		
5	#	10737574	Silicon hose	Ø90xØ100 l.=200mm (R)

Silicon hoses, elbow

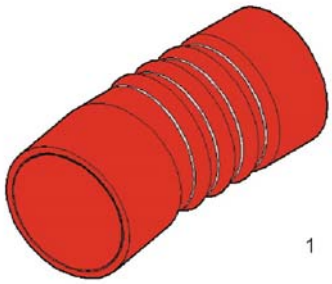

Pos.	Q.	Part n°	Description	Specification
1	#	10969821	Silicon hose	Ø90xØ90 l.=210mm (R)
		11040287	Silicon hose	Ø100xØ100 l.=264mm (R)

Piping

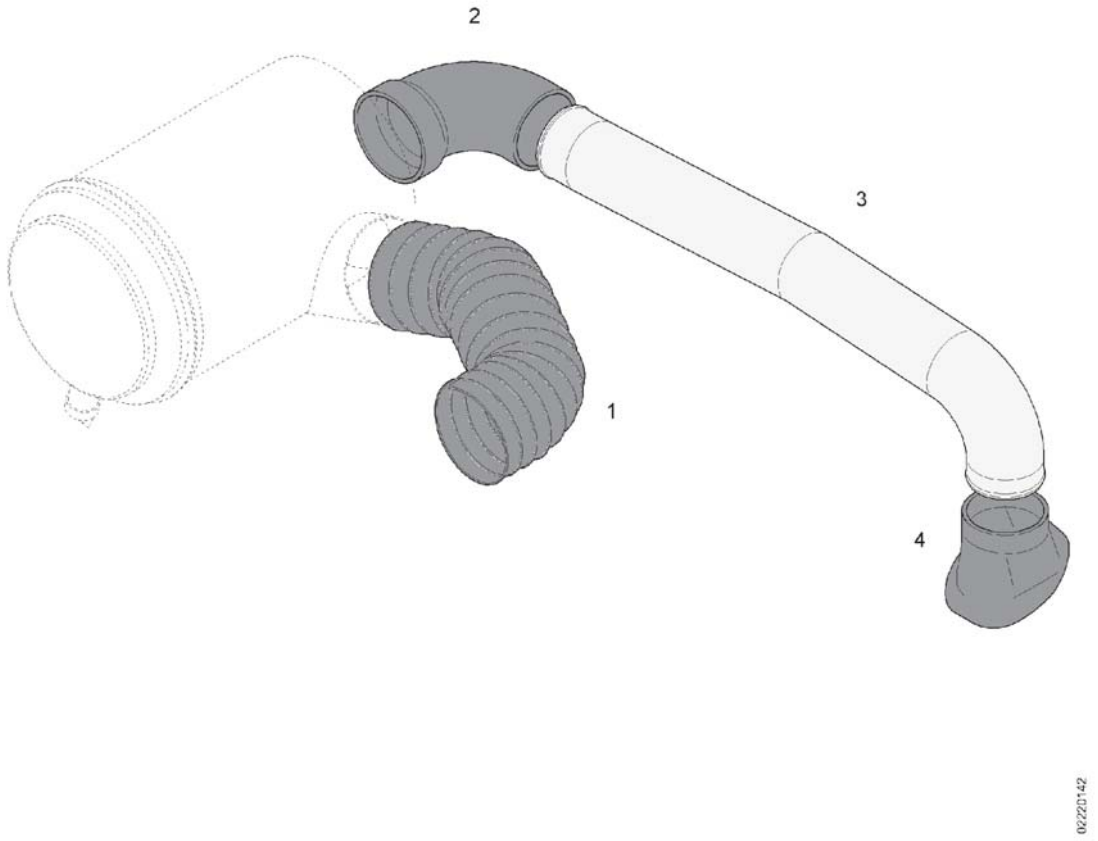

Pos.	Q.	Part n°	Description	Specification
1	l.=750	10576884	Hose	Ø181 MAT:P (Z)
2	1	621205720	Elbow	Ø130xØ150x90° MAT:R
3	1	11208074	Pipe	
4	1	11203452	Elbow	Ø127-90° MAT:R

Piping

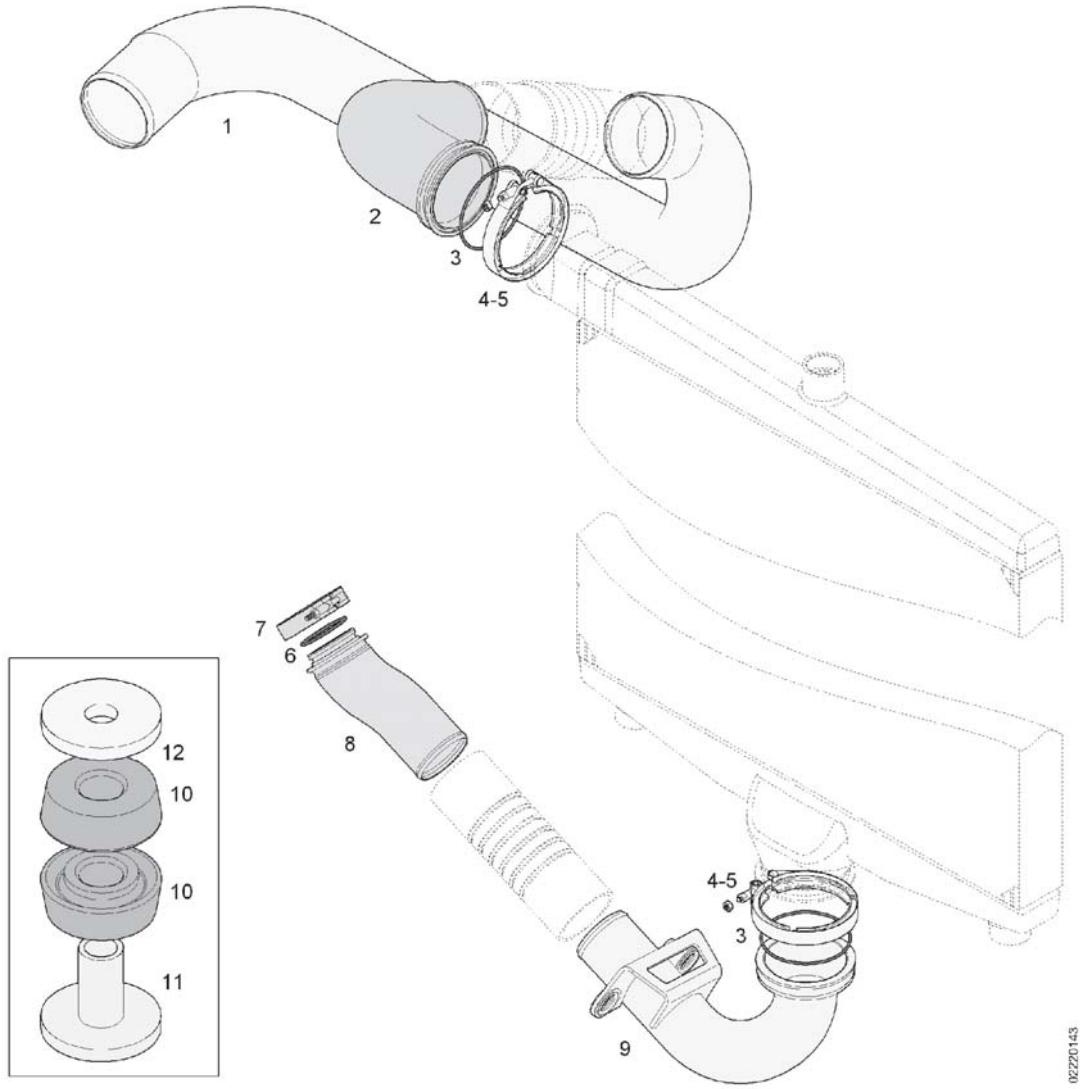

Pos.	Q.	Part n°	Description	Specification
1	1	11200140	Pipe	
2	1	11200139	Pipe	
3	2	10854597	O-ring	Ø105x3
4	2	10572496	Clamp	Ø124mm
5	2	10997189	Nut	1/4"-28 UNF MAT: IN
6	1	11208795	O-ring	Ø58x3,5
7	1	11208794	Clamping ring	
8	1	11205524	Pipe	
9	1	11261272	Pipe	
10	12	10581374	Silentbloc	Ø40
11	6	10581371	Spacer	
12	6	10581372	Spacer ring	Ø40xØ11x5mm

Charge air cooler

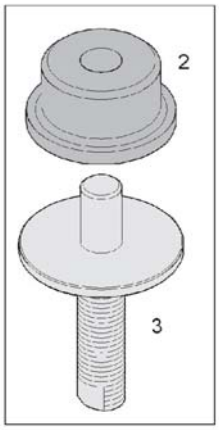

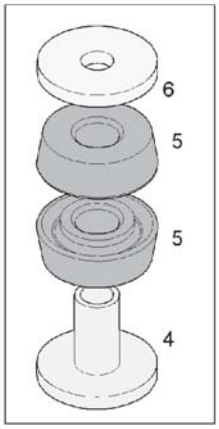

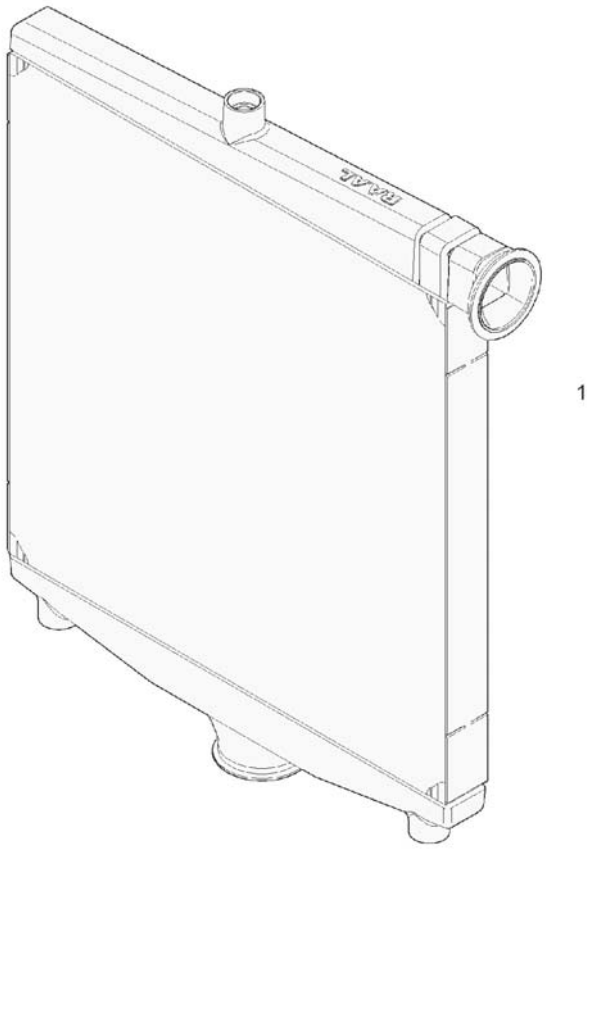

Pos.	Q.	Part n°	Description	Specification
1	1	11237998	Charge air cooler	MAT:AL
2	3	11072525	Silentbloc	Ø40 MAT:SI
3	2	11087557	Stud	M16 l.=87mm
4	1	10581371	Spacer	
5	2	10581374	Silentbloc	Ø40
6	1	10581372	Spacer ring	Ø40xØ11x5mm

Piping

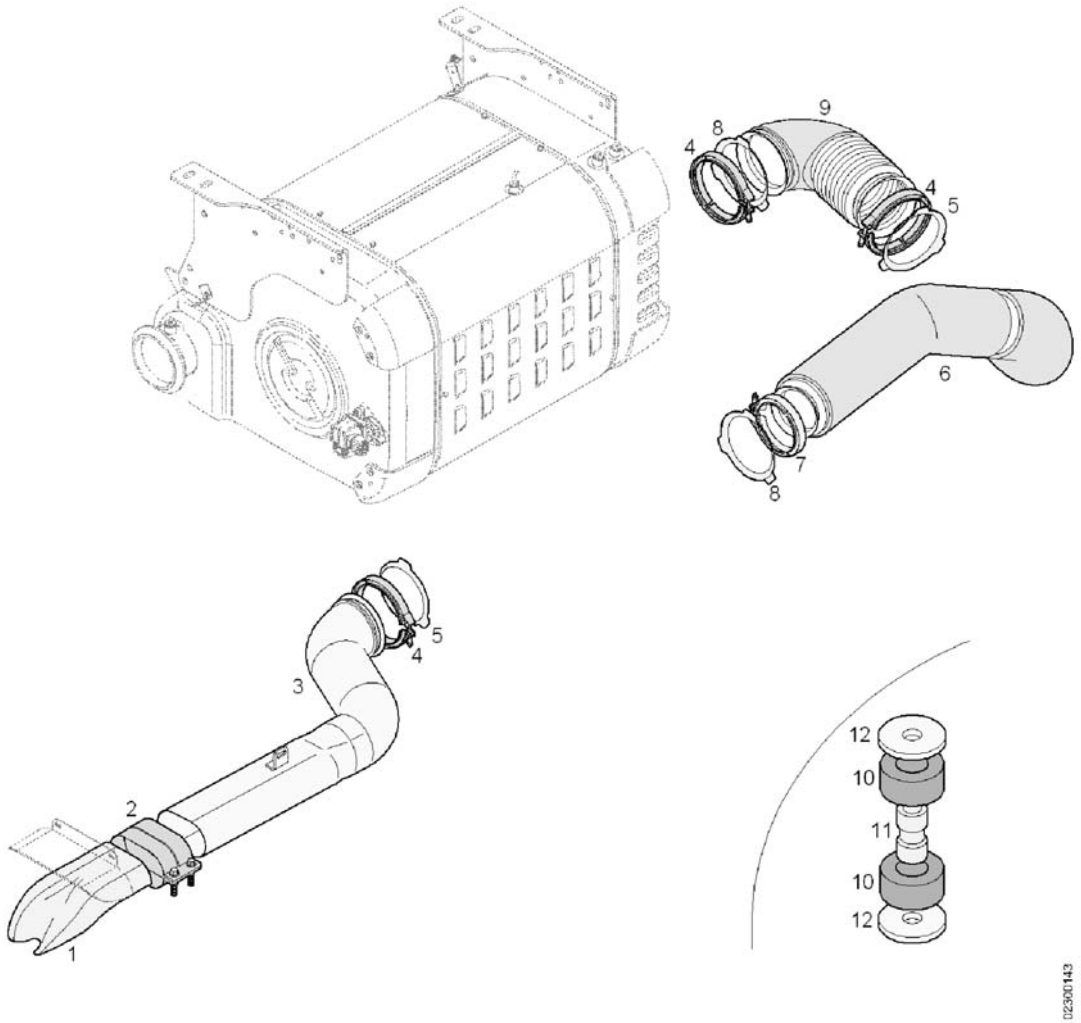

Pos.	Q.	Part n°	Description	Specification
1	1	11083799	Exhaust deflector	MAT:IN
2	1	10657119	Clamp	Ø127mm
3	1	11245571	Exhaust pipe	
4	3	11201199	Clamping ring	Ø158mm
5	3	11207957	Sealing ring	5" MAT: IN
6	1	11195960	Exhaust pipe	
7	1	11201198	Clamping ring	Ø130mm
8	1	11207956	Sealing ring	4" MAT: IN
9	1	11199352	Exhaust pipe	
10	10	10888987	Silentbloc	Ø42,5xØ21,2x20
11	4	11220382	Bush	Ø20xØ12,5 l.=39mm
12	8	11209554	Disc	Ø45xØ13x5

Exhaust aftertreatment device

CX 45
TX 45

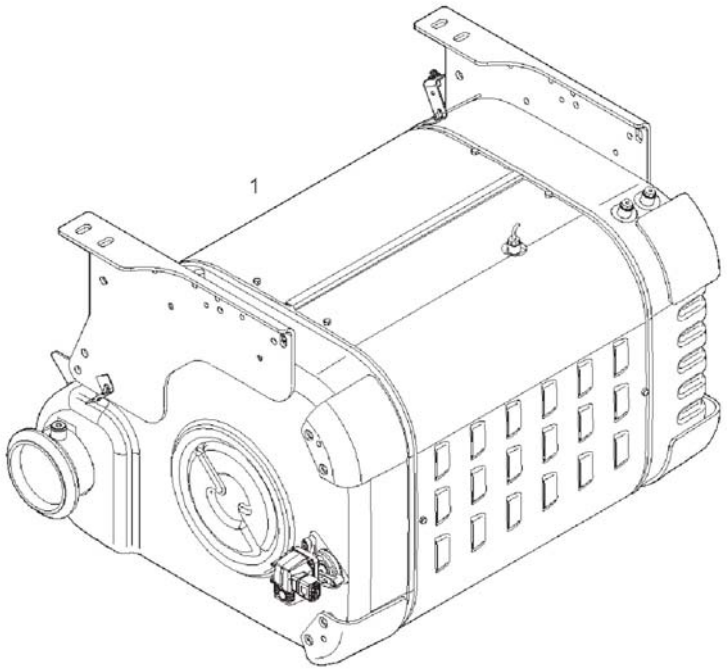

Pos.	Q.	Part n°	Description	Specification
1	1	11310755	Exhaust aftertreatment device	

AdBlue injection system

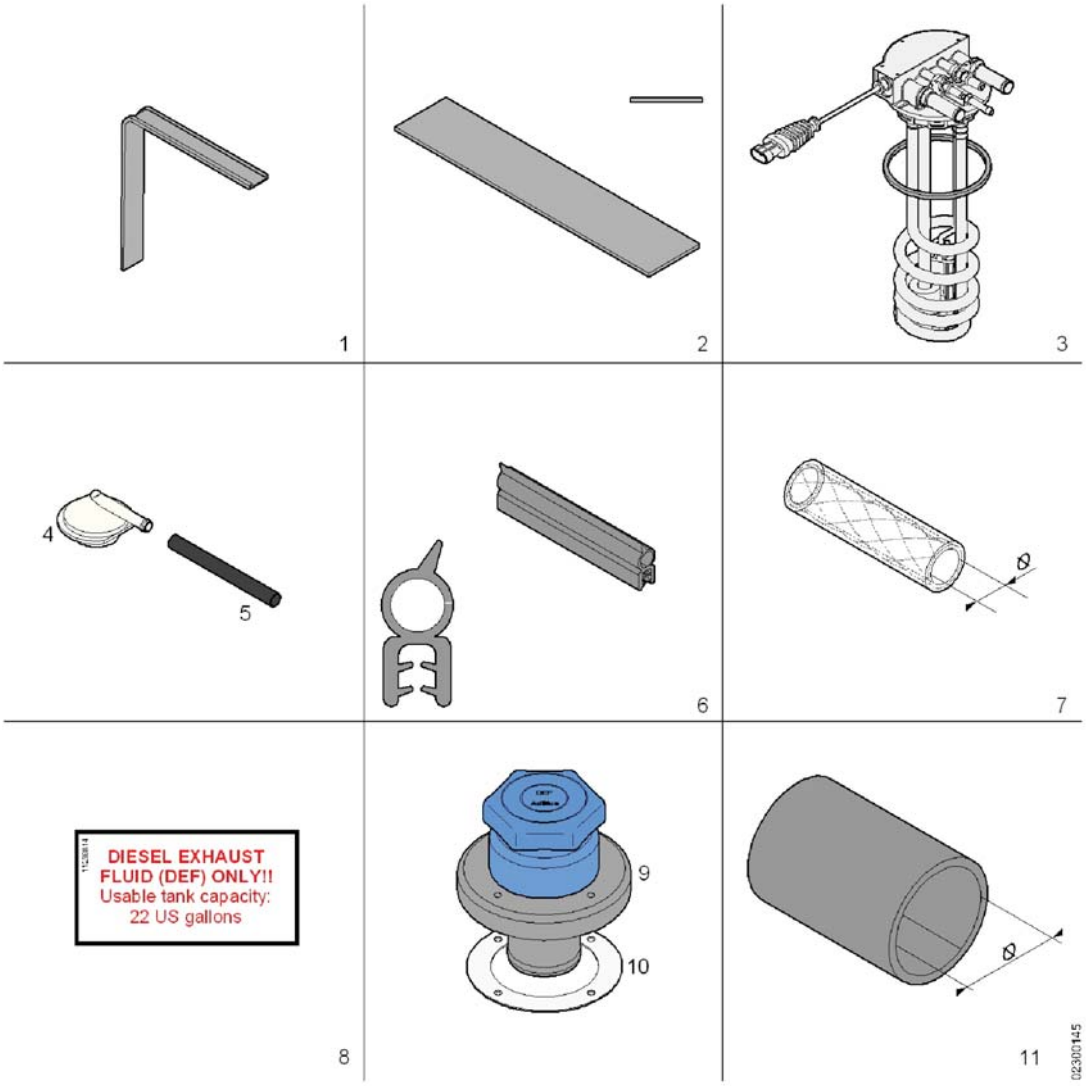

Pos.	Q.	Part n°	Description	Specification
1	#m	10603753	Rubber section	46x7
2	#m	621201940	Rubber section	60x4
3	1	11368031	Float	
	*1	11293505	O-ring	Ø109,34
4	1	11268328	Vent	
5	#m	11318578	Hose	Ø8x1 MAT:P (Z)
6	#m	11206842	Rubber section	
7	#m	660091404	Hose	Ø20x4 MAT:P
8	1	11236814	Decal	'DEF ONLY'
9	1	11208196	Filler opening	'DEF'
10	1	91080326	Ring	Ø130xØ90x1,5 MAT:IN
11	2	10998110	Hose	Ø60,3 - l.=100mm MAT:R

AdBlue injection system

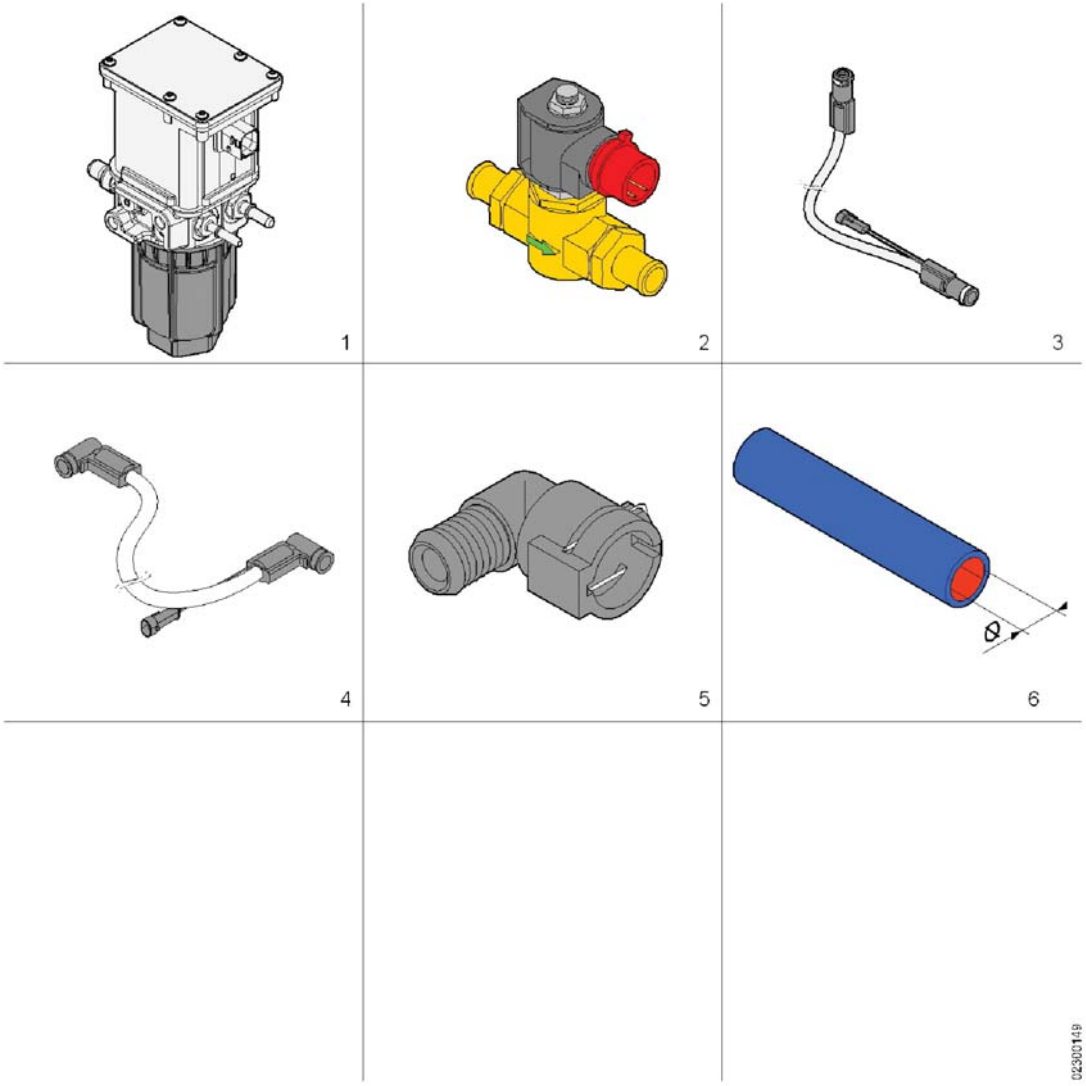

Pos.	Q.	Part n°	Description	Specification
1	1	11288732	Pump	
2	1	11204809	Solenoid valve	12V
3	1	11334251	AdBlue conduit, heated	l.=1400mm
	1	11334248	AdBlue conduit, heated	l.=3700mm
4	1	11334249	AdBlue conduit, heated	l.=2750mm
5	2	11342811	Quick coupling	Ø18xØ14
6	#m	11205815	Silicon hose	Ø16 l.=4m (B)

Filler cap

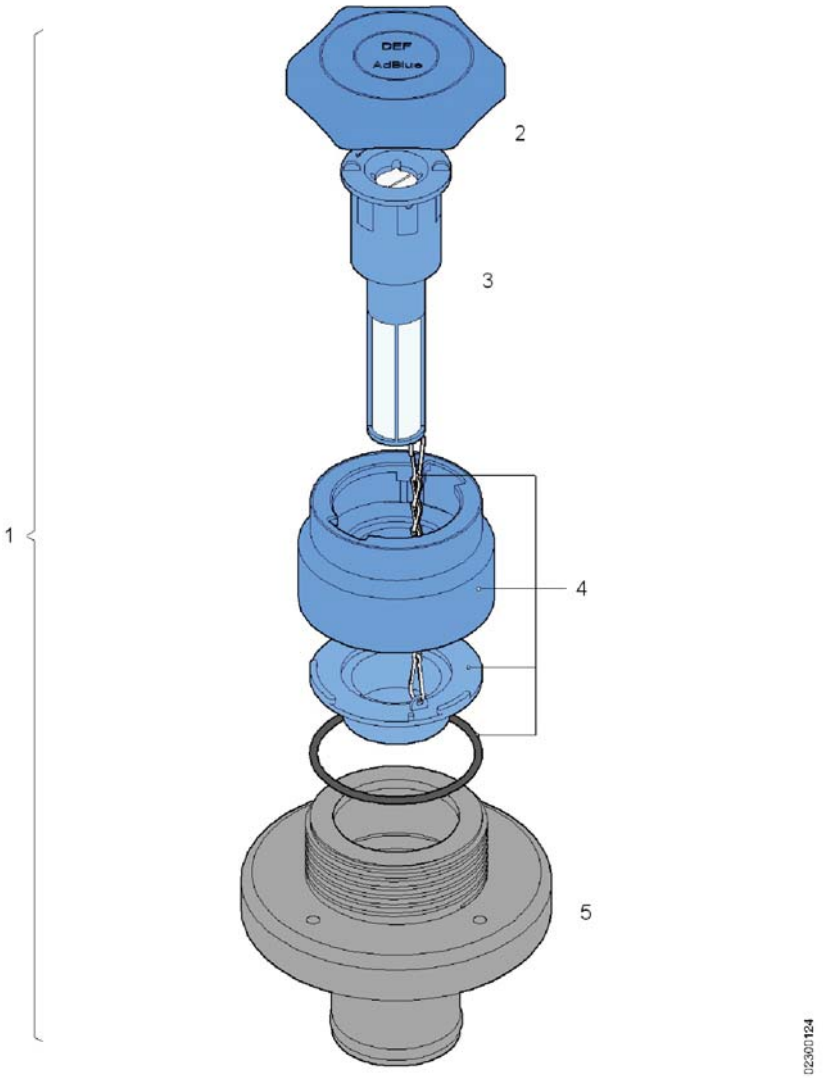

Pos.	Q.	Part n°	Description	Specification
1	1	11208196	Filler opening	'DEF'
2	*1	11301878	Filler cap	
3	*1	11313991	Flap	
4	*1	11313990	Filler opening	
5	*1	11217964	Filler pipe	

Radiator

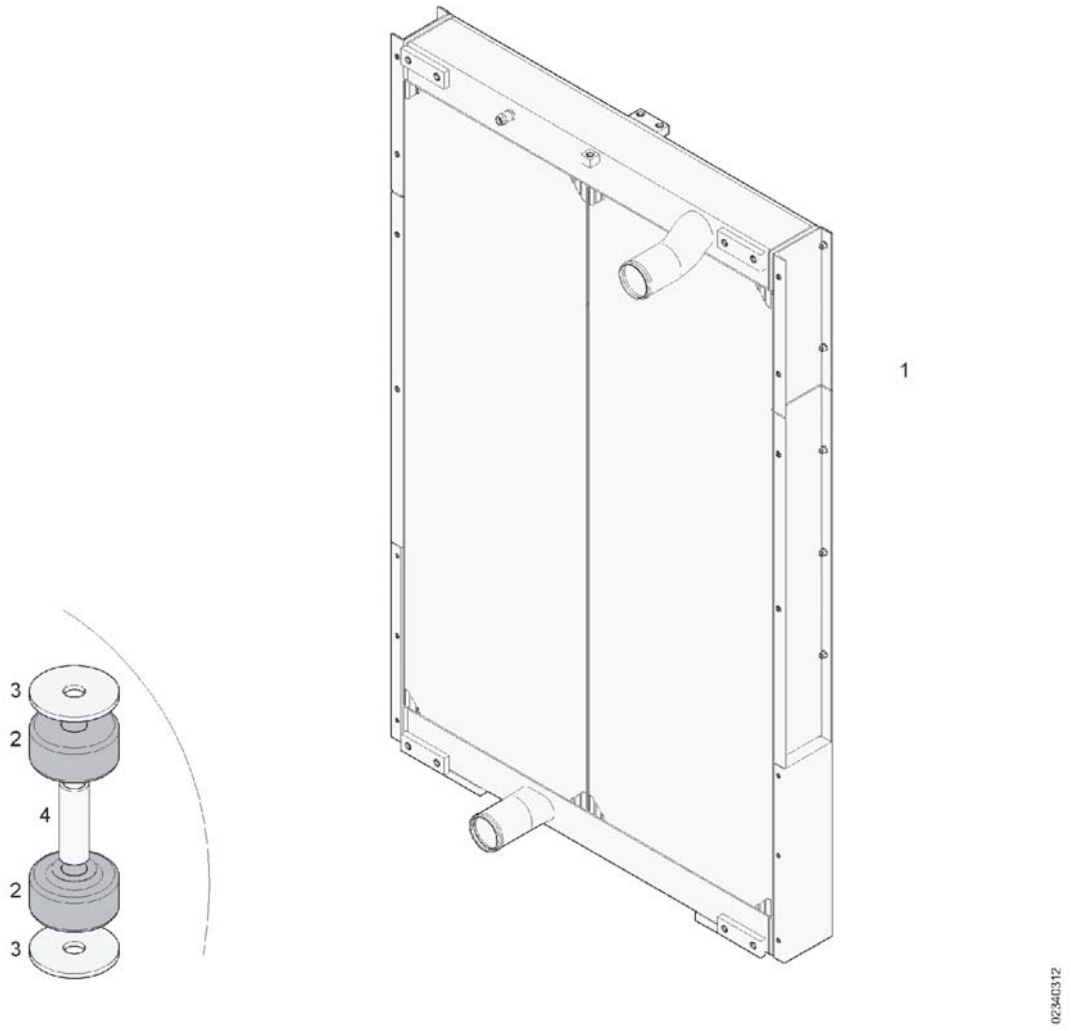

Pos.	Q.	Part n°	Description	Specification
1	1	11204229	Radiator	
2	4	621400080	Rubber	Ø60xØ17,5 d.=32,5mm
3	4	611400310	Disc	Ø60xØ14,5x4
4	2	10977057	Bush	Ø20xØ14,5 l.=60,5mm

Silicon hoses, straight

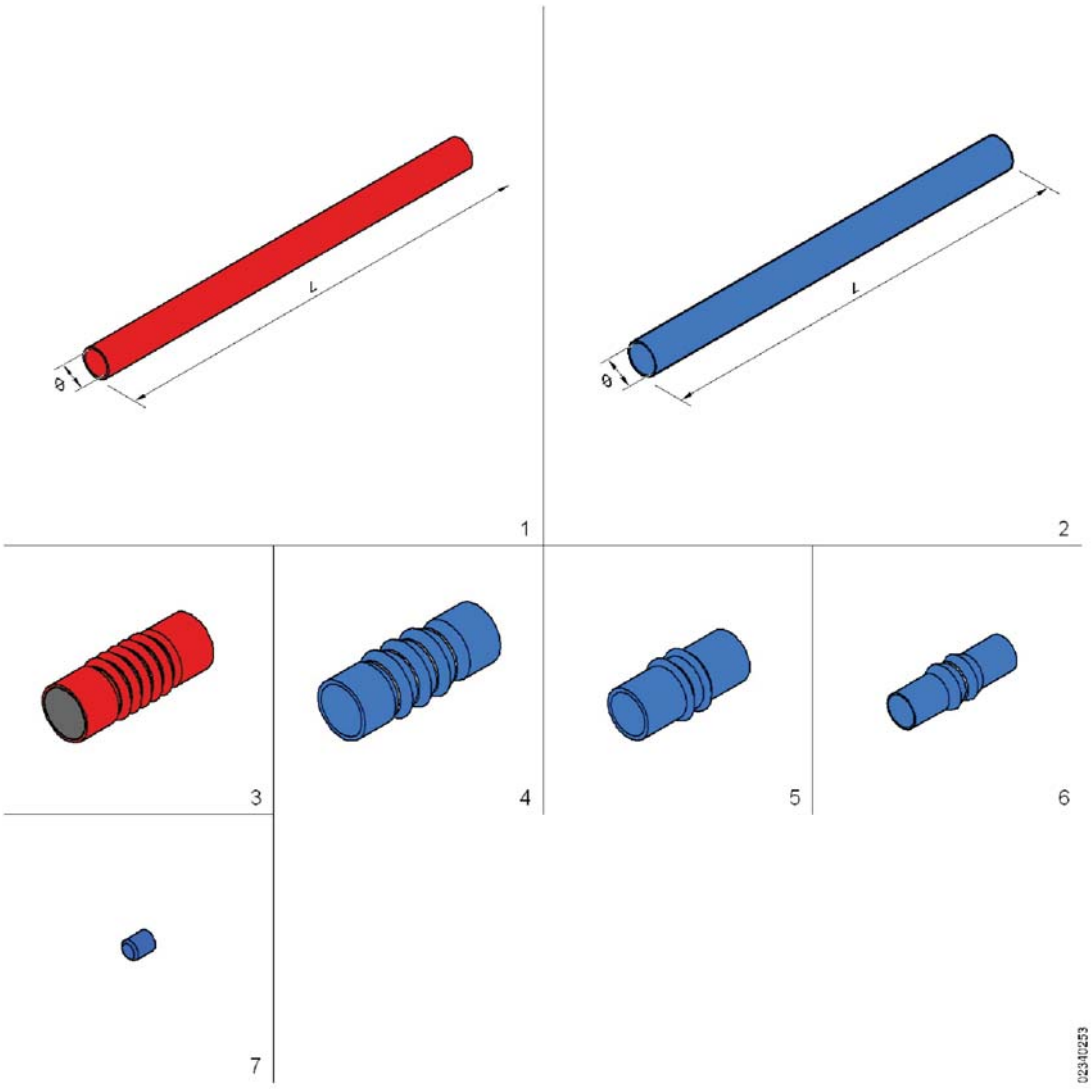

Pos.	Q.	Part n°	Description	Specification
1	#	11065414	Silicon hose	Ø34 l.=1m (R)
		10773713	Silicon hose	Ø50 l.=1m (R)
		10769142	Silicon hose	Ø60 l.=1m (R)
		10773711	Silicon hose	Ø76 l.=1m (R)
		-		
2	#	660070805	Silicon hose	Ø8 l.=1m (B)
		660071005	Silicon hose	Ø10 l.=1m (B)
		660071102	Silicon hose	Ø12 l.=1m (B)
		11218341	Silicon hose	Ø12,7 l.=4m (B)
		660071423	Silicon hose	Ø15 l.=1m (B)
		11205815	Silicon hose	Ø16 l.=4m (B)
		11019673	Silicon hose	Ø18 l.=1m (B)
		660071803	Silicon hose	Ø22 l.=1m (B)
		660072204	Silicon hose	Ø25 l.=1m (B)
		660072503	Silicon hose	Ø28 l.=1m (B)
		621402540	Silicon hose	Ø28 l.=2,7m (B)
		660073304	Silicon hose	Ø34 l.=1m (B)
		660073803	Silicon hose	Ø38 l.=1m (B)

Silicon hoses, straight

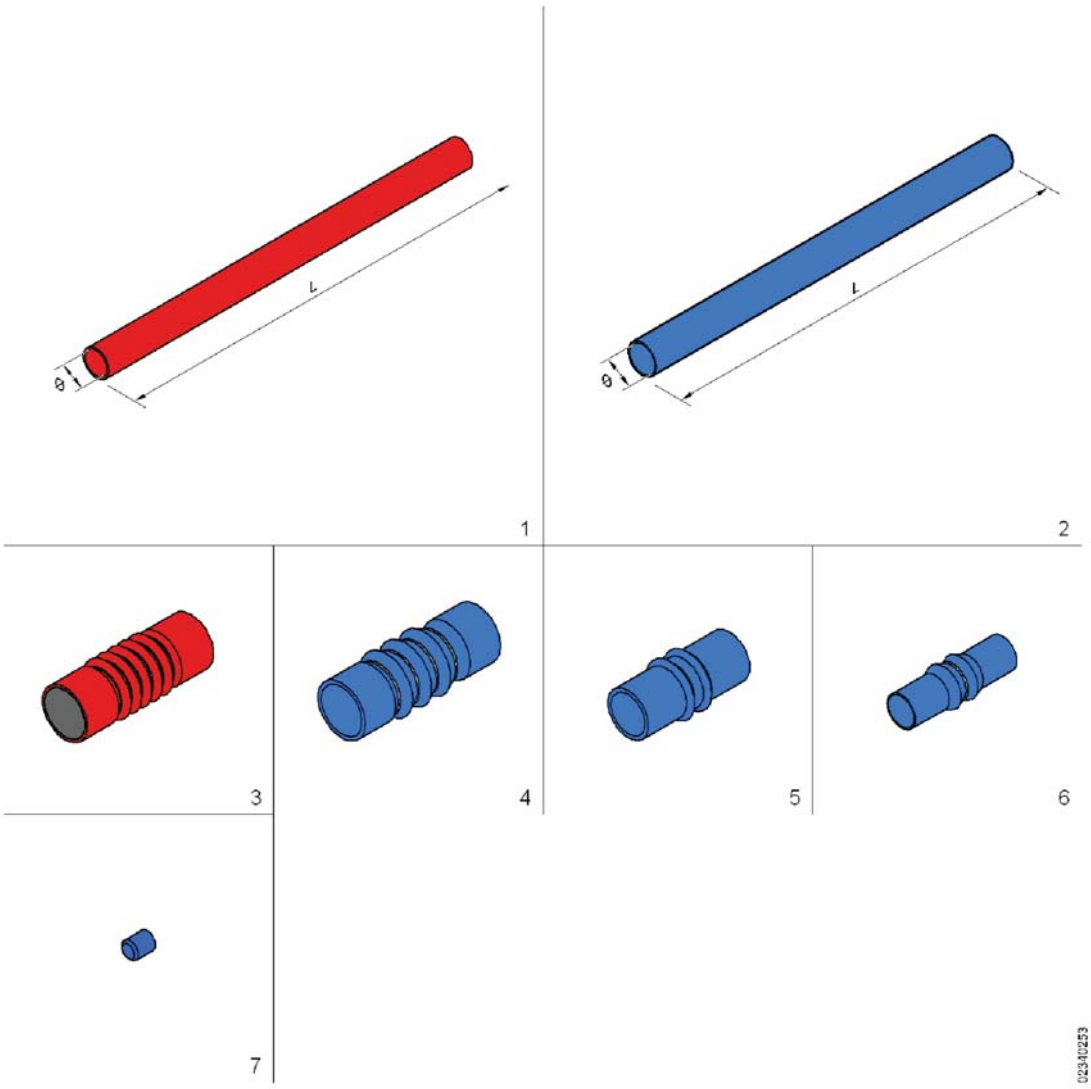

Pos.	Q.	Part n°	Description	Specification
		660074507	Silicon hose	Ø42 l.=1m (B)
		660074813	Silicon hose	Ø50 l.=1m (B)
		11203896	Silicon hose	Ø50 l.=4m (B)
		11060941	Silicon hose	Ø60 l.=1m (B)
		11060937	Silicon hose	Ø70 l.=1m (B)
		-		
3	#	11119220	Silicon hose	Ø76 l.=240mm (R)
		-		
4	#	621402200	Silicon hose	Ø60 l.=200mm (B)
		-		
5	#	631401920	Silicon hose	Ø50 l.=150mm (B)
		-		
6	#	10520273	Silicon hose	Ø34 l.=150mm (B)
		11079105	Silicon hose	Ø60 l.=300mm (B)
		-		
7	#	10587709	Plug	Ø8 MAT:SI (B)
		10609221	Plug	Ø10 MAT:SI (B)
		625100640	Plug	Ø15 MAT:SI (B)

Silicon hoses, straight

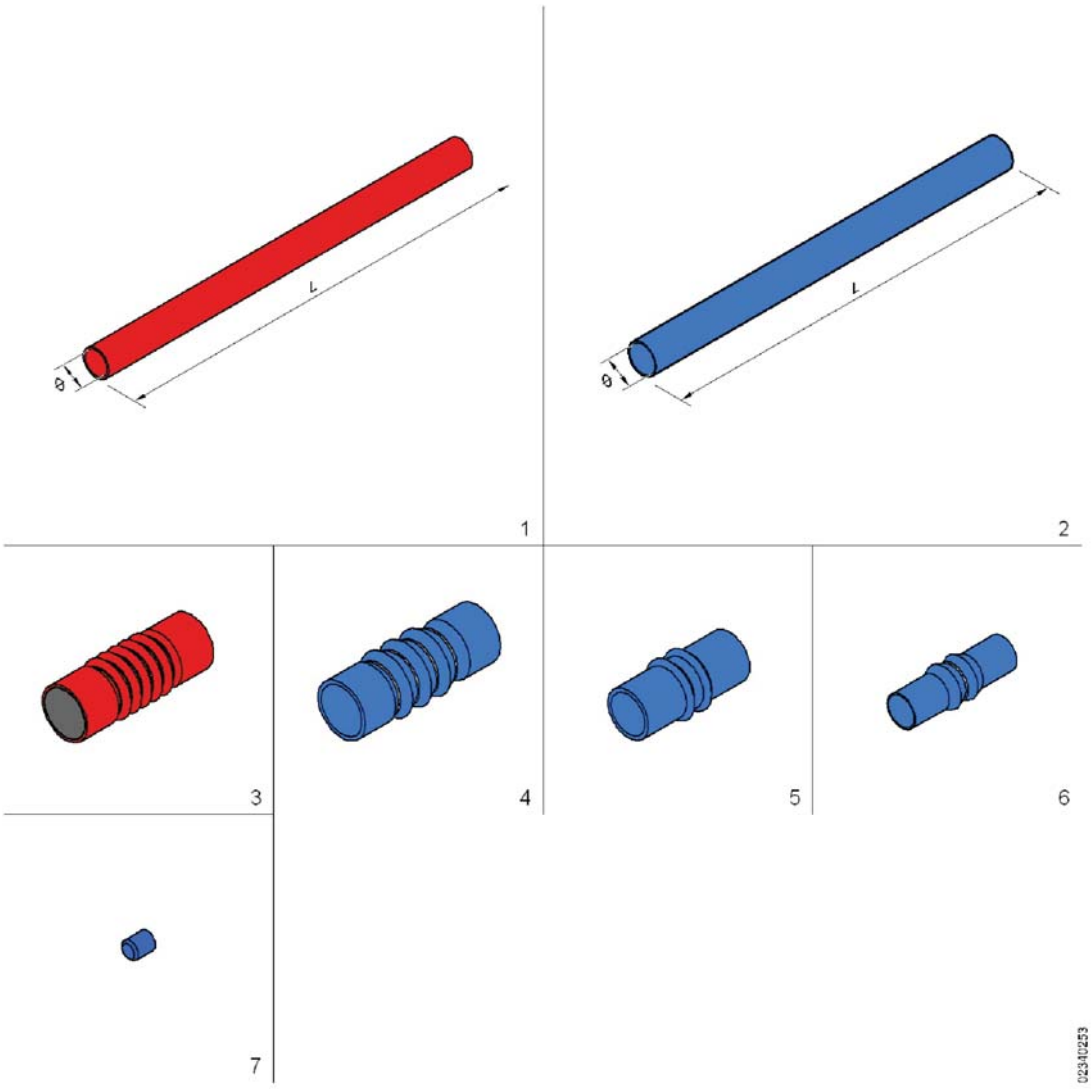

Pos.	Q.	Part n°	Description	Specification
		625100700	Plug	Ø22 MAT:SI (B)
		625100690	Plug	Ø28 MAT:SI (B)
		625100860	Plug	Ø34 MAT:SI (B)
		625100870	Plug	Ø38 MATSI (B)

Silicon hoses, adapter

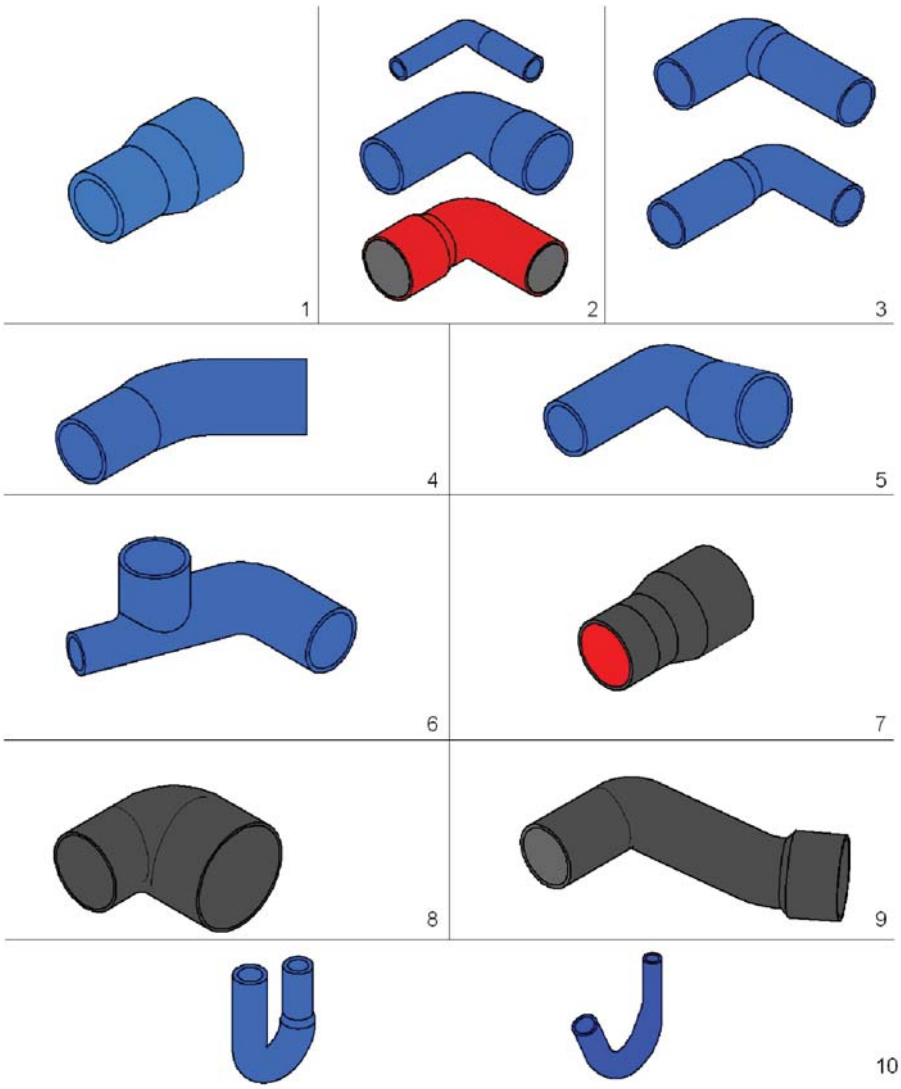

Pos.	Q.	Part n°	Description	Specification
1	#	625100470	Silicon hose	Ø8xØ15 l.=180mm (B)
		10524087	Silicon hose	Ø10xØ15 l.=100mm (B)
		625100930	Silicon hose	Ø15xØ22 l.=100mm (B)
		11019686	Silicon hose	Ø18-Ø22 l.=100mm (B)
		625100730	Silicon hose	Ø18-Ø28 l.=100mm (B)
		625100540	Silicon hose	Ø20xØ22 l.=100mm (B)
		625100620	Silicon hose	Ø22xØ28 l.=100mm (B)
		625100480	Silicon hose	Ø28xØ32 l.=110mm (B)
		625100490	Silicon hose	Ø28xØ35 l.=110mm (B)
		625100880	Silicon hose	Ø28xØ38 l.=100mm (B)
		621402500	Silicon hose	Ø34xØ38 l.=100mm (B)
		621403140	Silicon hose	Ø38xØ50 l.=100mm (B)
		631401890	Silicon hose	Ø45xØ50 l.=75mm (B)
		621402310	Silicon hose	Ø50xØ60 l.=100mm (B)
		621401500	Silicon hose	Ø50xØ60 l.=250mm (B)
		621401980	Silicon hose	Ø55xØ60 l.=100mm (B)
		621401890	Silicon hose	Ø60xØ65 l.=100mm (B)
		-		

Silicon hoses, adapter

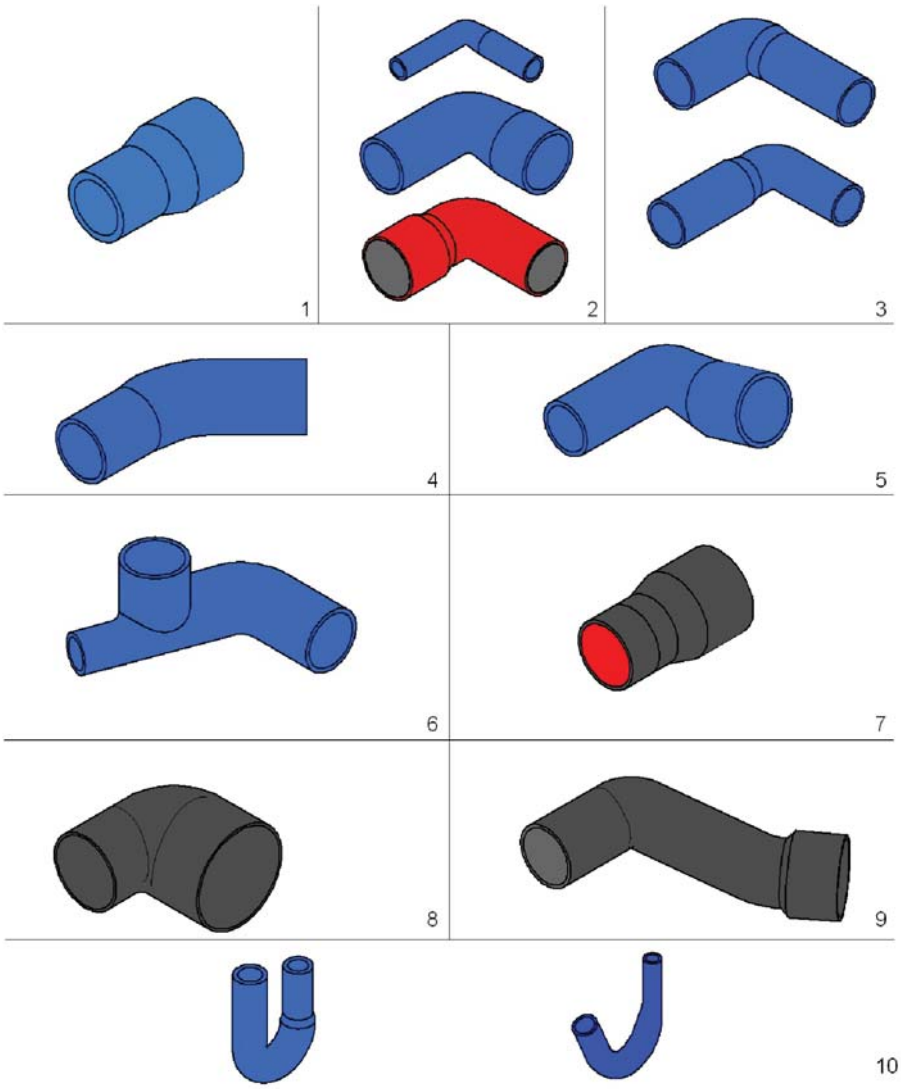

Pos.	Q.	Part n°	Description	Specification
2	#	11161833	Silicon hose	Ø6xØ10 - 90° (B)
		621403560	Silicon hose	Ø6xØ15 - 90° (B)
		10648831	Silicon hose	Ø8xØ15 - 90° (B)
		11206252	Silicon hose	Ø10xØ15 - 90° (B)
		625100940	Silicon hose	Ø15xØ22 - 90° (B)
		625100740	Silicon hose	Ø18xØ28 - 90° (B)
		10569619	Silicon hose	Ø20xØ22 - 90° (B)
		625100800	Silicon hose	Ø22xØ28 - 90° (B)
		621402820	Silicon hose	Ø28xØ32 - 90° (B)
		10514544	Silicon hose	Ø28xØ34 - 90° (B)
		621402780	Silicon hose	Ø34xØ38 - 90° (B)
		621402740	Silicon hose	Ø45xØ50 - 90° (B)
		10553118	Silicon hose	Ø50xØ55 - 90° (B)
		10997803	Silicon hose	Ø50xØ60 - 90° (B)
		621402120	Silicon hose	Ø50xØ60 - 90° (B)
		621403700	Silicon hose	Ø50xØ60 - 90° (B)
		10880819	Silicon hose	Ø65xØ70 - 90° (R)
		10618452	Silicon hose	Ø76xØ90 - 90° (R)

Silicon hoses, adapter

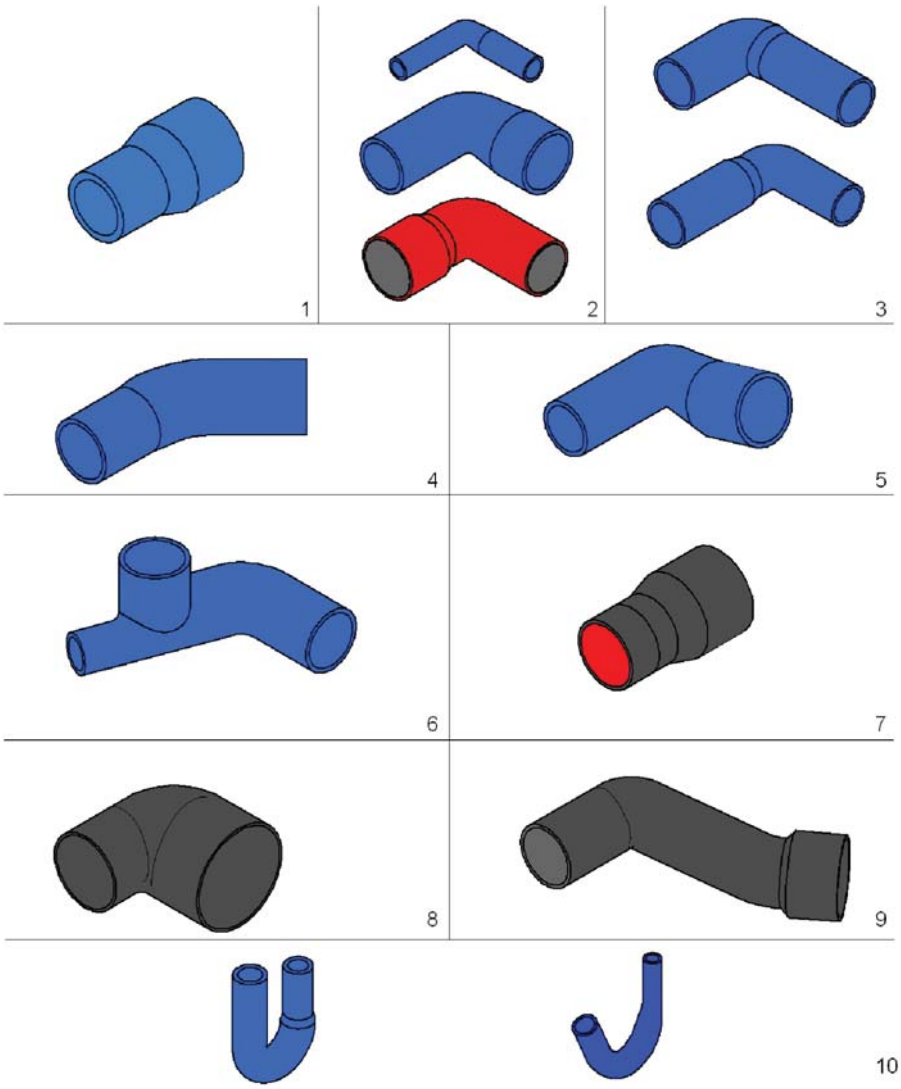

Pos.	Q.	Part n°	Description	Specification
		-		
3	#	11019681	Silicon hose	Ø18xØ22 - 90° (B)
		625101020	Silicon hose	Ø28xØ38 - 90° (B)
		10671572	Silicon hose	Ø34xØ38 - 90° (B)
		621402800	Silicon hose	Ø50xØ60 - 90° (B)
		10649088	Silicon hose	Ø60xØ65 - 90° (B)
		-		
4	#	10625315	Silicon hose	Ø34xØ50 - 125° (B)
		11193342	Silicon hose	Ø50xØ55 - 135° (B)
		10679028	Silicon hose	Ø55xØ60 - 135° (B)
		10649089	Silicon hose	Ø60-Ø65 - 135° (B)
		621402770	Silicon hose	Ø60xØ70 - 135° (B)
		-		
5	#	10598075	Silicon hose	Ø50xØ65 - 90° (B)
		-		
6	#	10998501	Silicon hose	Ø60xØ60xØ34 - 90° (B)
		-		
7	#	11014151	Silicon hose	Ø110xØ130 l.=140mm (Z)

Silicon hoses, adapter

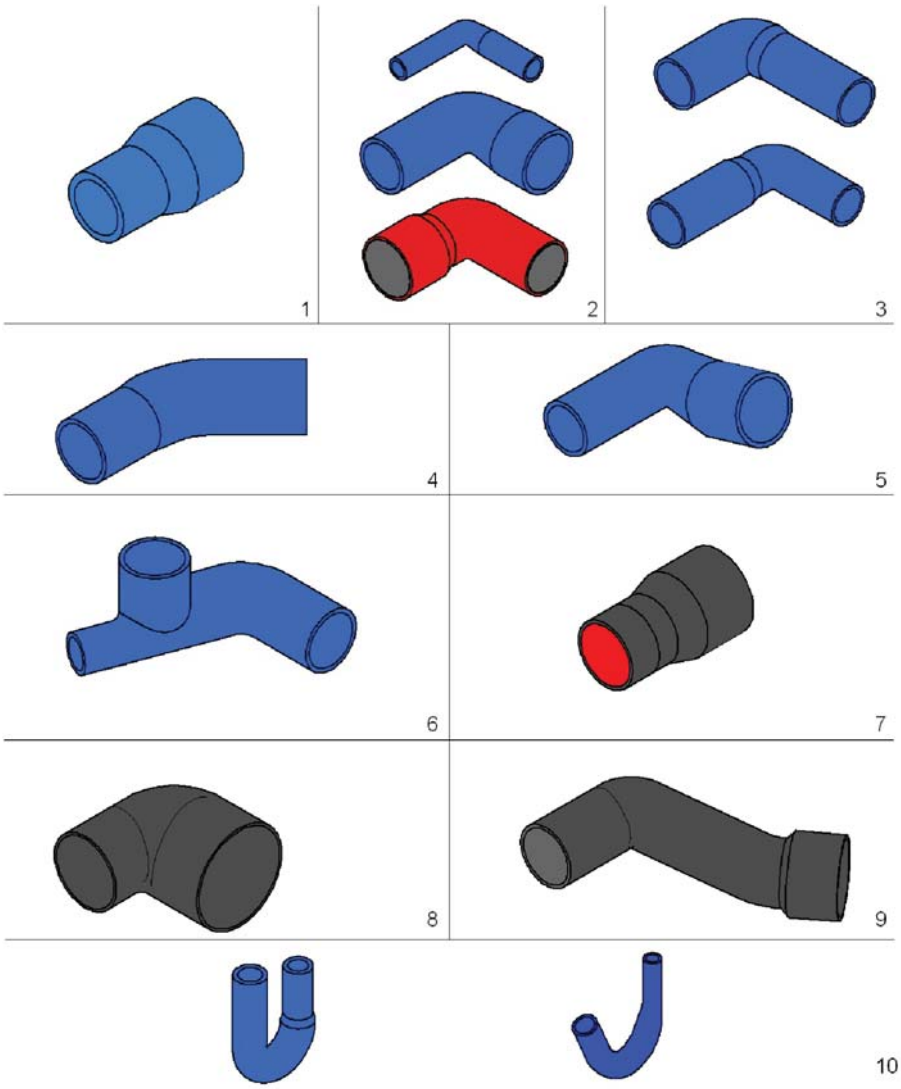

Pos.	Q.	Part n°	Description	Specification
		-		
8	#	10935878	Silicon hose	Ø127xØ178 - 90° (Z)
		-		
9	#	11020183	Silicon hose	Ø80xØ101 - 90° (Z)
		-		
10	#	11151839	Silicon hose	Ø18xØ22 - 180° (B)
		11190643	Silicon hose	Ø28xØ18 - 155° (B)

Silicon hoses, elbow

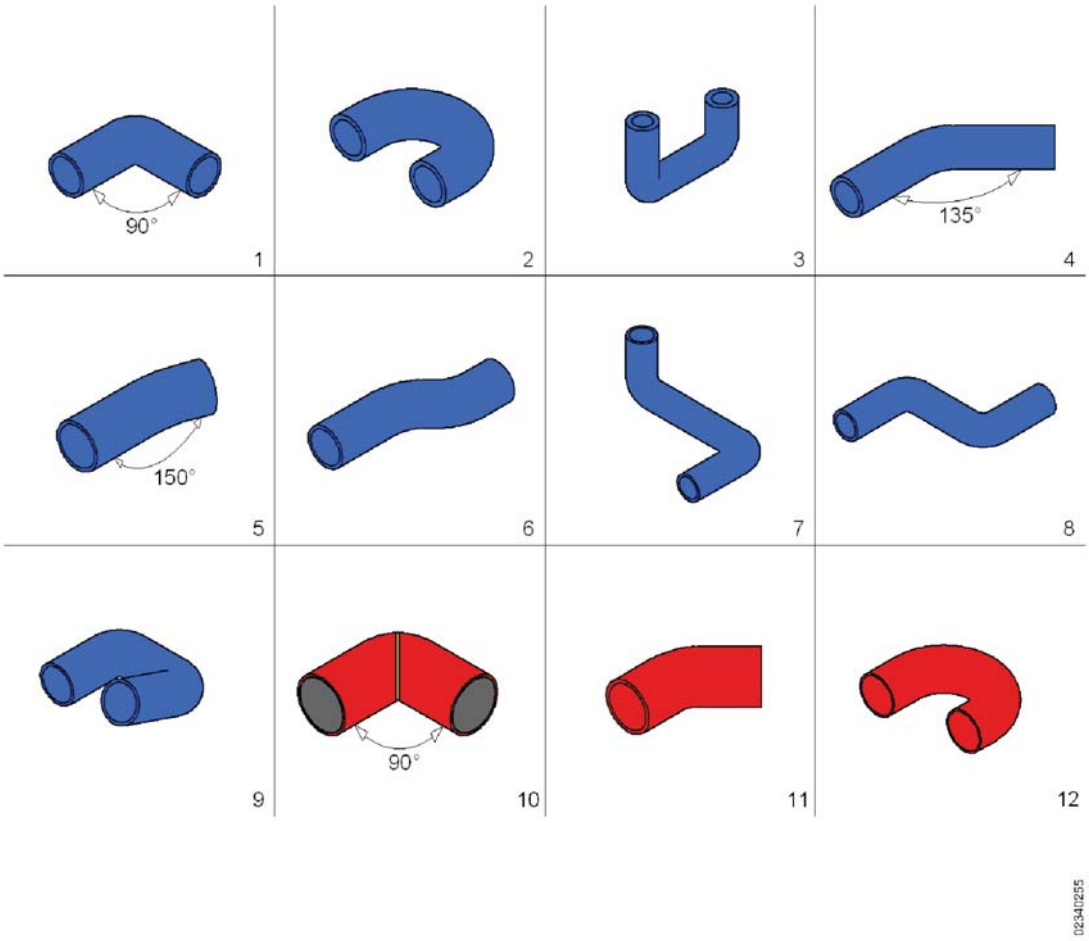

Pos.	Q.	Part n°	Description	Specification
1	#	10670834	Silicon hose	Ø10 l.=80x80mm - (B)
		11207960	Silicon hose	Ø10 l.= 55x105mm - (B)
		10935402	Silicon hose	Ø12 90° l.= 50x75mm - (B)
		11020179	Silicon hose	Ø15 l.=40x40mm - (B)
		621401370	Silicon hose	Ø15 l.= 80x73mm - (B)
		660528205	Silicon hose	Ø15 l.=150x150mm - (B)
		625100750	Silicon hose	Ø22 l.=75x75mm - (B)
		631402090	Silicon hose	Ø22 l.=120x120mm - (B)
		631401990	Silicon hose	Ø22 l.=150x150mm - (B)
		660528206	Silicon hose	Ø22 l.=150x150mm - (B)
		621401460	Silicon hose	Ø28 l.=150x150mm - (B)
		625100580	Silicon hose	Ø32 l.=150x150mm - (B)
		621401360	Silicon hose	Ø34 l.=115x115mm - (B)
		11134014	Silicon hose	Ø35 l.=170x140mm - (B)
		621401350	Silicon hose	Ø38 l.=100x140mm - (B)
		10695006	Silicon hose	Ø38 l.=170x140mm - (B)
		11190625	Silicon hose	Ø50 l.=75x120mm - (B)
		10553112	Silicon hose	Ø50 l.=120x120mm - (B)

Silicon hoses, elbow

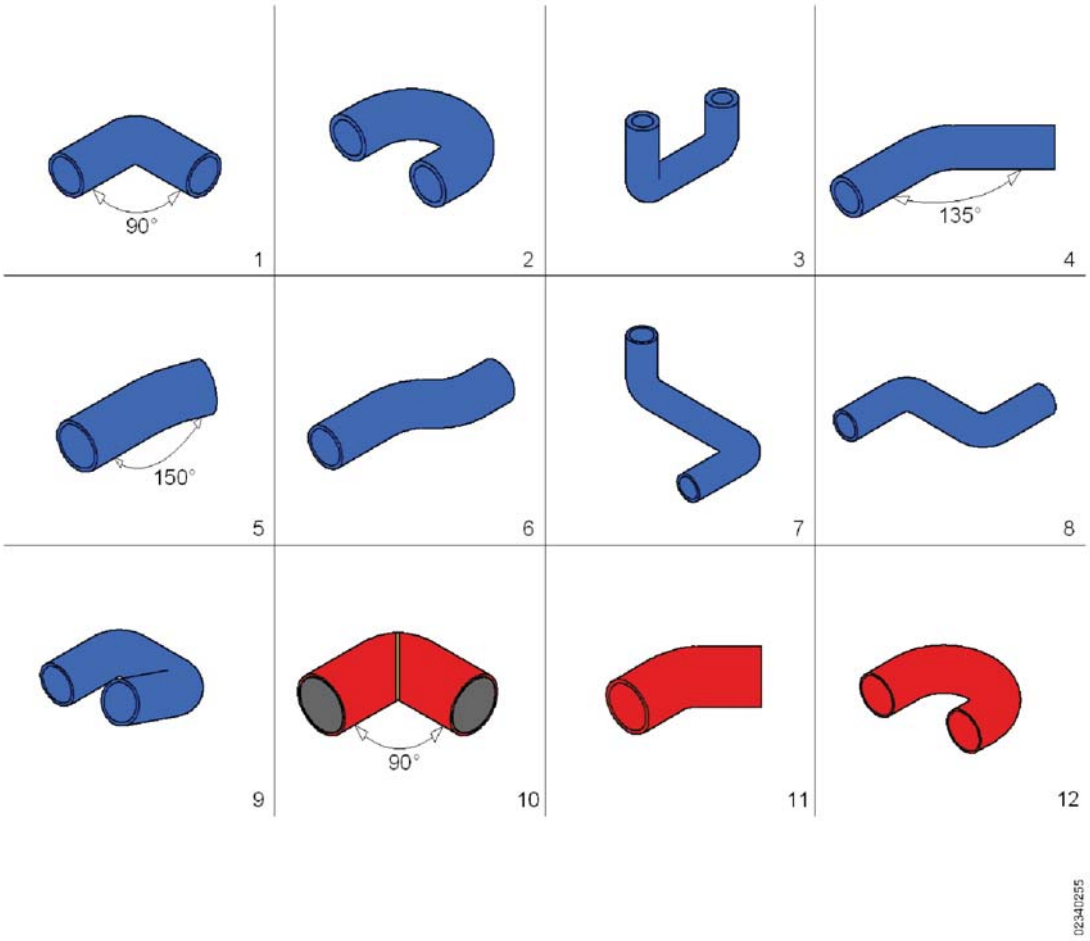

Pos.	Q.	Part n°	Description	Specification
		621401390	Silicon hose	Ø50 l.=180x250mm - (B)
		10699495	Silicon hose	Ø60 l.=170x200mm - (B)
		N963050134	Silicon hose	Ø60 l.=85x85mm - (B)
		621401340	Silicon hose	Ø60 l.=140x200mm - (B)
		-		
2	#	10679562	Silicon hose	Ø22 h.=111x111mm - (B)
		10543473	Silicon hose	Ø35 h.=30x30mm - (B)
		-		
3	#	11020174	Silicon hose	Ø15 h.=60x40mm - (B)
		11222163	Silicon hose	Ø22 h.=30.5x30.5mm - (B)
		-		
4	#	10831211	Silicon hose	Ø22 l.=100x120mm - (B)
		621402510	Silicon hose	Ø28 l.=100x120mm - (B)
		10616187	Silicon hose	Ø34 l.=120x120mm - (B)
		631403660	Silicon hose	Ø50 l.=115x125mm - (B)
		10706329	Silicon hose	Ø60 l.=85x95mm - (B)
		621402760	Silicon hose	Ø60 l.=65x75mm - (B)
		-		

Silicon hoses, elbow

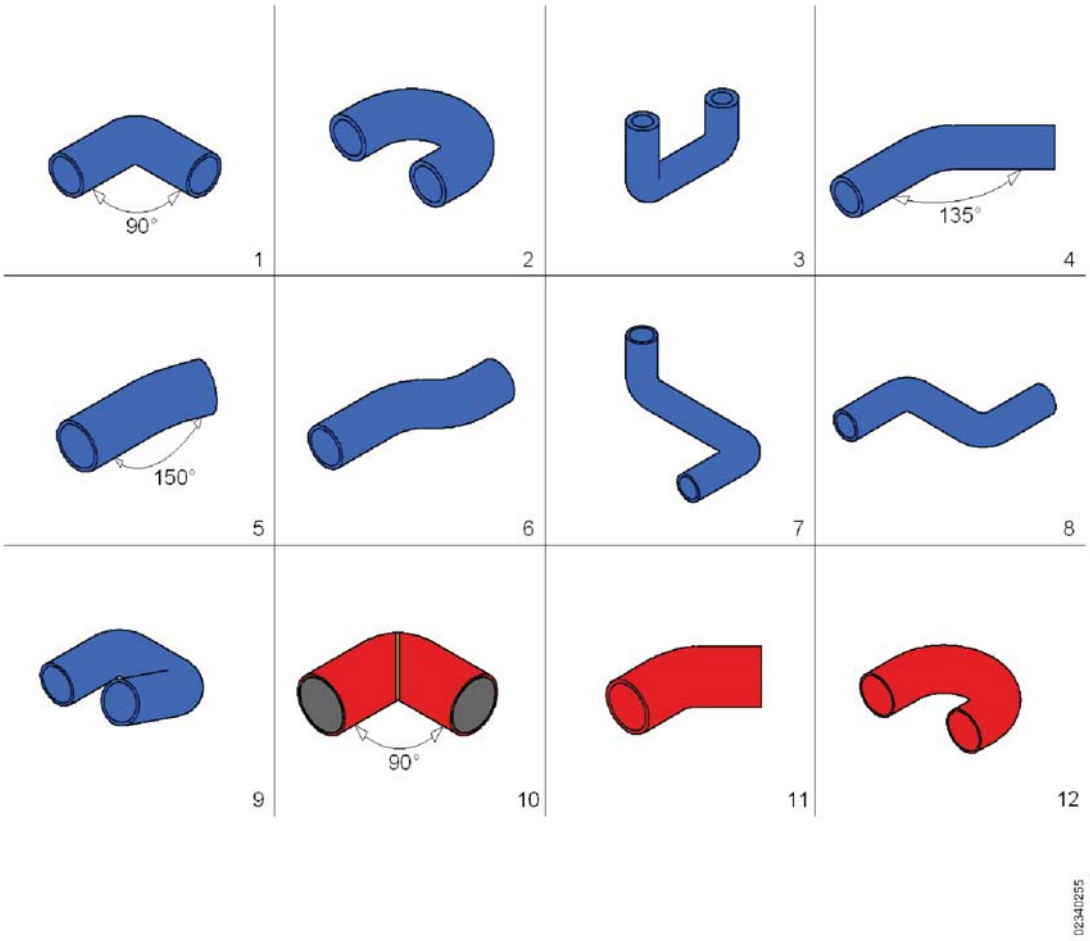

Pos.	Q.	Part n°	Description	Specification
5	#	621402840	Silicon hose	Ø60 l.=70x145mm - (B)
		-		
6	#	625100650	Silicon hose	Ø22 l.=120mm (B)
		10662060	Silicon hose	Ø22 l.=240mm (B)
		625101090	Silicon hose	Ø28 l.=150mm (B)
		621204390	Silicon hose	Ø34 l.=130mm (B)
		621402020	Silicon hose	Ø38 l.=210mm (B)
		621403370	Silicon hose	Ø50 l.=250mm (B)
		-		
7	#	10969813	Silicon hose	Ø10 l.=135mm - h.=50mm (B)
		621401380	Silicon hose	Ø38 l.=135mm - h.=100mm (B)
		-		
8	#	625100610	Silicon hose	Ø38 l.=240mm (B)
		-		
9	#	10748848	Silicon hose	Ø60 h.=130x130mm - (B)
		-		
10	#	11181056	Silicon hose	Ø28 l.=150x150mm - (R)
		10522499	Silicon hose	Ø34 l.=115x115mm - (R)

Silicon hoses, elbow

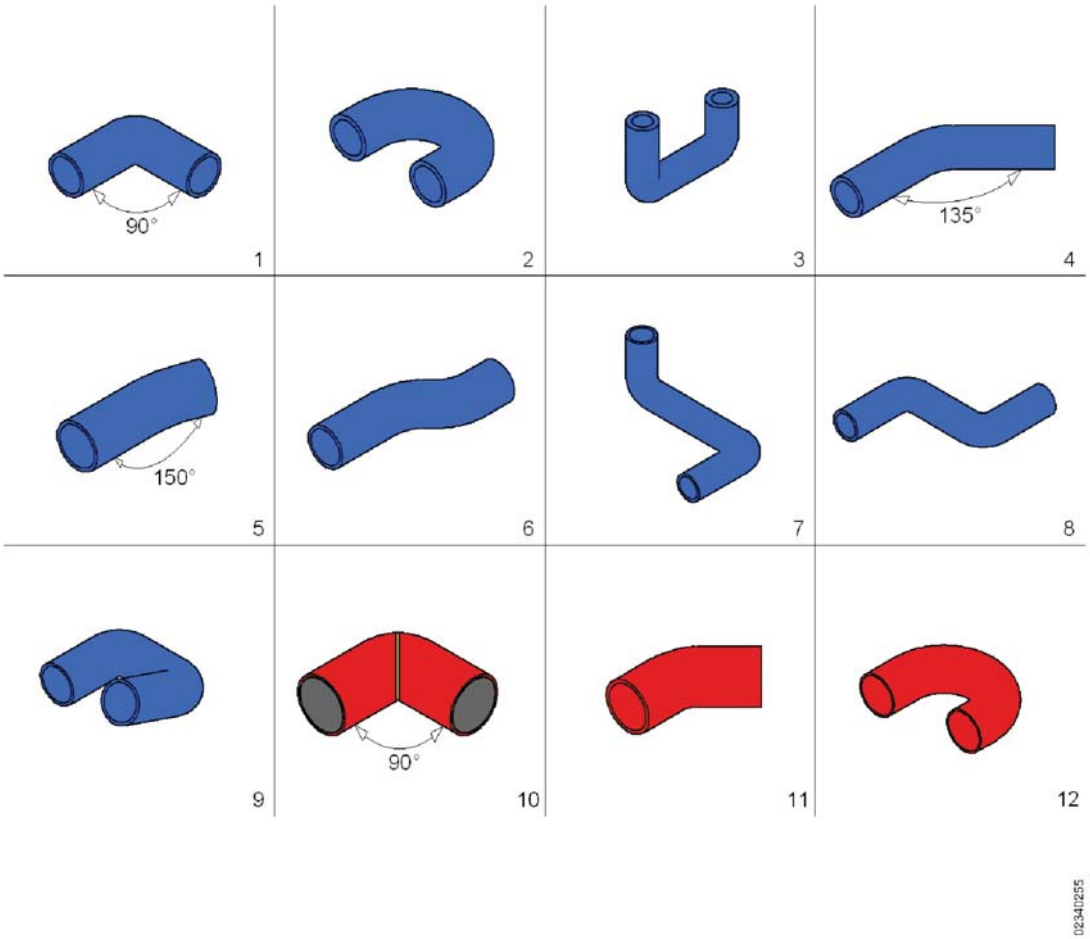

Pos.	Q.	Part n°	Description	Specification
		10561601	Silicon hose	Ø50 l.=120x120mm - (R)
		10900956	Silicon hose	Ø60 l.=170x200mm - (R)
		10773714	Silicon hose	Ø90 l.=160x160mm - (R)
		10773738	Silicon hose	Ø100 l.=150x150mm - (R)
		10773741	Silicon hose	Ø100 l.=240x250mm - (R)
		-		
11	#	10769127	Silicon hose	Ø60 l.=85x95mm - (R)
		-		
12	#	10879432	Silicon hose	Ø100 h.=55x95mm - (R)

Silicon hoses

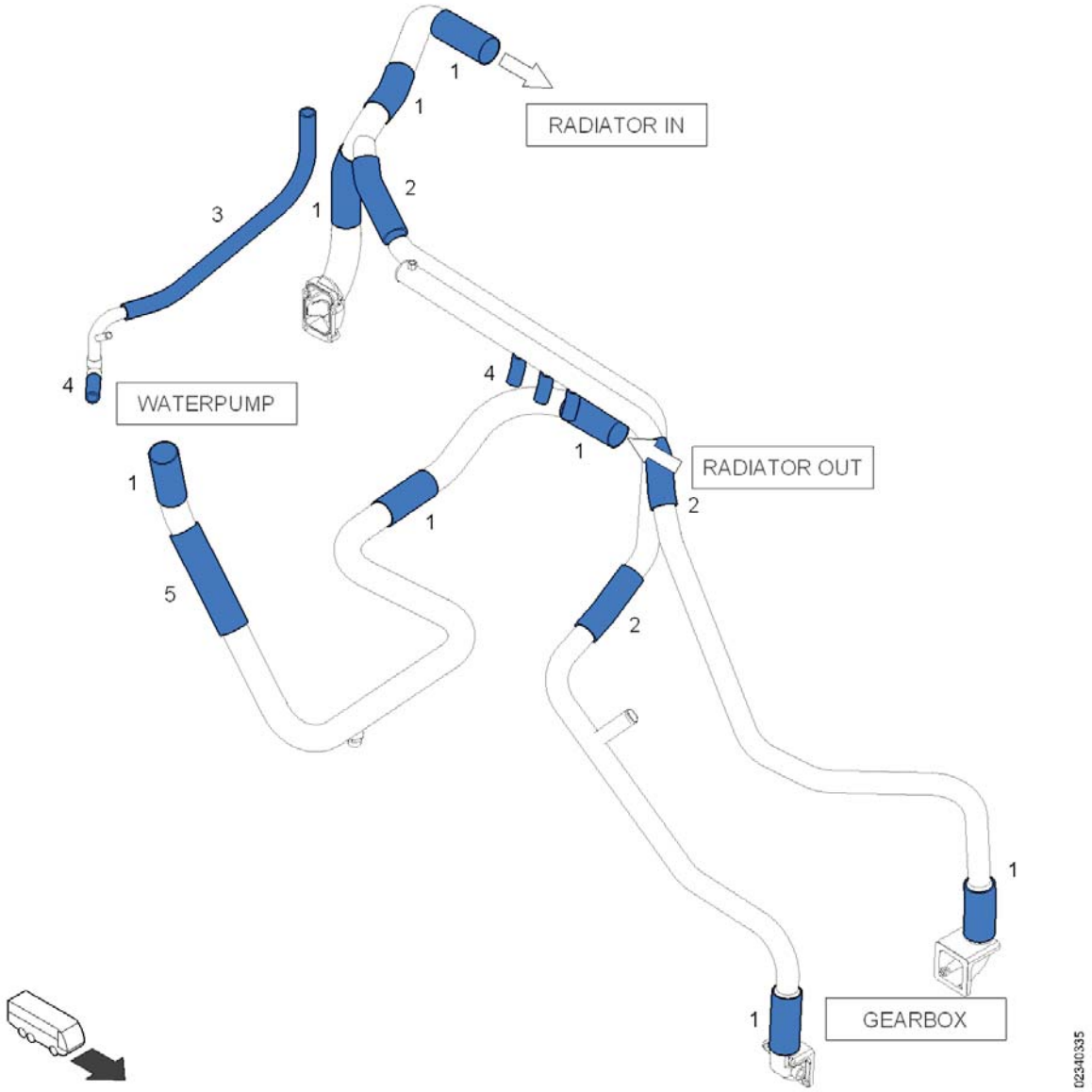

Pos.	Q.	Ref.N°	Description	Spec.
1	8	11145297	Silicon hose	Ø60 l.=150mm (B)
2	#m	11203896	Silicon hose	Ø50 l.=4m (B)
3	#m	660072503	Silicon hose	Ø28 l.=1m (B)
4	#m	660071803	Silicon hose	Ø22 l.=1m (B)
5	#m	11060941	Silicon hose	Ø60 l.=1m (B)

Brackets

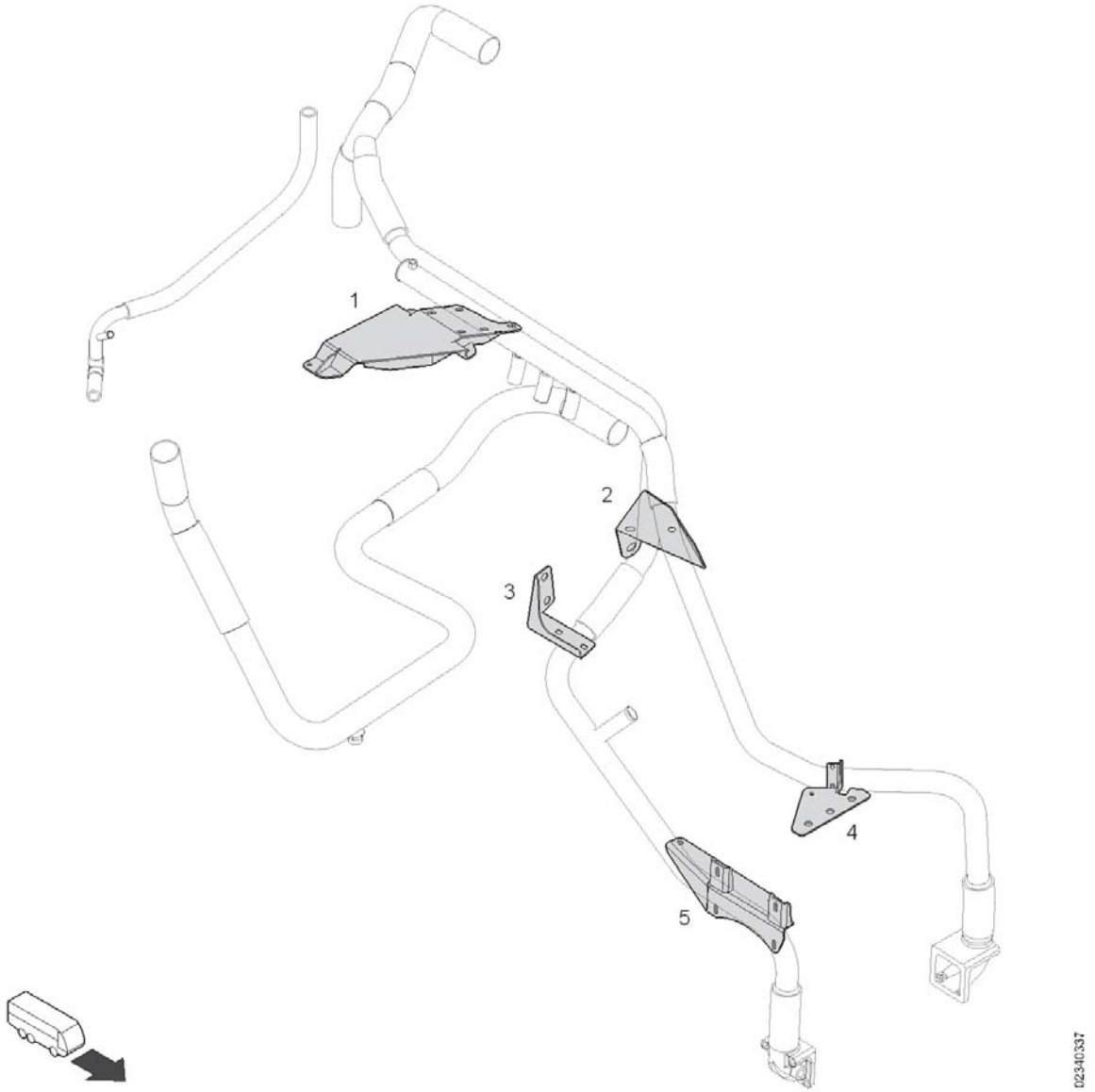

Pos.	Q.	Ref.N°	Description	Spec.
1	1	11368361	Bracket	
2	1	11208841	Bracket	
3	1	11302844	Bracket	
4	1	11209151	Bracket	
5	1	11080459	Bracket	

Piping

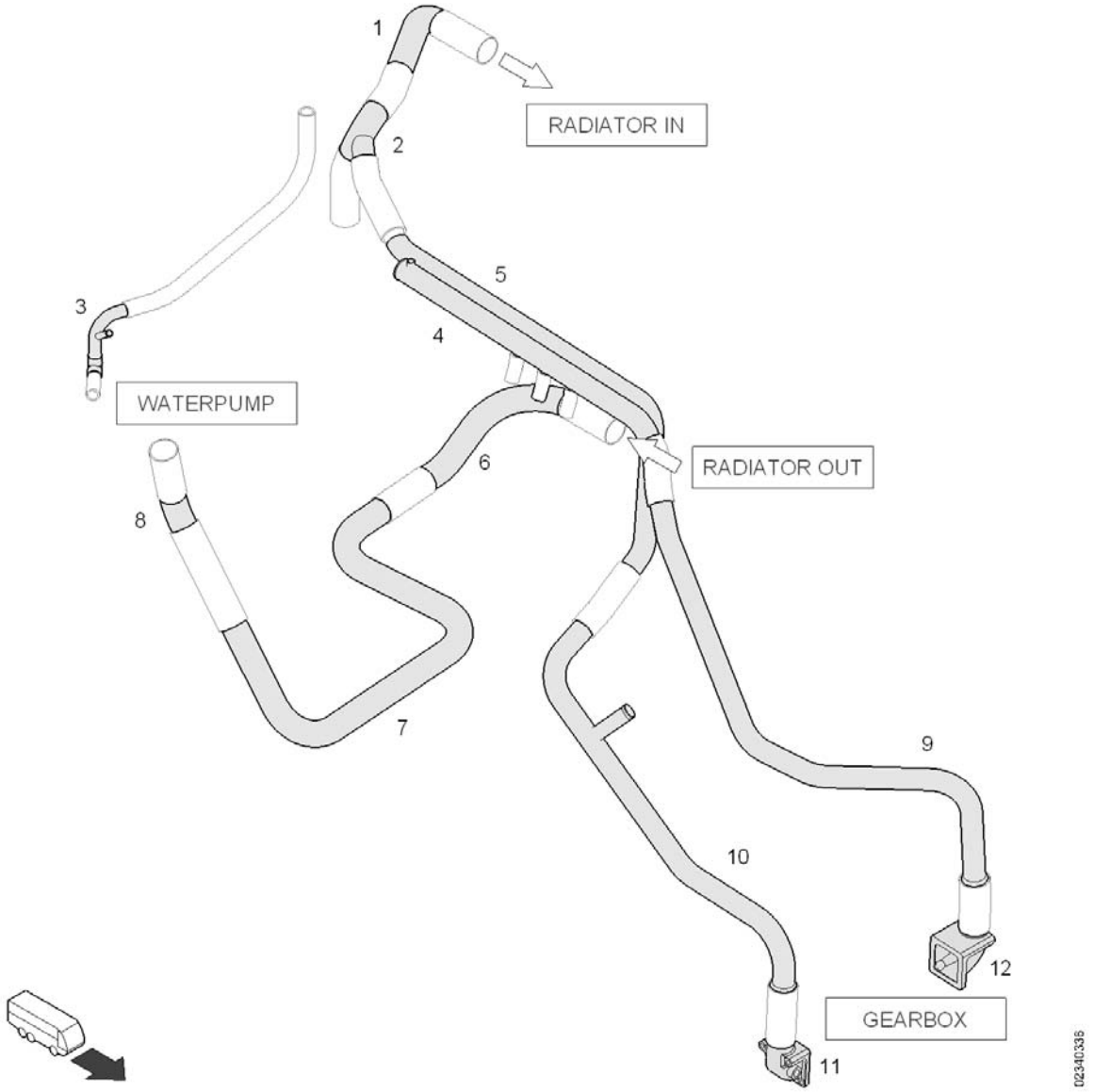

Pos.	Q.	Ref.N°	Description	Spec.
1	1	11208536	Pipe	
2	1	11208583	Pipe	
3	1	11201453	Pipe	
4	1	11201446	Pipe	
5	1	11201442	Pipe	
6	1	11201448	Pipe	
7	1	11201436	Pipe	
8	1	11201439	Pipe	
9	1	11201441	Pipe	
10	1	11201443	Pipe	
11	1	11206825	Connection	
12	1	11206826	Connection	

Fan

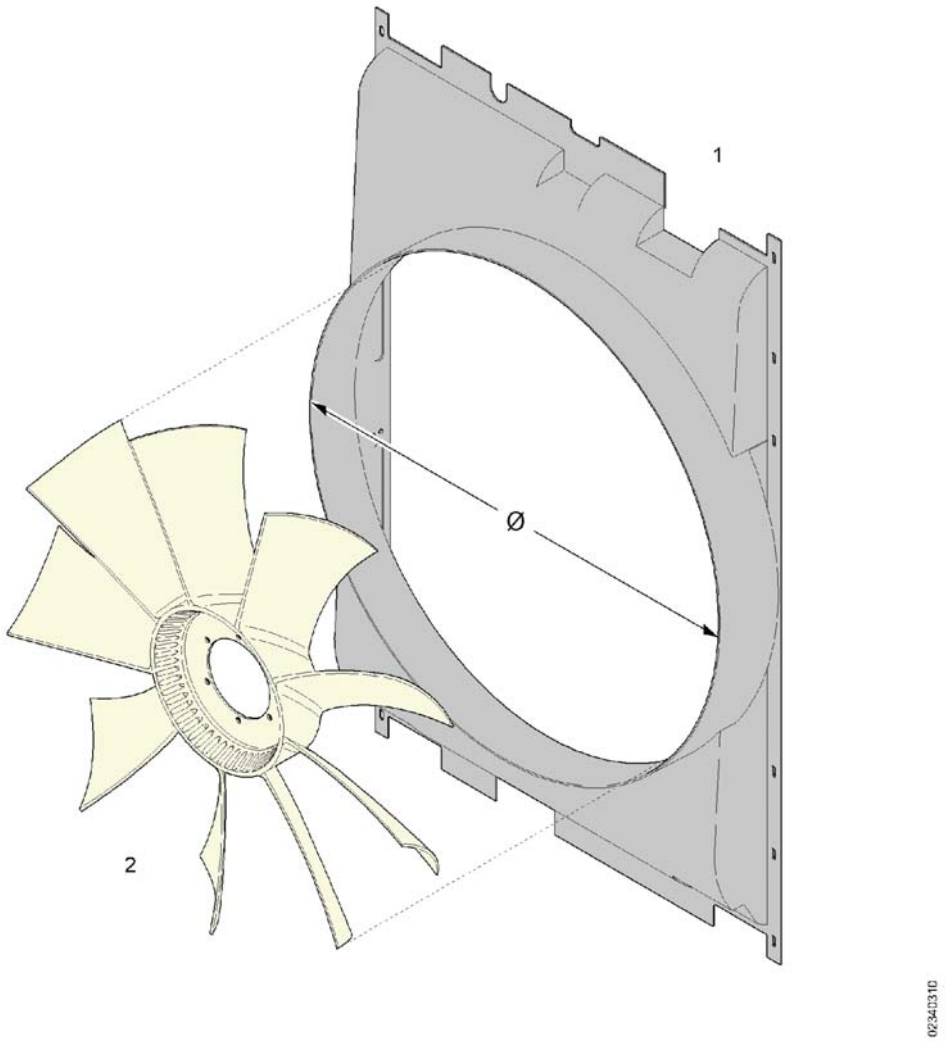

Pos.	Q.	Part n°	Description	Specification
1	1	11203838	Fan shroud	Ø824mm
2	1	10981149	Fan	Ø32"

Fan clutch

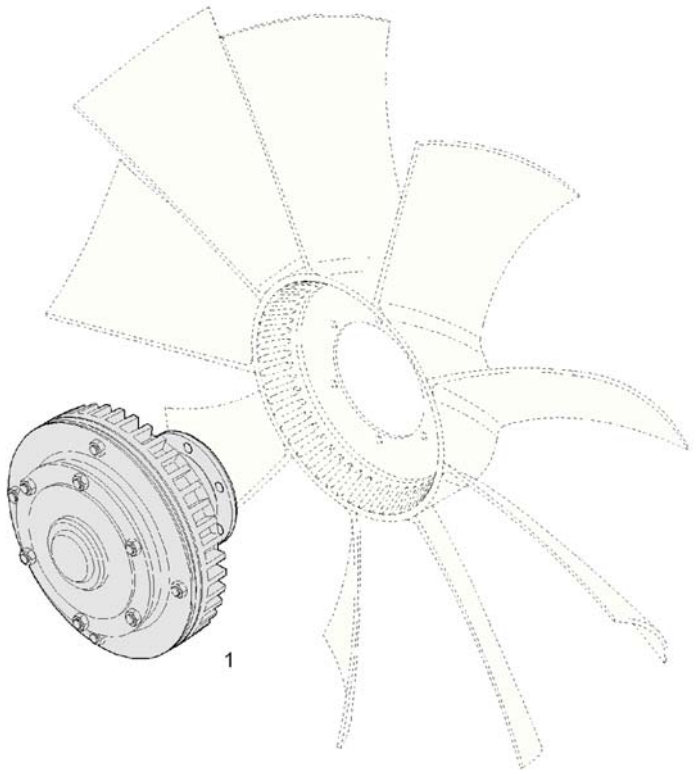

0234/0332

Pos.	Q.	Part n°	Description	Specification
1	1	10981146	Fan clutch	Ø226mm

Expansion tank

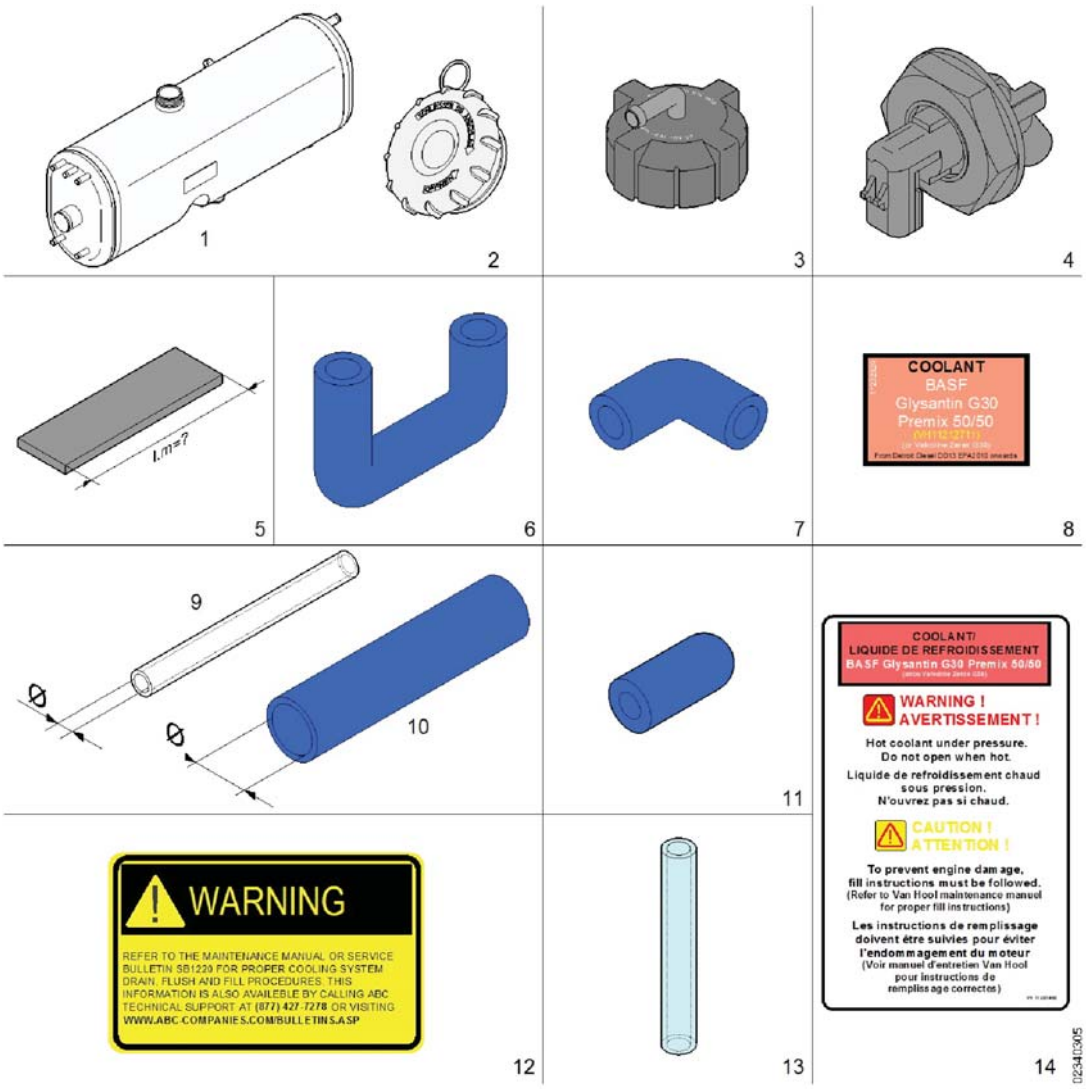

Pos.	Q.	Part n°	Description	Specification
1	1	11353570	Expansion tank	
2	1	11116400	Filler cap	1,5 bar
3	1	11214107	Plug	1,2 bar
4	1	11351795	Level sensor	
5	#m	621203010	Sight glass	Ø15 l.=200mm
6	1	11020174	Silicon hose	Ø15 h.=60x40mm - (B)
7	1	11020179	Silicon hose	Ø15 l.=40x40mm - (B)
8	1	11232329	Decal	"COOLANT..BASF..Glysantin G30"
9	#m	11116400	Filler cap	1,5 bar
10	#m	11376337	Silicon hose	Ø38 l.=1m (B)
11	1	10609221	Plug	Ø10 MAT:SI (B)
12	1	11109825	Decal	"WARNING: refer to the
13	1	621203010	Sight glass	Ø15 l.=200mm
14	1	11281468	Decal	

Engine lubrication: accessories

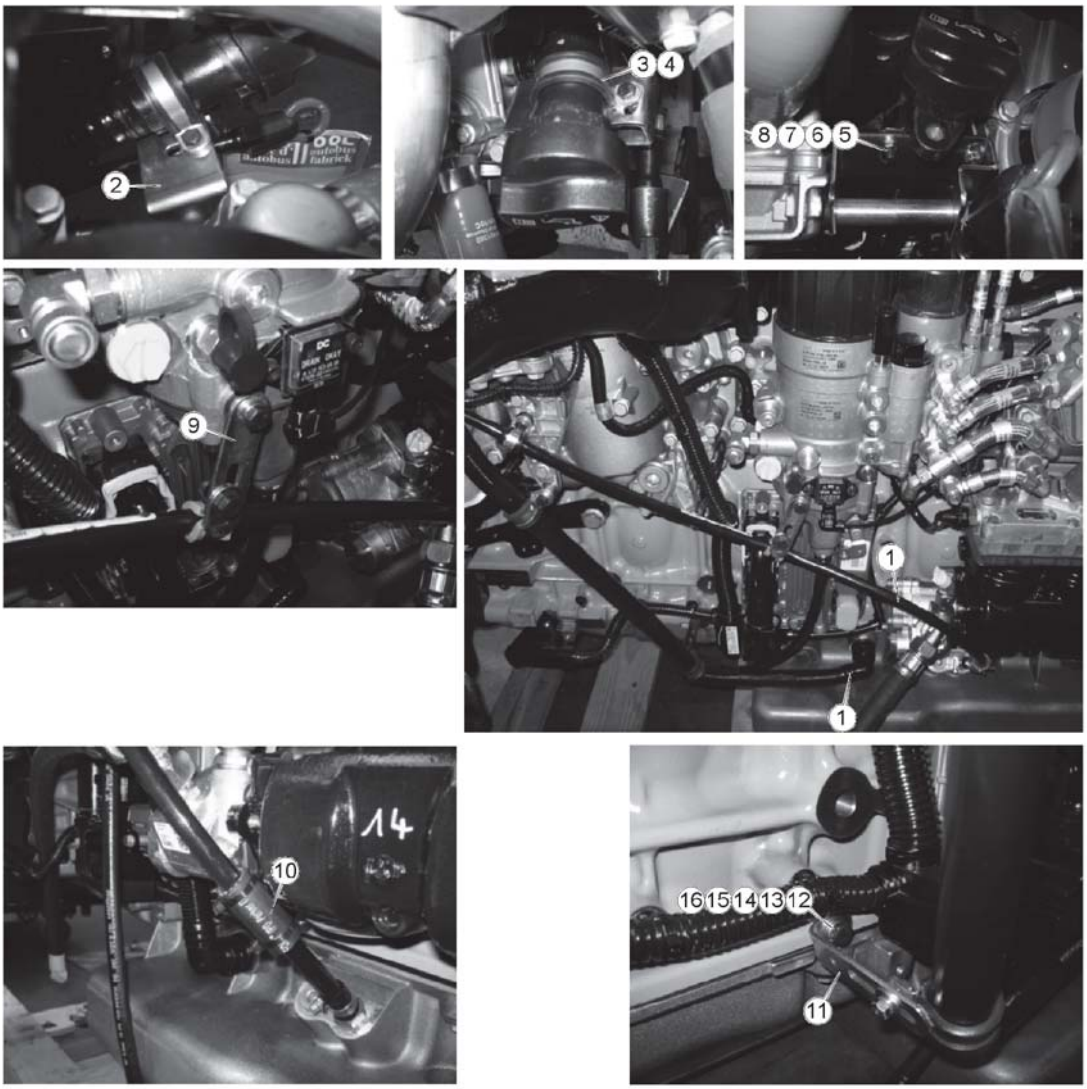

Pos.	Q.	Part n°	Description	Specification
1	-	Detroit Diesel		
2	1	11222216	Bracket	
3	1	637101010	Line clip	Ø34 MAT: IN
4	1	10934007	Line clip	Ø34 b.=15mm MAT: IN
5	2	660220302	Screw	DIN 933 M6x1x20 k.=8.8
6	2	660623504	Washer	DIN 125 Ø6,4x12x1,5
7	2	660636300	Coil spring lock washer	DIN 127 Ø6
8	2	660209922	Nut	DIN 934 M6x1 MAT:IN
9	1	10521891	Bracket	
10	#m	660071402	Hose	Ø23-Ø15 MAT:R (Z)
	2	660766565	Cable binder	(Z) 200x4,6
11	1	10521917	Bracket	
12	1	660222302	Screw	DIN 933 M8x1,25x20 k.=8.8
13	1	660222402	Screw	DIN 933 M8x1,25x25 k.=8.8
14	2	660625805	Washer	DIN 125 A8,4x17x1,6
15	2	660636400	Coil spring lock washer	DIN 127 A8
16	2	660203201	Nut	DIN 934 M8x1.25 k.=8

Belts

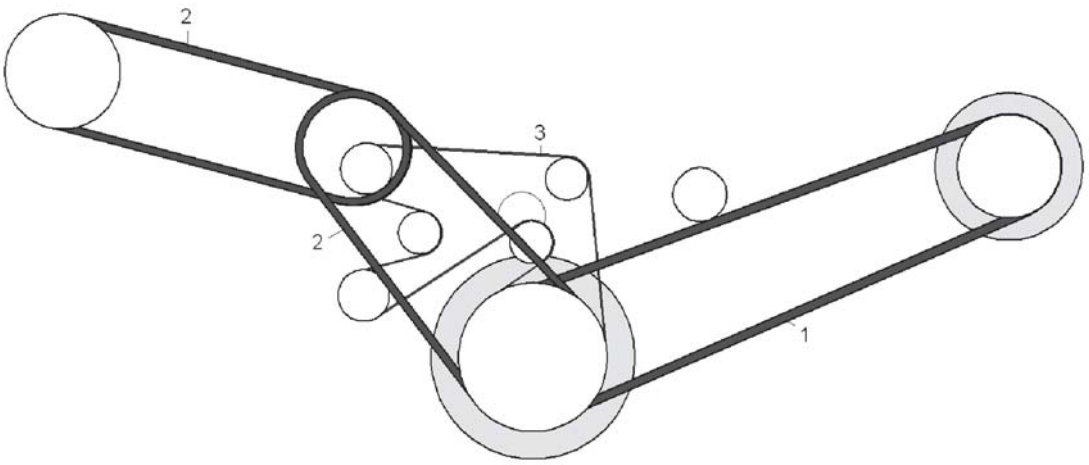

Pos.	Q.	Part n°	Description	Specification
1	1	11081176	Double V-belt	2XPB l.=2590
2	2	639602001	Set of V-belts	XPB l.=1700
3	1	11204564	V-ribbed belt	8PK l.=2437

Crankshaft belt pulley

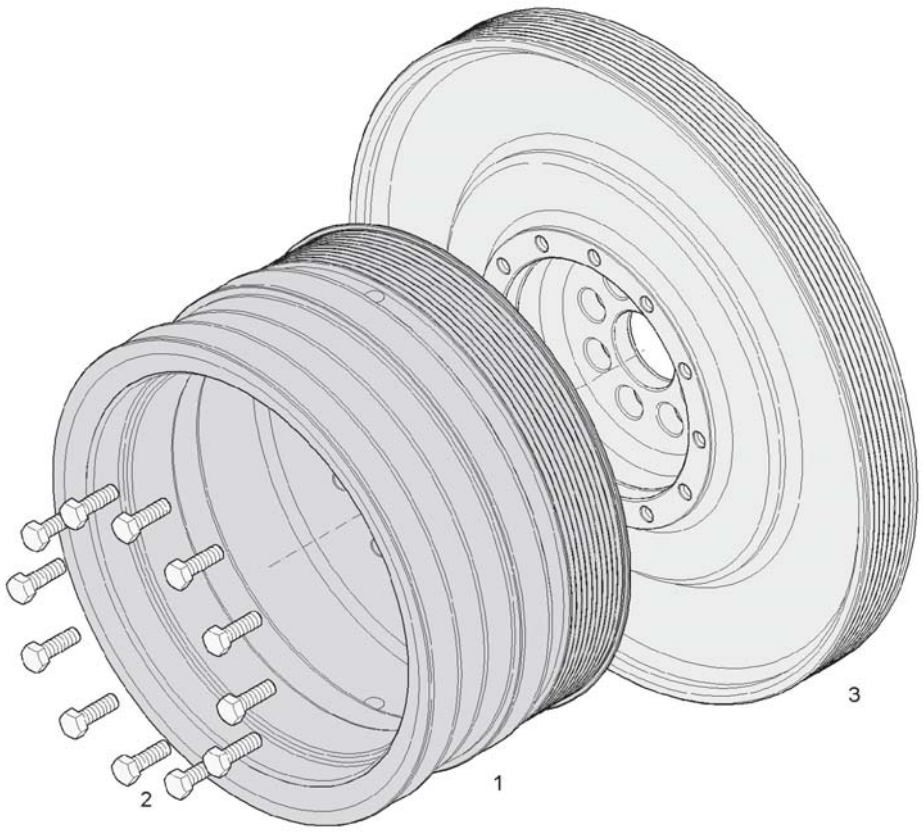

Pos.	Q.	Part n°	Description	Specification
1	1	11200243	Crankshaft belt pulley	
2	12	660222404	Screw	DIN 933 M8x1,25x25 k.=10.9
3	1	11198958	Vibration damper	

Pulleys

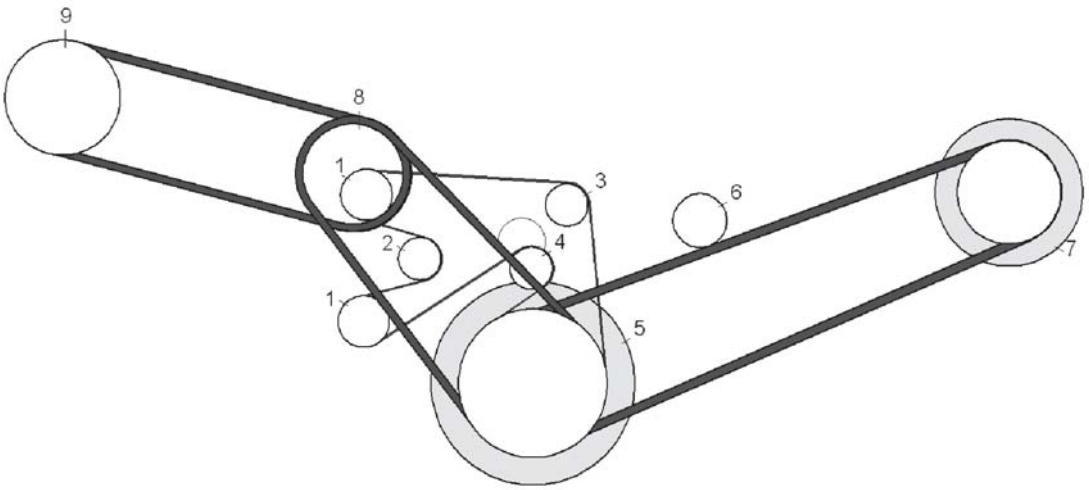

Pos.	Q.	Part n°	Description	Specification
1	2	11250743	Pulley	Ø91mm
2	1	11204418	Roller	Ø75mm
3	1	11272930	Roller	Ø74mm
4	1	11204419	Belt tensioner	Ø75mm
5	1	»0246.01-1...	Crankshaft belt pulley	
6	1	11226642	Roller	
7	1	»0814.01-....	Climate control compressor	
8	1	10783622	Pulley, complete	Ø204mm
9	1	10880467	Pulley	Ø204mm

Fan drive: tensioning system

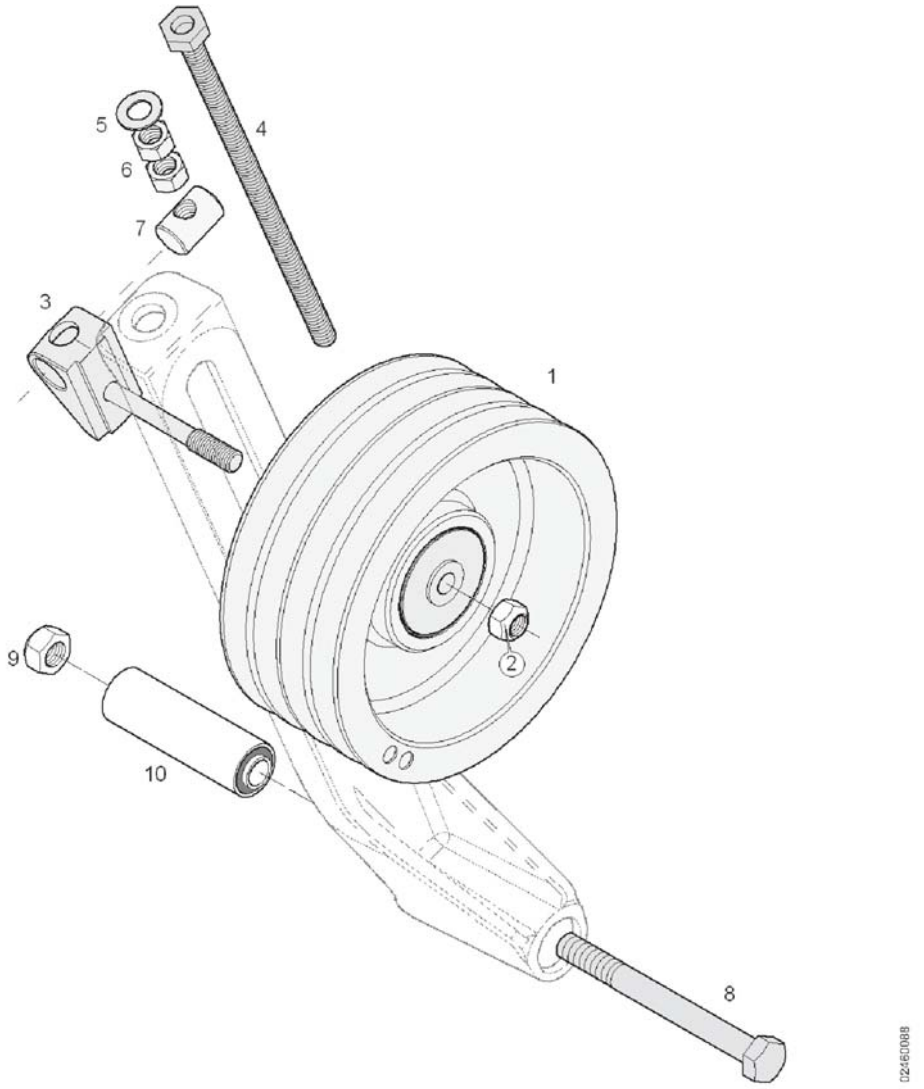

Pos.	Q.	Part n°	Description	Specification
1	1	10783622	Pulley, complete	Ø204mm
2	1	660207406	Lock nut	DIN 980 M12x1,75 k.=8
3	1	10716944	Pivot pin	M12
4	1	611406410	Screw	M12x1,75x255
5	1	660629103	Washer	DIN 125 A13x24x2,5mm
6	2	660203401	Nut	DIN 934 M12x1,75 k.=8
7	1	611405840	Threaded ring	Ø21x31 M12
8	1	660248301	Screw	DIN 931 M14x2x140 k.=8.8
9	1	660207206	Lock nut	DIN 980 M14x2 k.=8
10	1	11159064	Silentbloc	l.=100mm

Climat control compressor: tensioning system

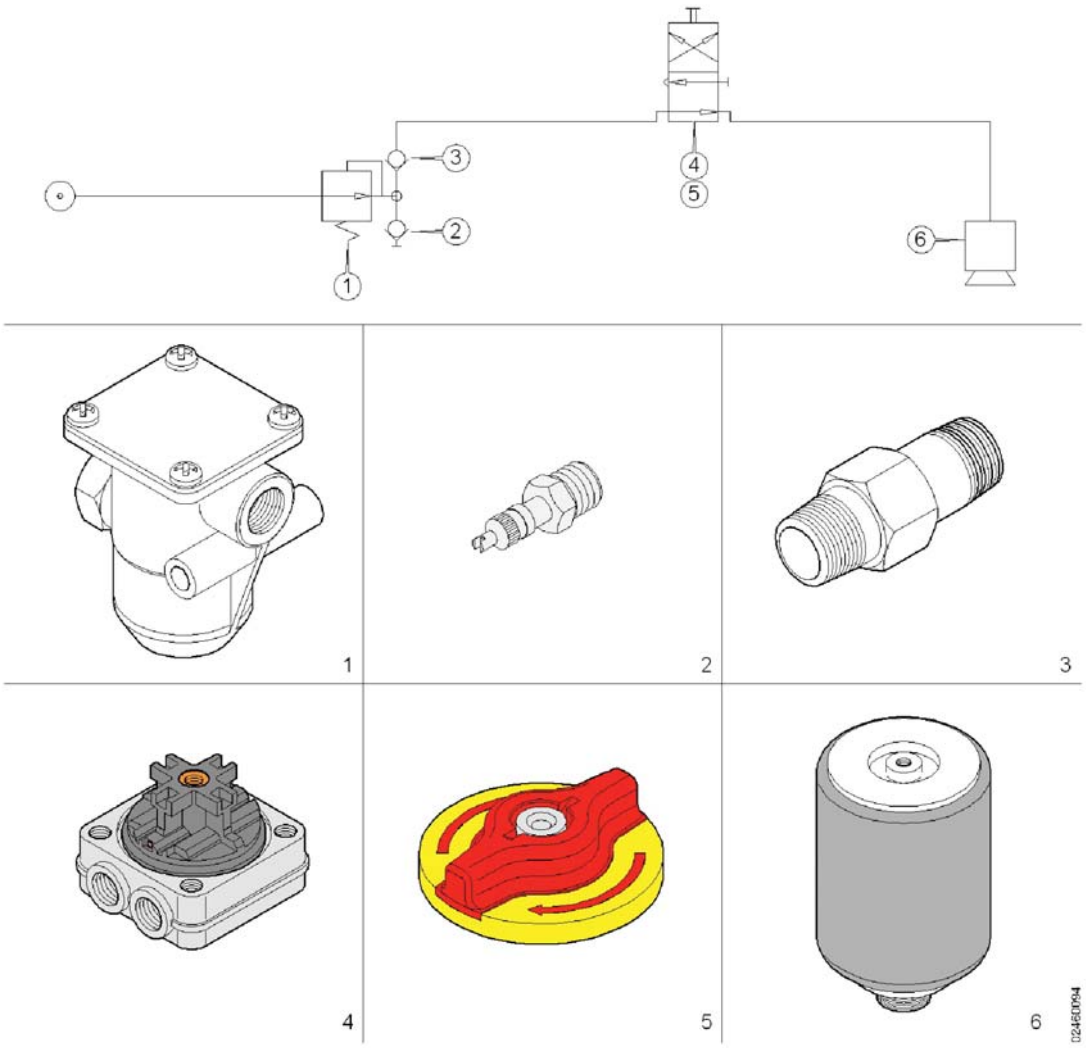

Pos.	Q.	Part n°	Description	Specification
1	1	637211400	Pressure limiting valve	6,5 BAR
2	1	637209070	Test connection	1/4"
3	1	637208460	One-way valve	
4	1	637210710	Cock	
5	1	637410980	Button	
6	1	10635845	Air-bellows	

Sensor

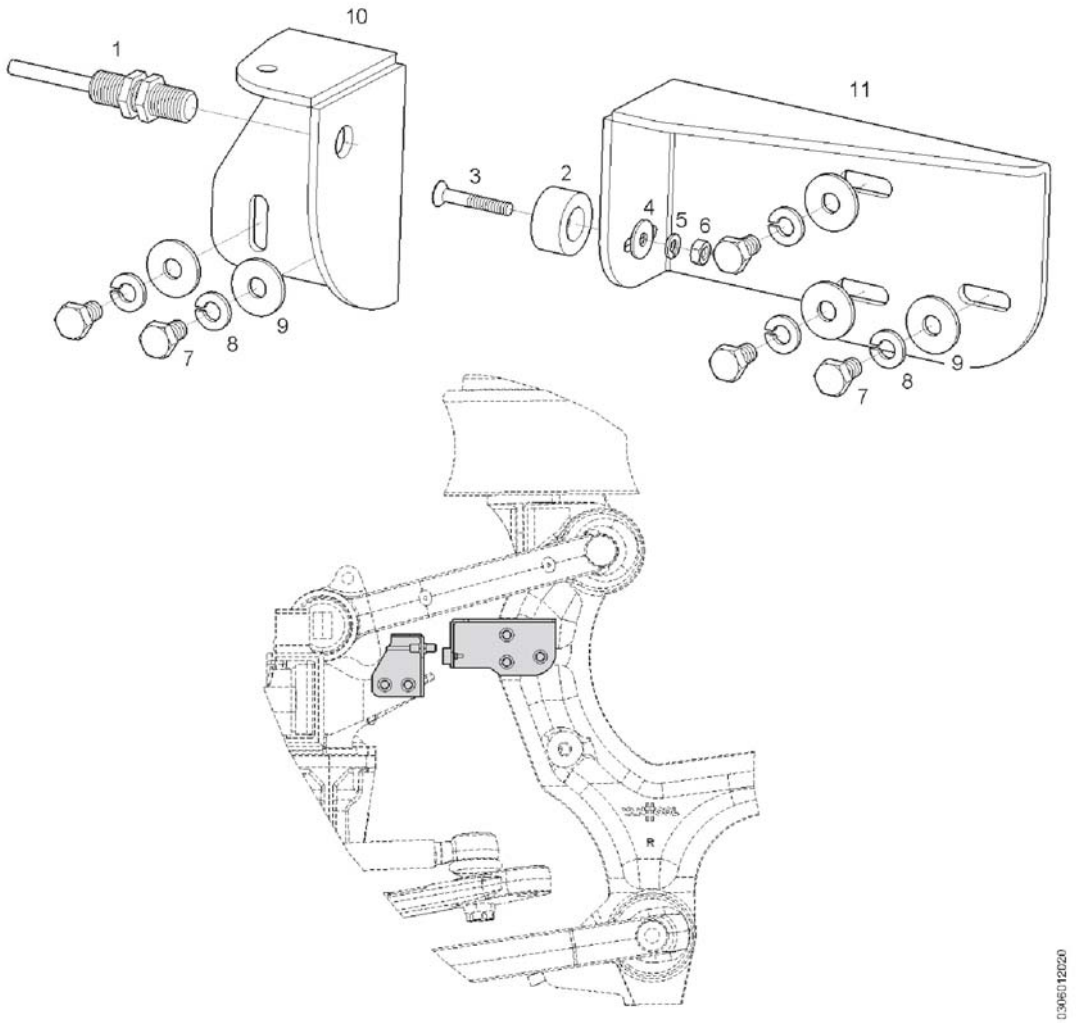

Pos.	Q.	Part n°	Description	Specification
1	1	10856415	Proximity switch	NO Ø10mm
2	1	10720431	Magnet	
3	1	10714367	Screw	DIN 7991 M4x0.70x25 MAT: IN
4	1	660621205	Washer	DIN 9021 M4 MAT: IN
5	1	660636102	Coil spring lock washer	DIN 127 A4 MAT:IN
6	1	660209902	Nut	DIN 934 M4x0.70 MAT:IN
7	5	660229752	Screw	DIN 933 M6x16 MAT:IN
8	5	660636302	Coil spring lock washer	DIN 127 A6 MAT:IN
9	5	660623508	Washer	DIN 9021 M6 MAT:IN
10	1	10948568	Bracket	
11	1	10948451	Bracket	

Components

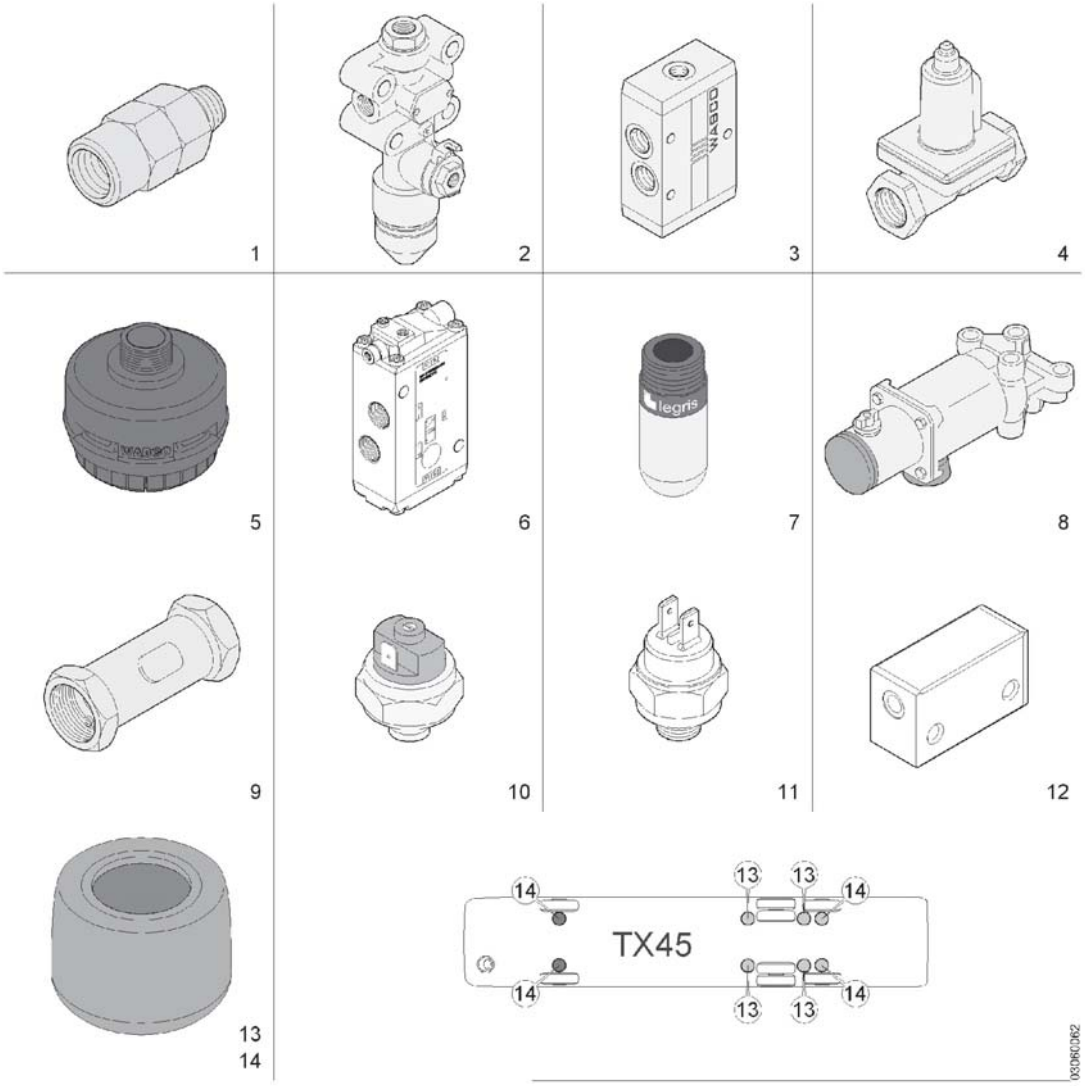

Pos.	Q.	Part n°	Description	Specification
1	2	637209150	Line filter	
2	3	637208390	Leveling valve	
3	6	637212970	Valve	
4	2	10656434	Overflow valve	0,8bar
5	2	10532846	Muffler	M22x1,5
6	2	11314253	Valve	3/2
7	2	10726332	Muffler	
8	2	11102170	Solenoid valve	4/2
	*1	11285567	Repair kit	
9	2	637213160	One-way valve	
10	2	637205390	Contact	0,5BAR N.O.
11	1	637201210	Pressure Switch	NG 2 bar
12	1	637210600	Two-way valve	
13	4	624319630	Air-bellows	Phoenix
14	4	624319680	Air-bellows	Phoenix

Leveling valve, control

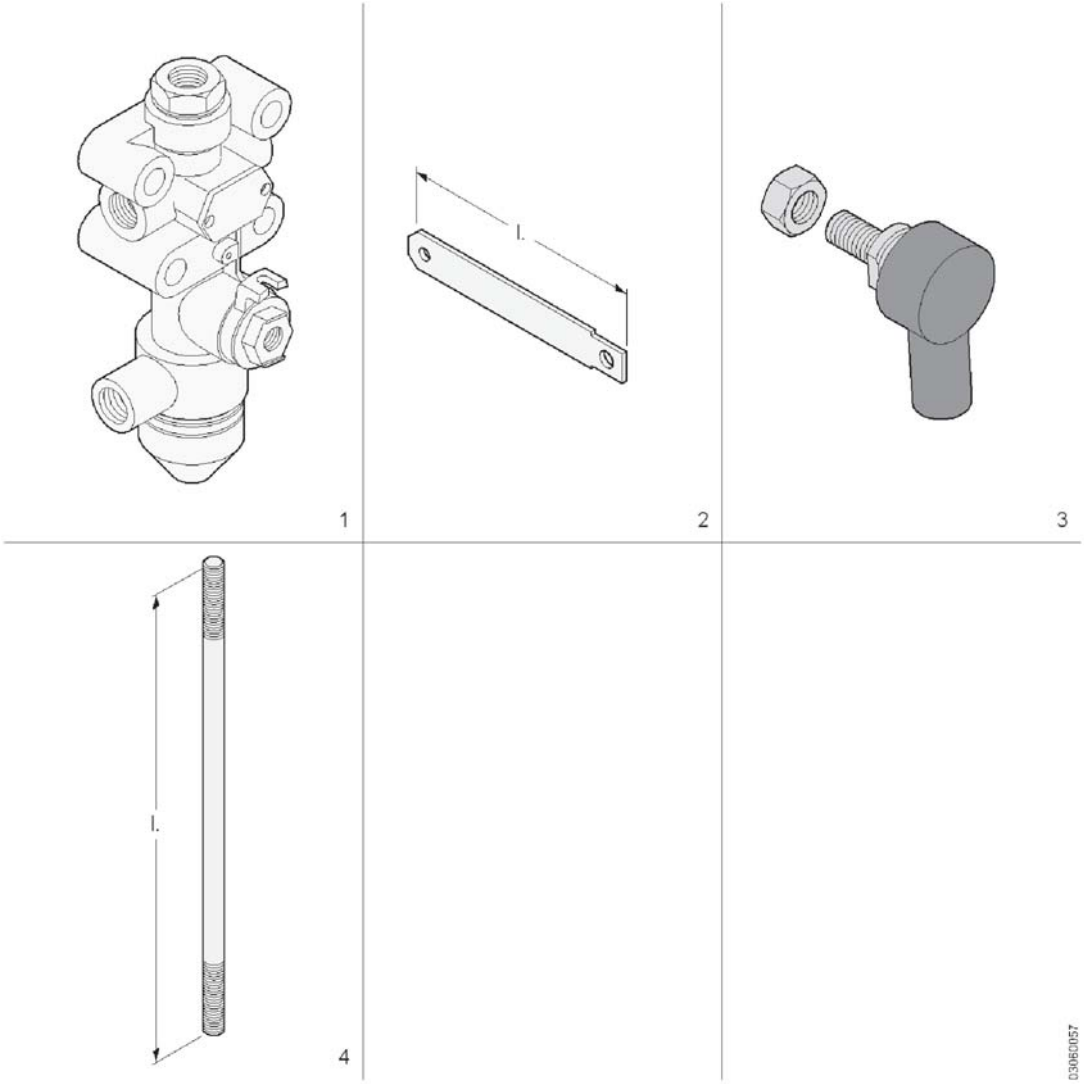

Pos.	Q.	Part n°	Description	Specification
1	3	»0306.02-....	Components	
2	1	10728432	Lever	l.=135mm
	2	617201810	Lever	l.=230mm
3	6	631202250	Ball joint	M6 Re
4	2	10700402	Rod	M6 l.=112mm
	1	10698267	Rod	M6 l.=160mm

Front axle: shock absorbers (FSD Technology)

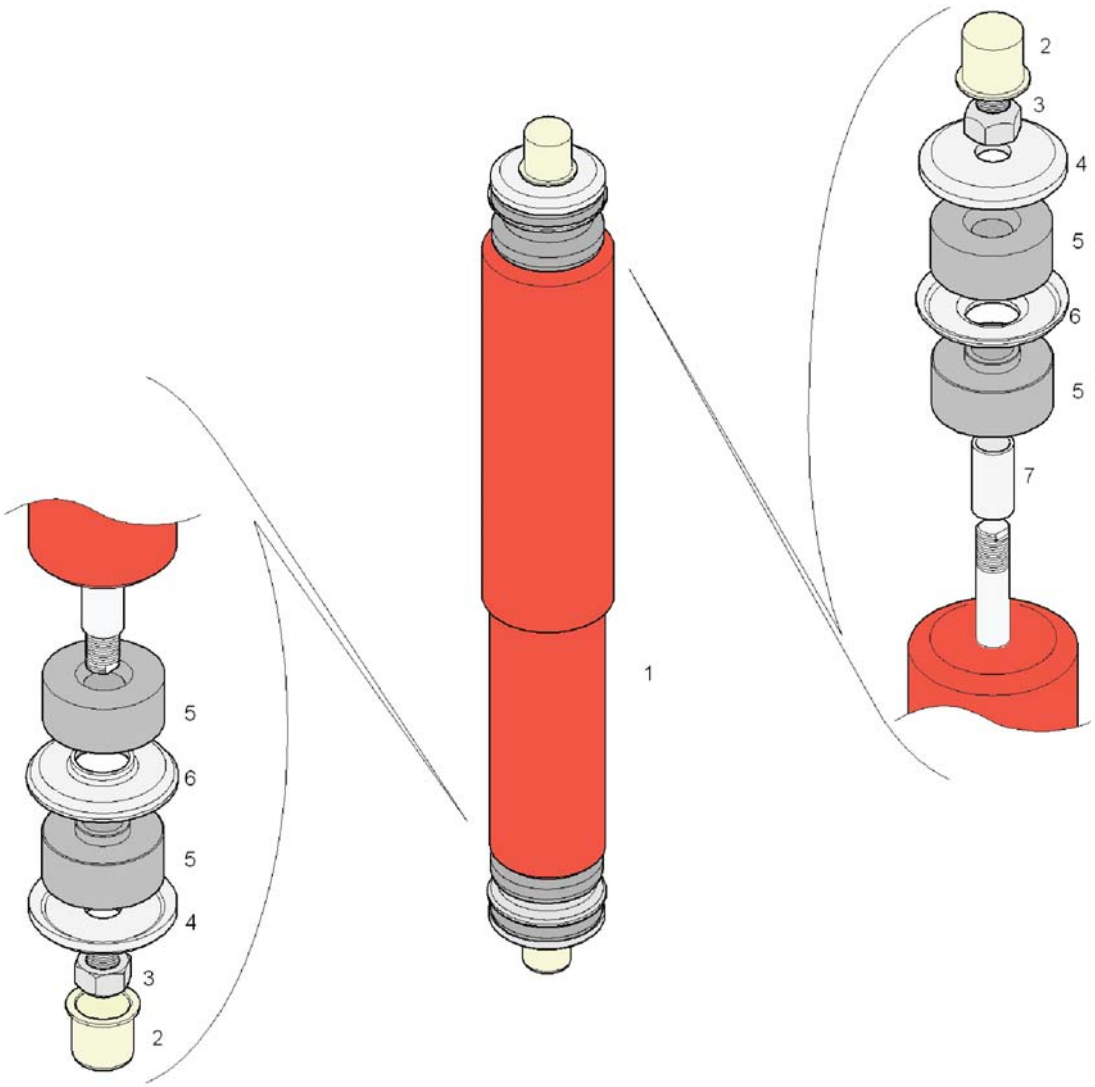

Pos.	Q.	Part n°	Description	Specification
1	2	11154113	Shock absorber	
2	*2	624313620	Dust cap	
3	*2	660207210	Lock nut	DIN 980 M16x1,5 k.=8
4	*2	624313610	Disk	Ø70mm
5	*4	624313430	Rubber	Ø60x32,5
6	*2	631000040	Disk	Ø70mm
7	*2	624313470	Bush	Ø20xØ16 l.=53mm

Air springs

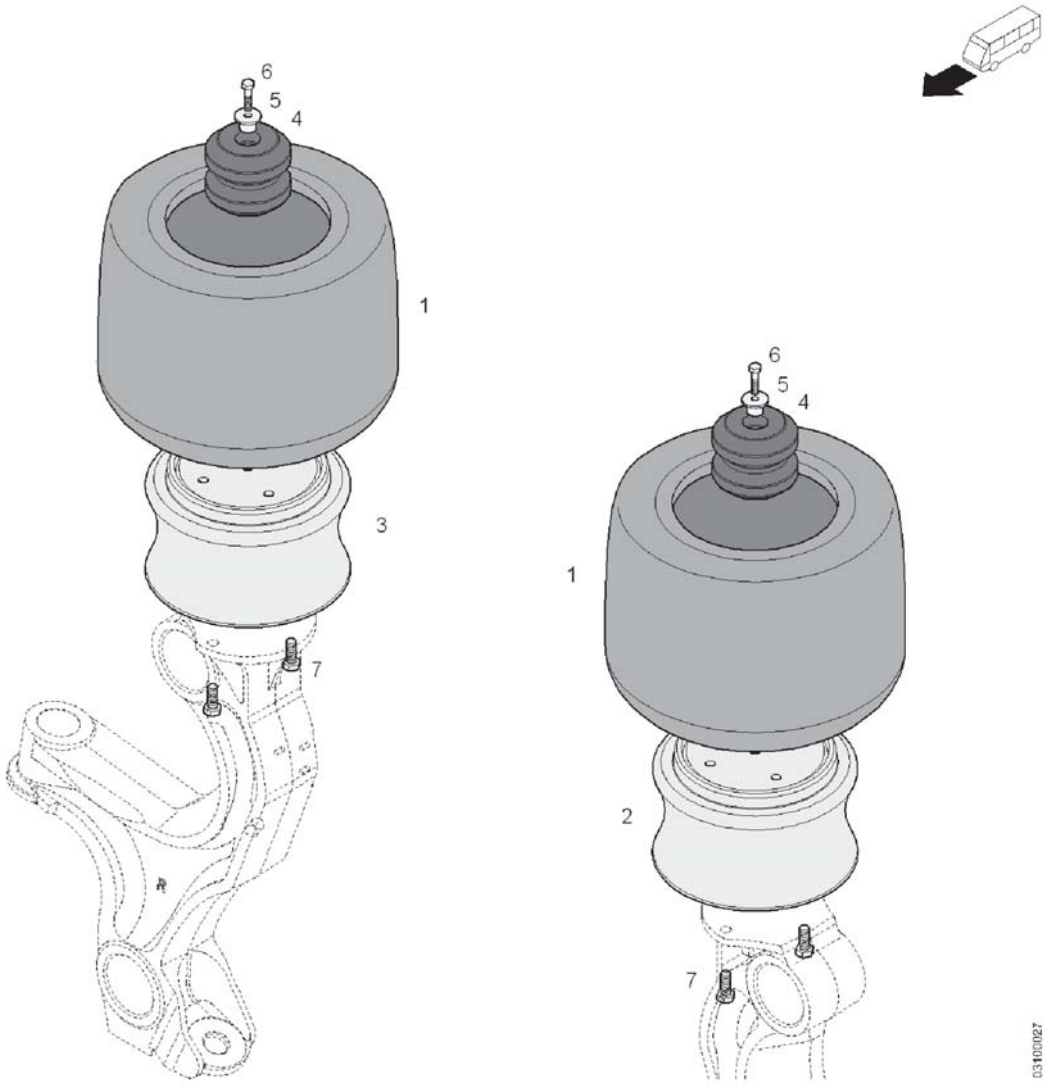

Pos.	Q.	Part n°	Description	Specification
1	2	»0306.02-....	Components	
2	1	10786609	Piston	Li
3	1	10786611	Piston	Re
4	2	634304040	Spring	MAT:R
5	2	10562451	Bush	Ø32xØ20x19,5
6	2	660242401	Screw	DIN 931 M8x35 k.=8.8
7	4	660226501	Screw	DIN 933 M12x1,75x30 k.=8.8

Suspension beams

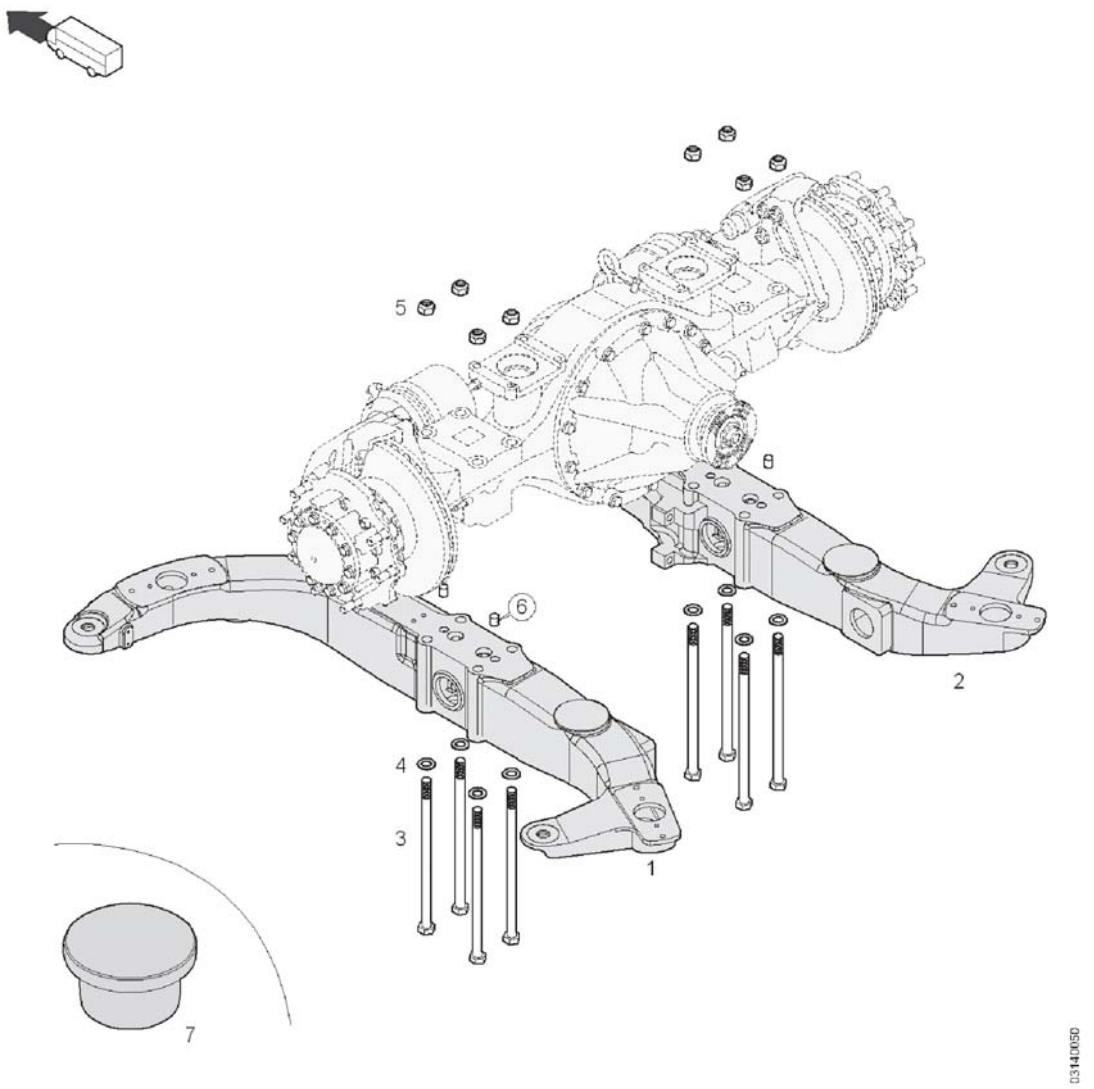

Pos.	Q.	Part n°	Description	Specification
1	1	10556543	Suspension beam	Li
2	1	10556541	Suspension beam	Re
3	8	624324910	Screw	M24x1,5x445 k.=10.9
4	8	660637422	Washer	DIN 6916 25x44x4
5	8	660207519	Lock nut	DIN 980 M24x1,5 k.=10
6	4	614310840	Dowel pin	Ø22 l.=25mm
7	8	637102260	Plug	M14x1,5

Laminated spring

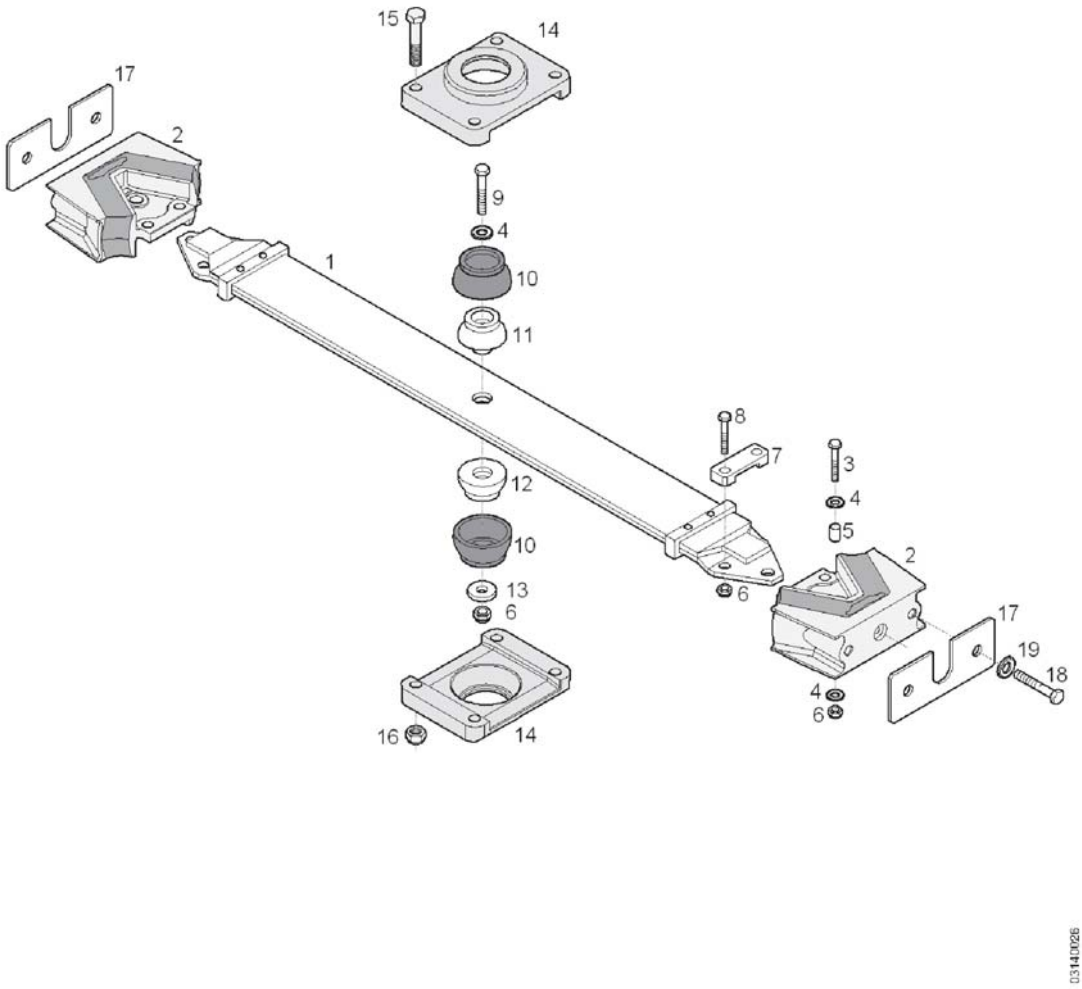

Pos.	Q.	Part n°	Description	Specification
1	1	624324690	Laminated spring	
2	2	10739069	Rubber-metal mount	"Phoenix" SK 196835 (RAL 9005)
3	2	660251315	Screw	DIN 960 M16x1,5x55 k.=10.9
4	5	660630990	Washer	DIN 6916 A17
5	2	660620264	Sleeve	DIN 7346 Ø20x24
6	7	660207214	Lock nut	DIN 980 M16x1,5 k.=10
7	2	624324680	Bracket	
8	4	660251314	Screw	DIN 960 M16x1,5x65 k.=10.9
9	1	660251266	Screw	DIN 960 M16x1,5x80 k.=10.9
10	2	634301630	Rubber	
11	1	614310300	Pivot pin	
12	1	614306230	Holder	Ø75x36
13	1	614307720	Ring	Ø44xØ17x8
14	1set	10663983	Mounting bracket	
15	4	660251258	Screw	DIN 960 M16x1,5x80 k.=8.8
16	4	660207210	Lock nut	DIN 980 M16x1,5 k.=8
17	#	10582117	Spacer	d.=3mm
	#	614310760	Spacer	d.=5mm

Laminated spring

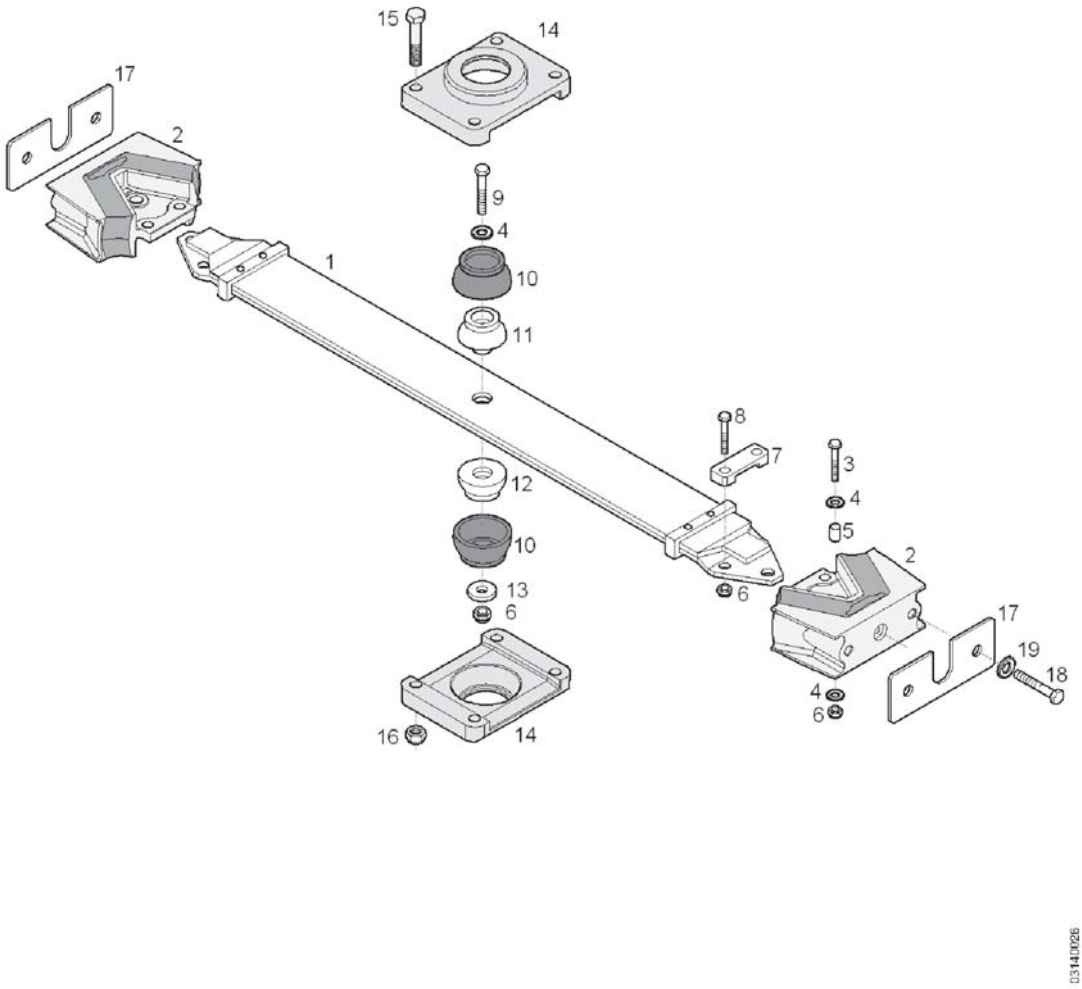

Pos.	Q.	Part n°	Description	Specification
18	#	660228503	Screw	DIN 933 M16x2x35 k.=10.9
	#	10577252	Screw	DIN 933 M16x2x40 k.=10.9
	#	660228702	Screw	DIN 933 M16x2x45 k.=10.9
	#	10582084	Screw	DIN 933 M16x2x50 k.=10.9
19	#	660630990	Washer	DIN 6916 A17

Torque rod

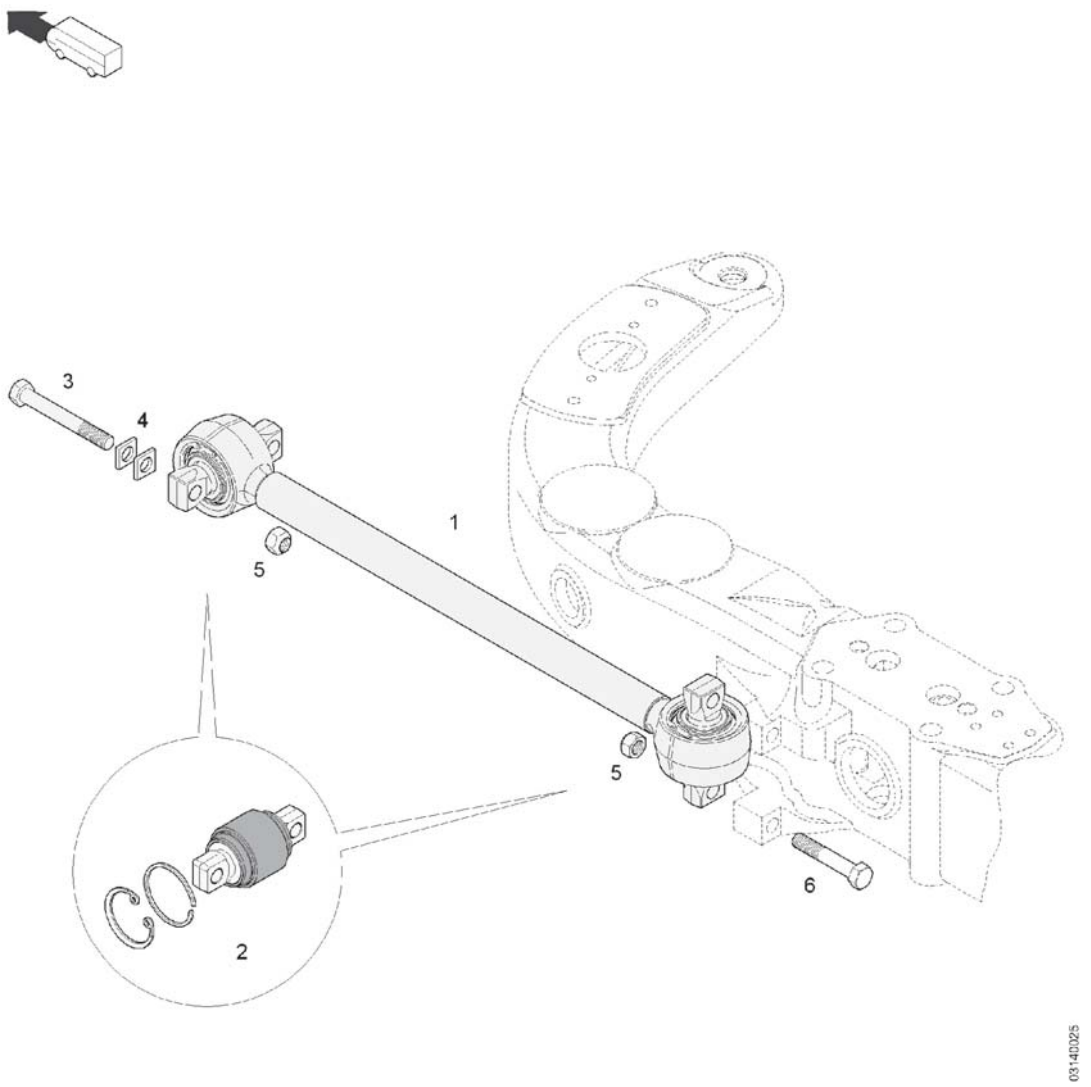

Pos.	Q.	Part n°	Description	Specification
1	2	624304600	Torque rod	
2	*2	634300770	Repair kit	
3	4	660251286	Screw	DIN 960 M18x1,5x140 k.=8.8
4	8	614310830	Spacer	d.=5mm
5	8	660207288	Lock nut	DIN 980 M18x1,5 k.=8
6	4	660251280	Screw	DIN 960 M18x1,5x100 k.=8.8

Anti-roll bar

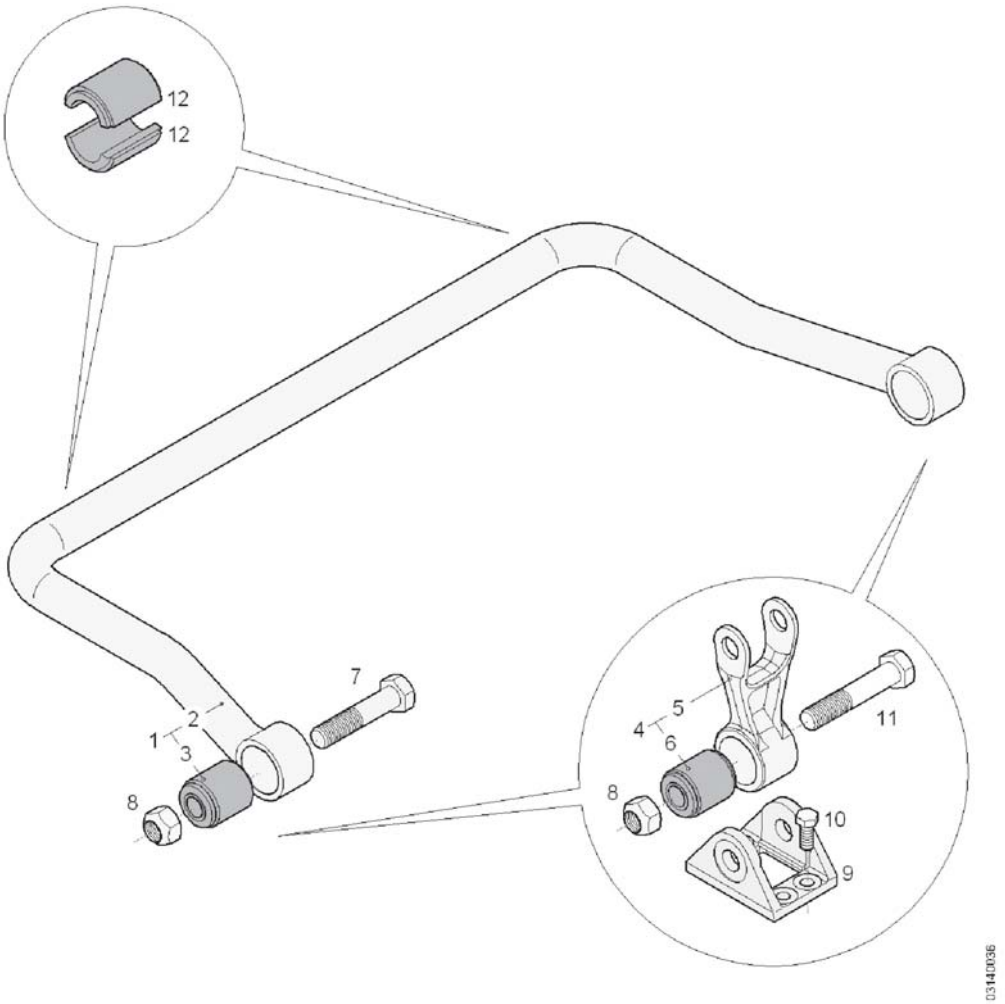

Pos.	Q.	Part n°	Description	Specification
1	1	10646979	Anti-roll bar, complete	
2	*1	10646976	Rod	
3	*2	4639392	Rubber-metal mount	65 Shore A Ø55xØ24x65
4	2	10647730	Swivel, complete	
5	*1	10647727	Swivel	
6	*1	4639392	Rubber-metal mount	65 Shore A Ø55xØ24x65
7	2	660249923	Screw	DIN 931 M24x3x110 k.=8.8
8	4	660207521	Lock nut	DIN 980 M24x3 k.=8
9	2	10575379	Bracket	
10	8	660228018	Screw	DIN 933 M14x2x35 k.=8.8
11	4	10566409	Screw	DIN 931 M24x3x125 k.=8.8
12	4	624317250	Rubber-metal mount	60 Shore A

Drive axle: shock absorbers (FSD Technology)

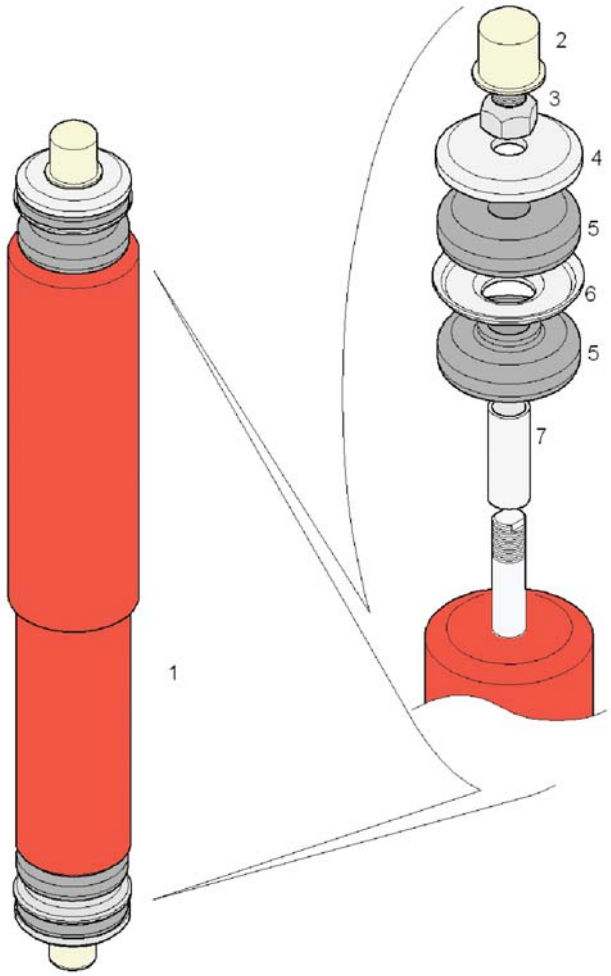

Pos.	Q.	Part n°	Description	Specification
1	1	11154114	Shock absorber	
2	*2	624313620	Dust cap	
3	*2	660207210	Lock nut	DIN 980 M16x1,5 k.=8
4	*2	624313610	Disk	Ø70mm
5	*4	624313430	Rubber	Ø60x32,5
6	*2	631000040	Disk	Ø70mm
7	*2	624313470	Bush	Ø20xØ16 l.=53mm

Air springs

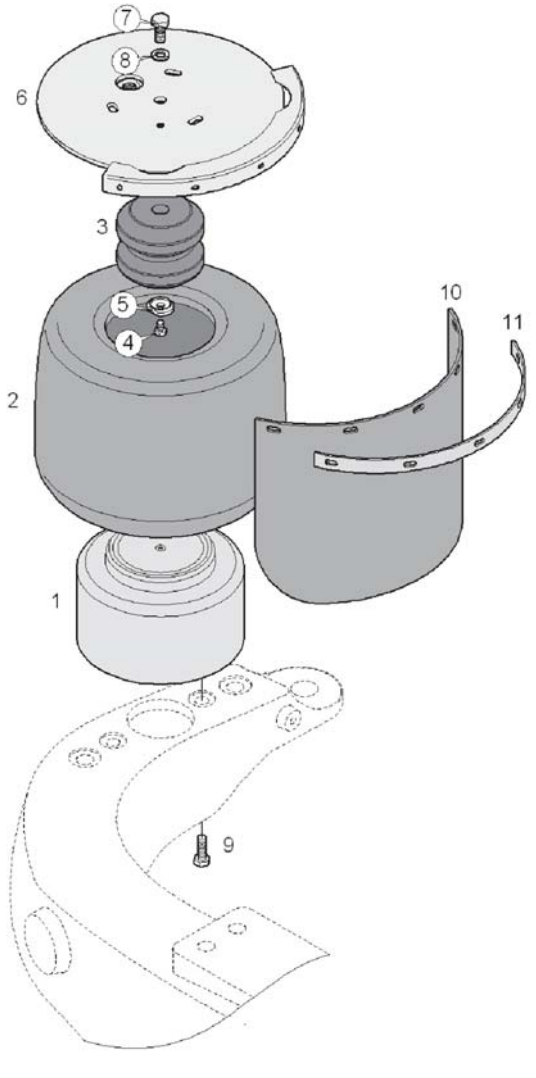

Pos.	Q.	Part n°	Description	Specification
1	4	10694511	Piston	
2	4	»0306.02-....	Components	
3	4	634304040	Spring	MAT:R
4	4	660222111	Screw	DIN 933 M8x1,25x12 k.=8.8
5	4	10555807	Ring	Ø32xØ25x5
6	4	10694071	Sheet	
7	4	660219729	Screw	DIN 961 M12x1,5x25
8	4	660636600	Coil spring lock washer	DIN 127 A12
9	8	660224503	Screw	DIN 933 M10x1,5x30 k.=8.8
10	4	10664476	Mudflap	418x260
11	4	10664478	Fastener	422x20

Trailing axle: shock absorbers (FSD Technology)

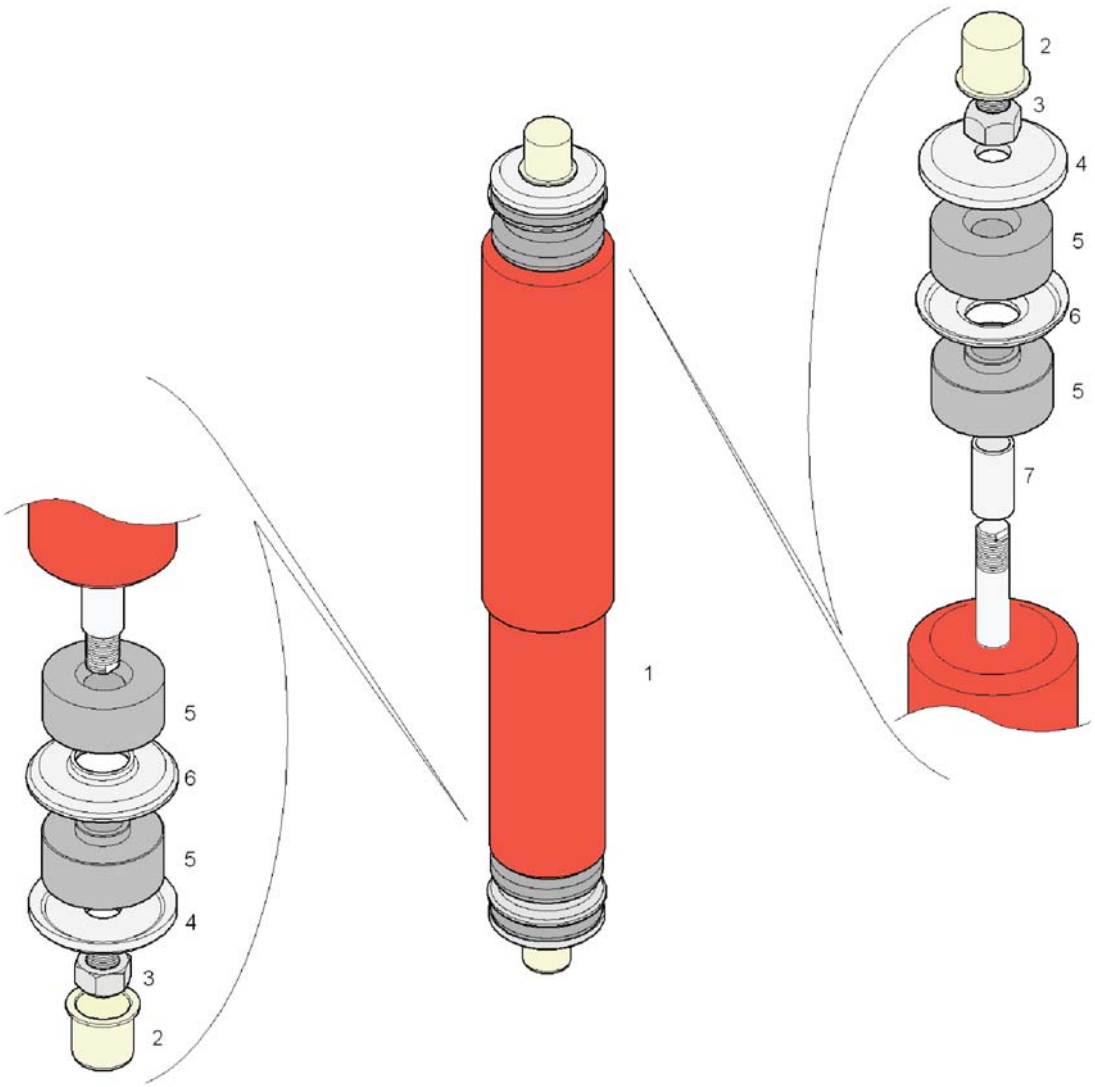

Pos.	Q.	Part n°	Description	Specification
1	2	11154113	Shock absorber	
2	*2	624313620	Dust cap	
3	*2	660207210	Lock nut	DIN 980 M16x1,5 k.=8
4	*2	624313610	Disk	Ø70mm
5	*4	624313430	Rubber	Ø60x32,5
6	*2	631000040	Disk	Ø70mm
7	*2	624313470	Bush	Ø20xØ16 l.=53mm

Air springs

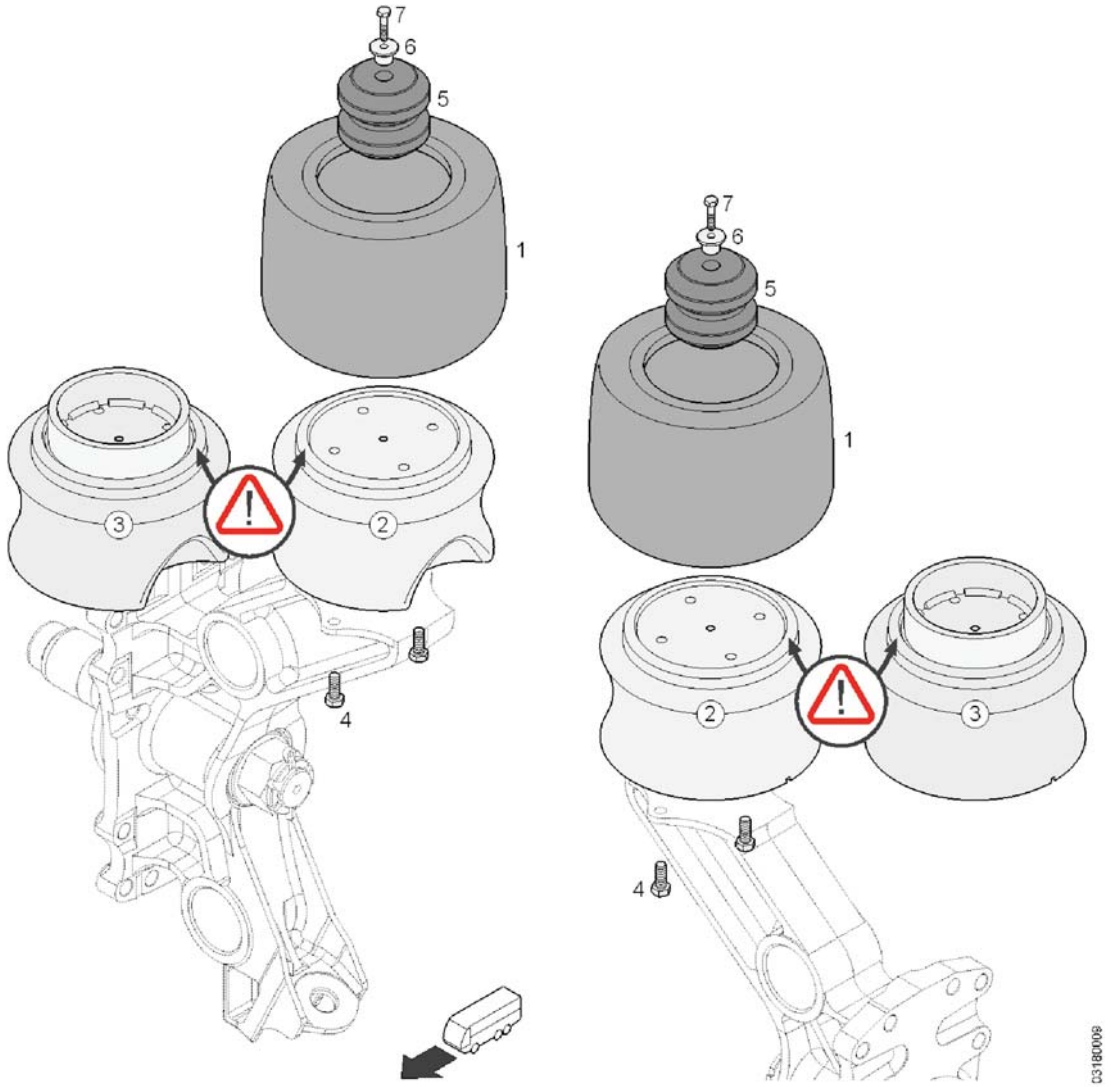

Pos.	Q.	Part n°	Description	Specification
1	2	»0306.02-....	Components	
2	2	10659027	Piston	
3	2	11379251	Piston	
4	4	660226501	Screw	DIN 933 M12x1,75x30 k.=8.8
5	2	634304040	Spring	MAT: R
6	2	10562451	Bush	Ø32xØ20x19,5
7	2	660242401	Screw	DIN 931 M8x35 k.=8.8

Wheels, steel

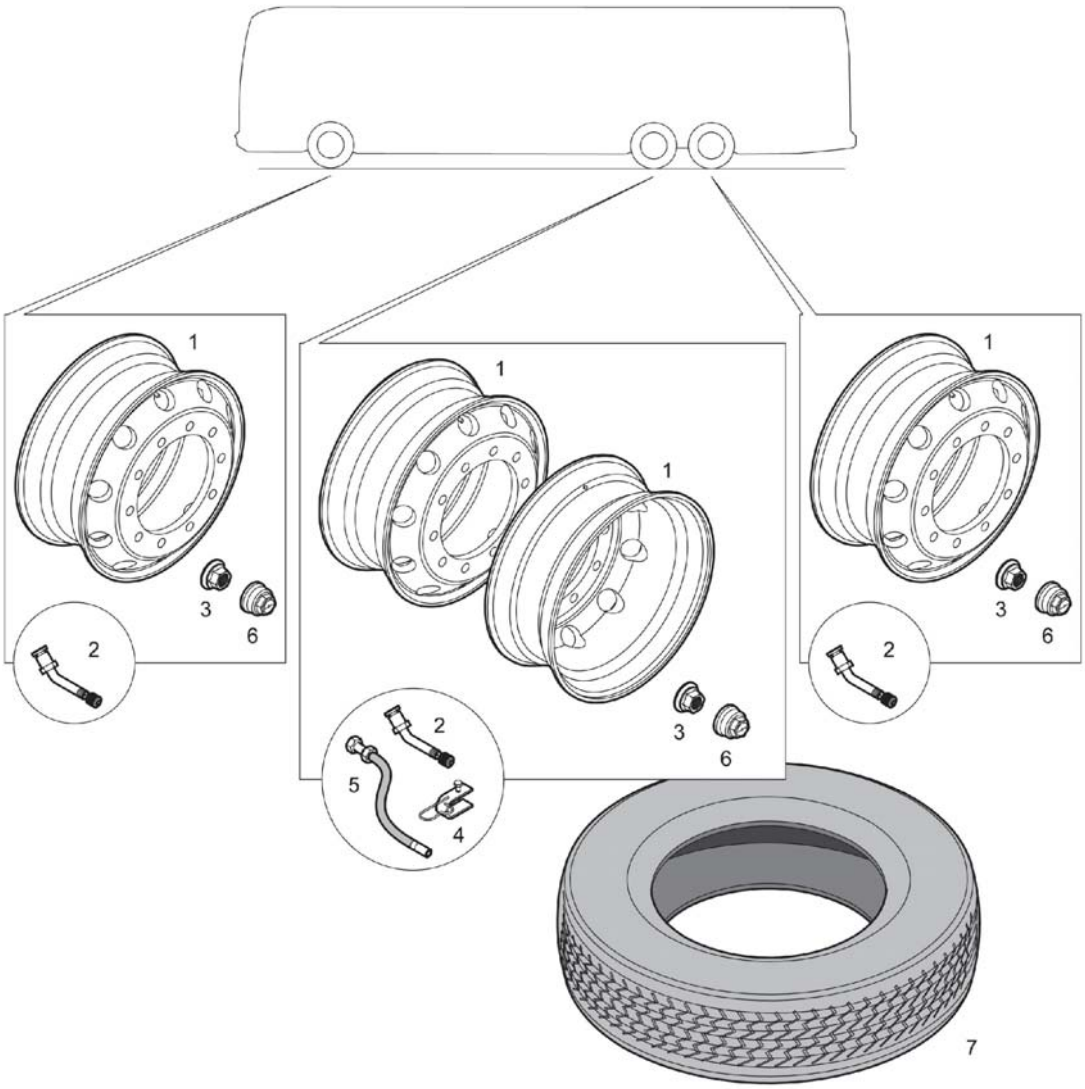

Pos.	Q.	Part n°	Description	Specification
1	8	11383616	Wheel	22,5x9,00 (RAL 9003)
2	*1	10802172	Tire valve	
3	60	10723892	Wheel nut	M22x1,5
4	2	634319410	Clamp	
5	2	634319450	Extension	
6	60	10596486	Wheel nut cap	MAT: P
7	#	»0338.00-....	Tires	

Wheels, light alloy

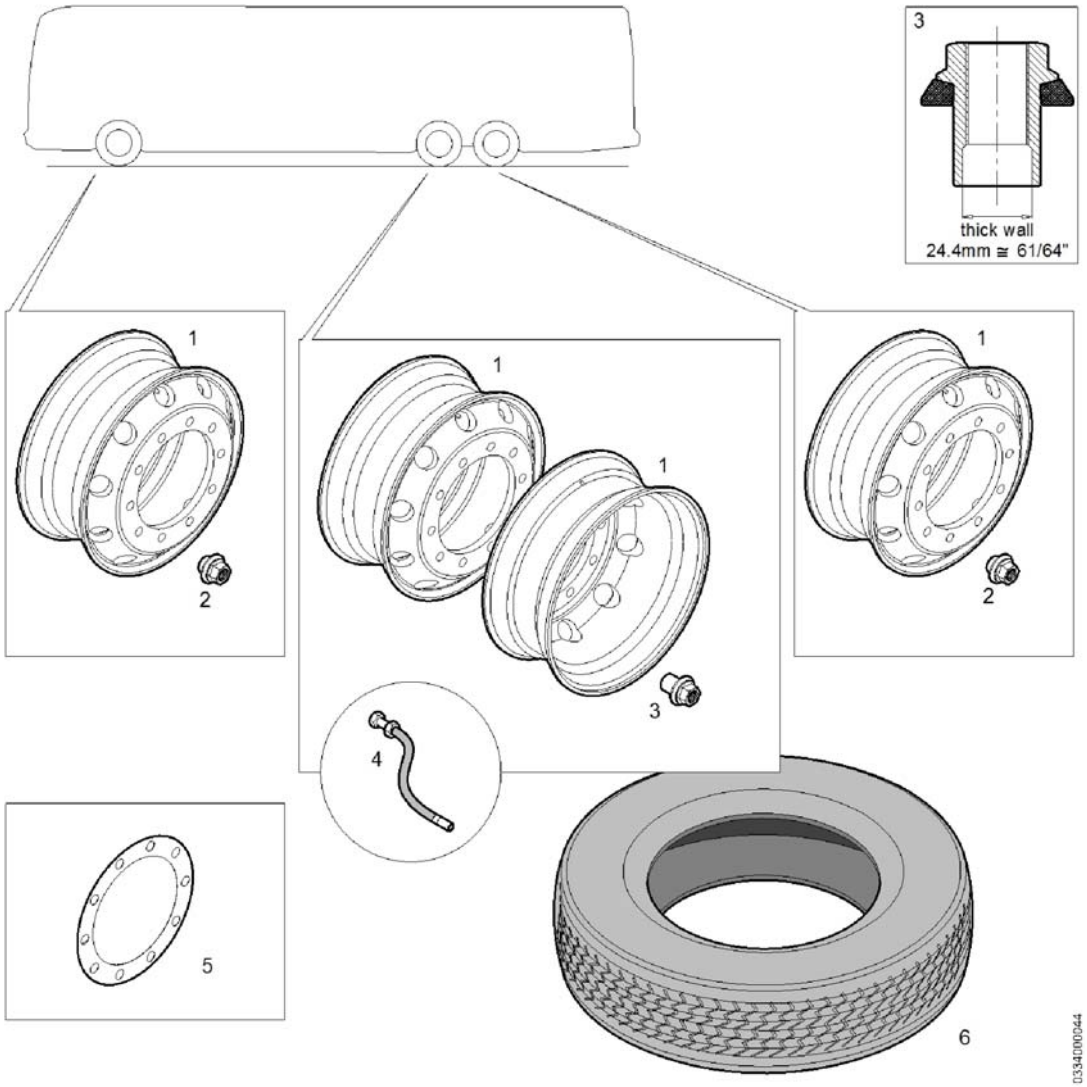

Pos.	Q.	Part n°	Description	Specification
1	9	11417208	Wheel	22,5x9,00 MAT:AL
2	40	10516438	Wheel nut	M22x1,5 (SHORT SHANK)
3	20	10941058	Wheel nut	M22x1,5 (LONG SHANK)
4	2	10932019	Extension	
5	6	10772493	Protection	Ø335mm-d.=0,75mm
6	9	»0338.00-....	Tires	

Tires

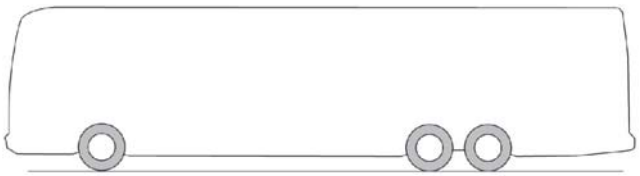

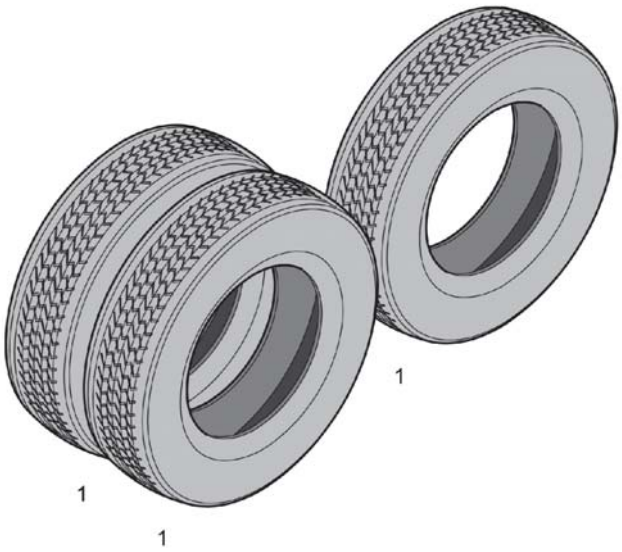

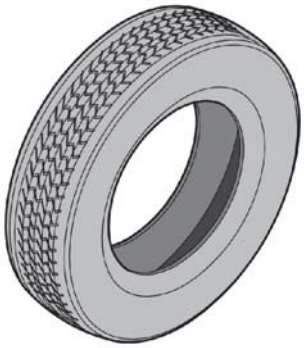

Pos.	Q.	Part n°	Description	Specification
1	#	11350608	Tire	Goodyear 315/80 R22.5 LHSII-HL

Tire pressure guarding system

3

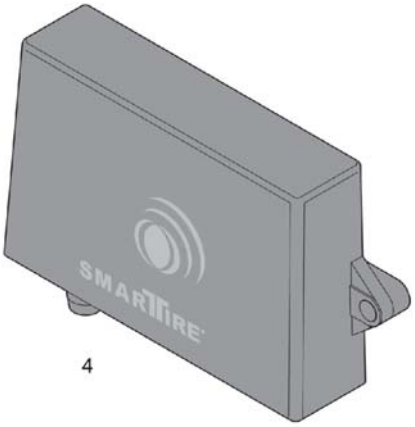

4

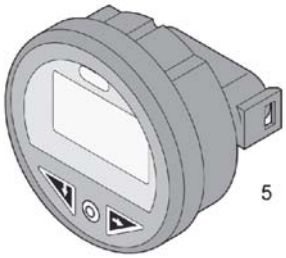
5

6	antenna - low profile antena - perfil bajo
7	antenna base - hole mount antena base - fijación hoyo
8	bracket for antenna base soporte por antena base
9	cable 30ft - TNC F/TNC M cable 30ft - TNC F/TNC M
10	receiver base mount plate placa de fijación receptor base
11	CAN ultra-lite harness haz de cables CAN ultra-lite
12	card for display "smartwave tire alert" tarjeta por indicador "smartwave tire alert"

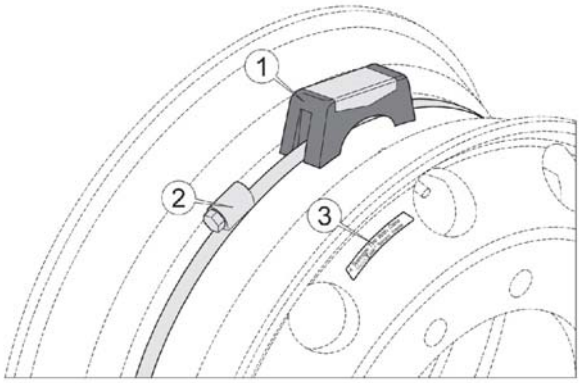

Pos.	Q.	Part n°	Description	Specification
1	#	11140250	Tire pressure sensor	(GE)
2	#	11050718	Screw clamp	
3	#	11050885	Decal	"REMOVE TIRE WITH CARE"
4	1	11050719	Receiver	
5	1	11050720	Display	
6	1	11050721	Aerial	
7	1	11050722	Fastener	
8	1	11050724	Bracket	
9	1	11050723	Wiring harness	l.=30ft
9	1	11248243	Wiring harness	l.=40ft
10	1	11050725	Mounting plate	
11	1	11050726	Wiring harness	
12	1	11050886	Card	"SMARTWAVE TIRE ALERT"

Differential and axle shafts

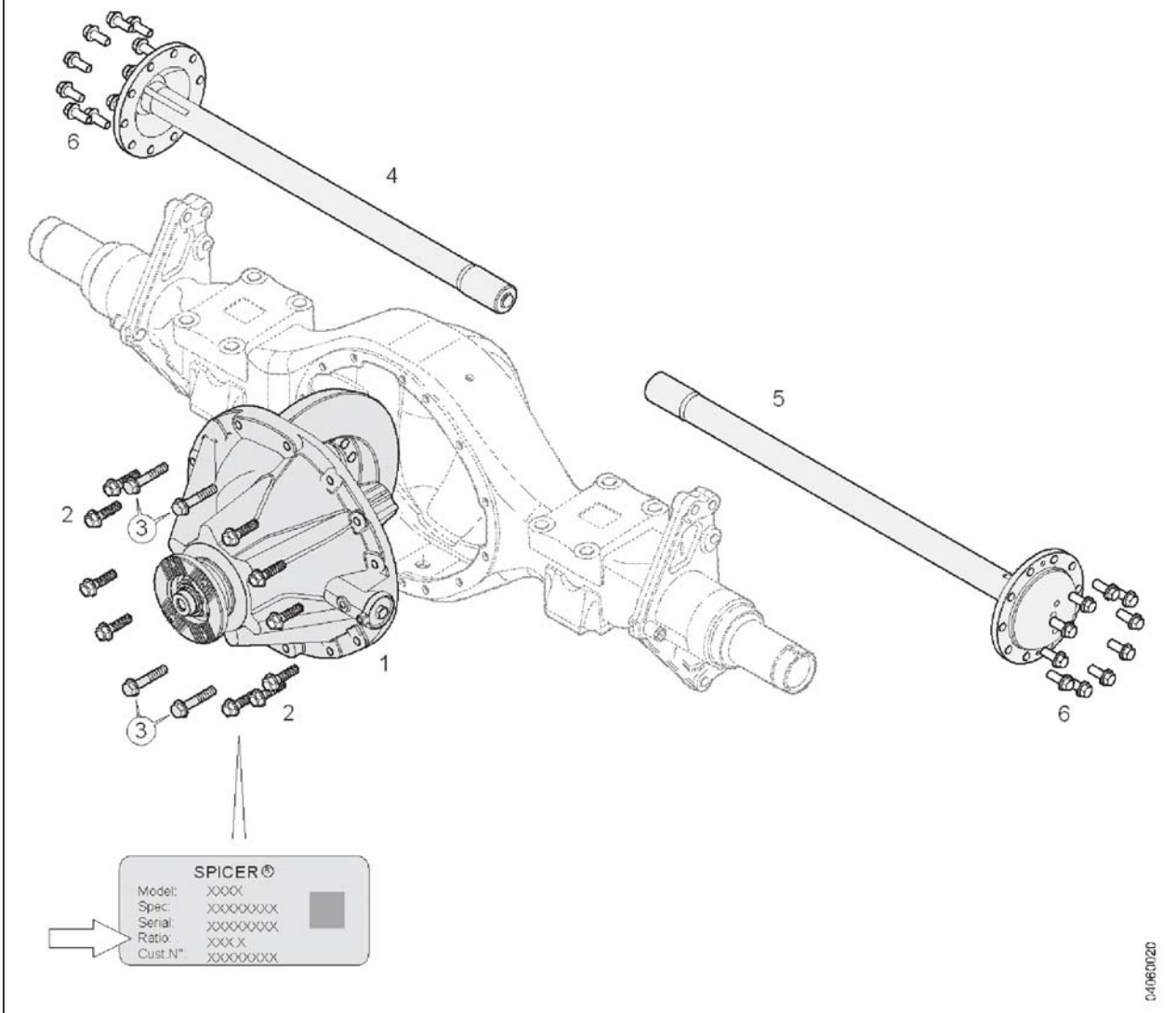

Pos.	Q.	Part n°	Description	Specification
1	1	11047601	Differential	r=3,08
	1	11047606	Differential	r=3,42
	1	11047610	Differential	r=4,10
	1	11047612	Differential	r=4,30
2	10	11047666	Screw	
3	4	11047667	Screw	
4	1	11047670	Axle shaft	
5	1	11047674	Axle shaft	
6	20	10705043	Screw	M16x2x40

Propeller shaft

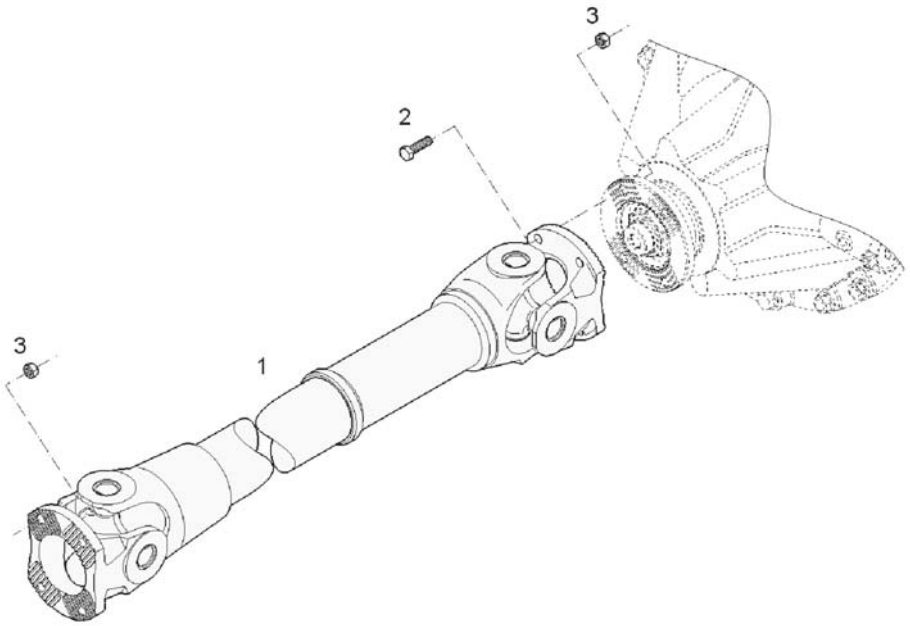

Pos.	Q.	Part n°	Description	Specification
1	1	10659173	Propeller shaft	Lz=1230mm
2	4	660219833	Screw	DIN 961 M14x1,50x50 k.=10.9
3	8	660207211	Lock nut	DIN 980 M14x1,5 k.=10

Propeller shaft: safeguard

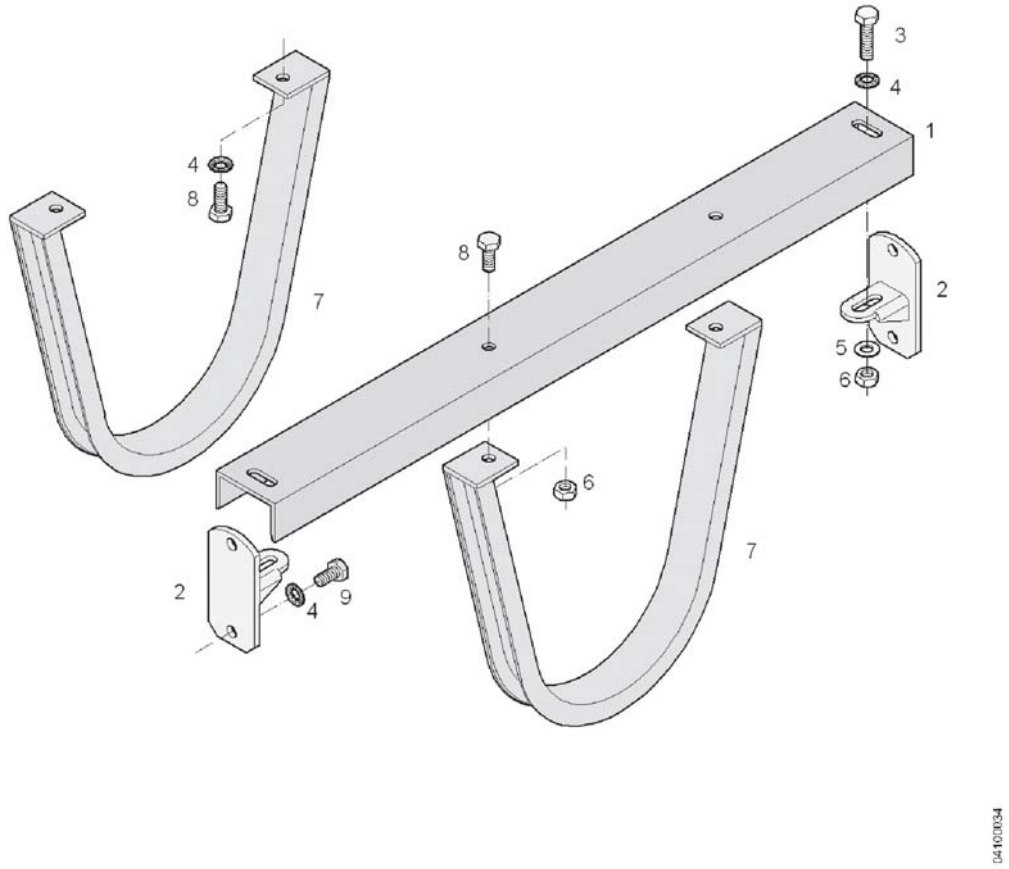

Pos.	Q.	Part n°	Description	Specification
1	1	10686549	Bracket	
2	2	10720184	Bracket	
3	2	660224503	Screw	DIN 933 M10x1,5x30 k.=8.8
4	8	10528327	Coil spring lock washer	Ø10xØ20,3x1,6
5	2	660627920	Washer	DIN 125 A10
6	4	660207106	Lock nut	DIN 980 M10x1,5 k.=8
7	2	10670746	Clamp	
8	4	660224401	Screw	DIN 933 M10x1,5x25 k.=8.8
9	4	660224301	Screw	DIN 933 M10x1,5x20 k.=8.8

Anti lock brake system (ABS/ESC)

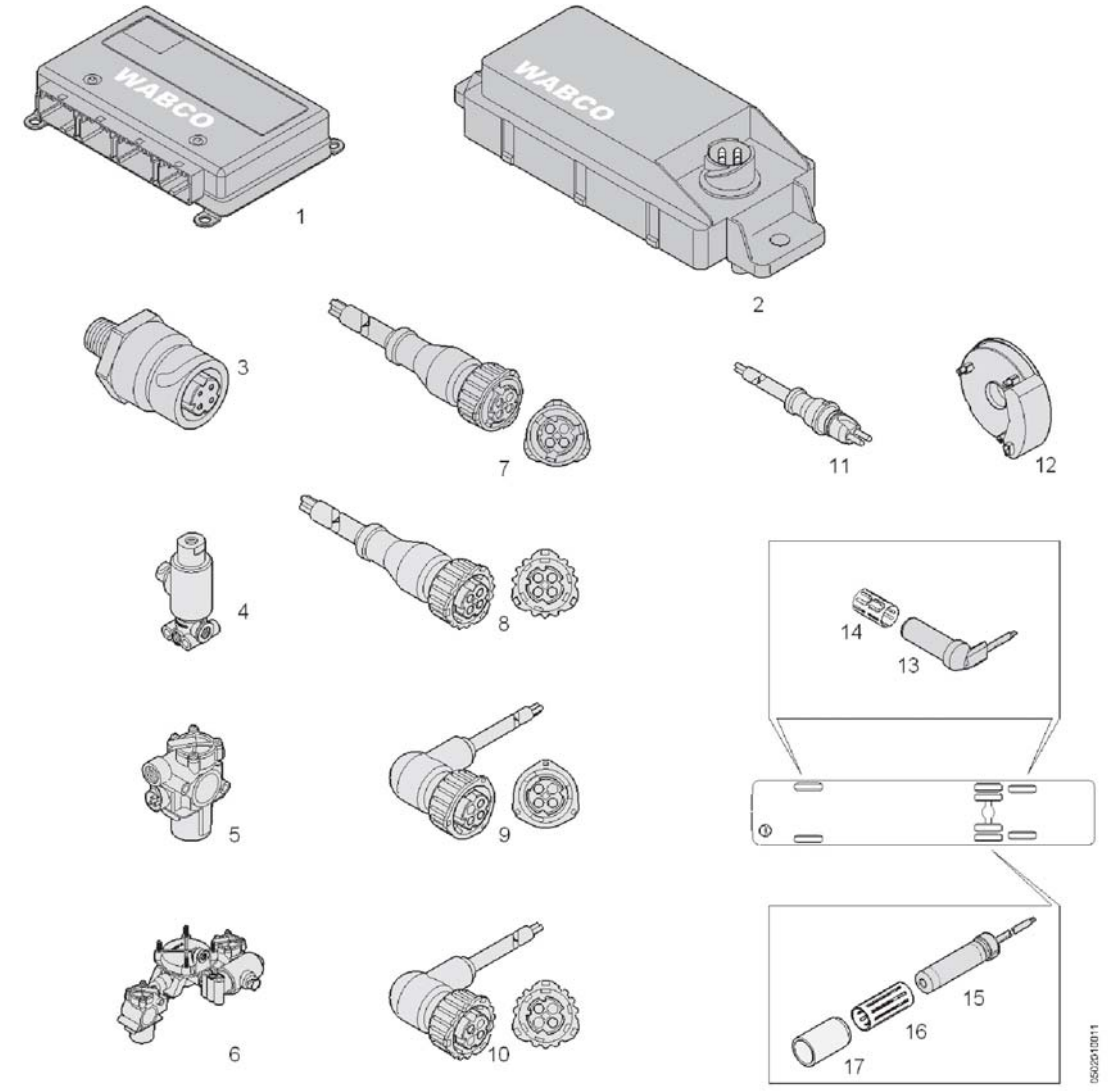

Pos.	Q.	Part n°	Description	Specification
1	1	11179680	Electronic control unit	ABS-E
2	1	11303478	ESC module	
3	1	11167588	Pressure sensor	16 bar
4	1	10876925	Solenoid valve	3/2
5	4	10977101	Pressure modulating valve	ABS
6	1	10977104	Pressure modulating valve	
7	1	11215046	Cable	3P - l.=6m
	1	11215045	Cable	3P - l.=8m
8	1	920924808	Cable	4P - l.=10m
9	2	10674231	Cable	3P - l.=8m ABS
	2	10992632	Cable	3P - l.=9m ABS
	2	10674232	Cable	3P - l.=12m ABS
10	1	10992635	Cable	2P - l.=10m
11	2	10610098	Cable	2P - l.=6,5m
	4	10610099	Cable	2P - l.=12m
12	1	10979392	Sensor	
13	4	10668314	Speed sensor	
14	4	10668337	Sleeve	

Anti lock brake system (ABS/ESC)

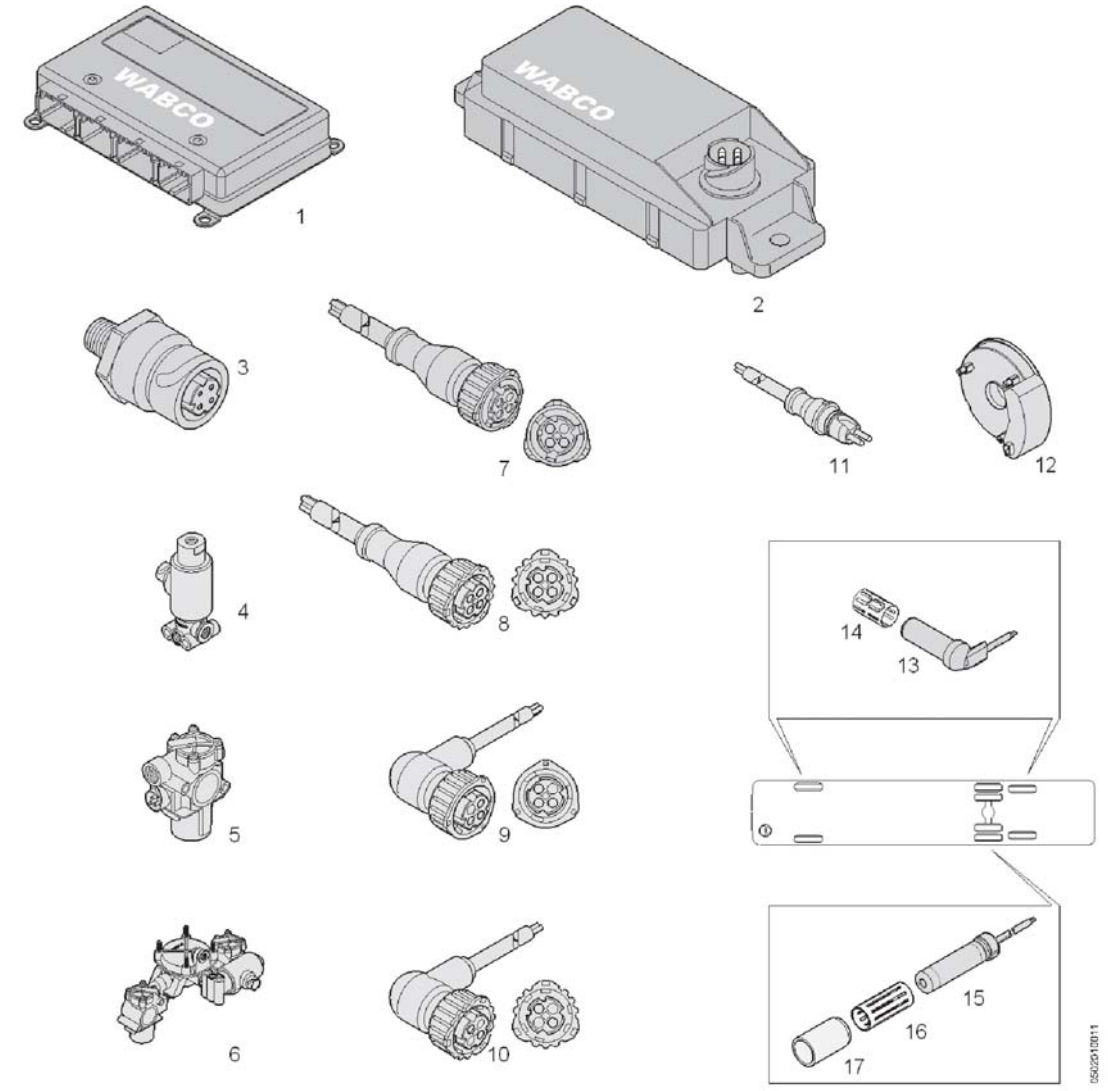

Pos.	Q.	Part n°	Description	Specification
15	2	10853319	Speed sensor	
16	2	10721063	Sleeve	
17	2	11047679	Holder	

Anti lock brake system (G171)

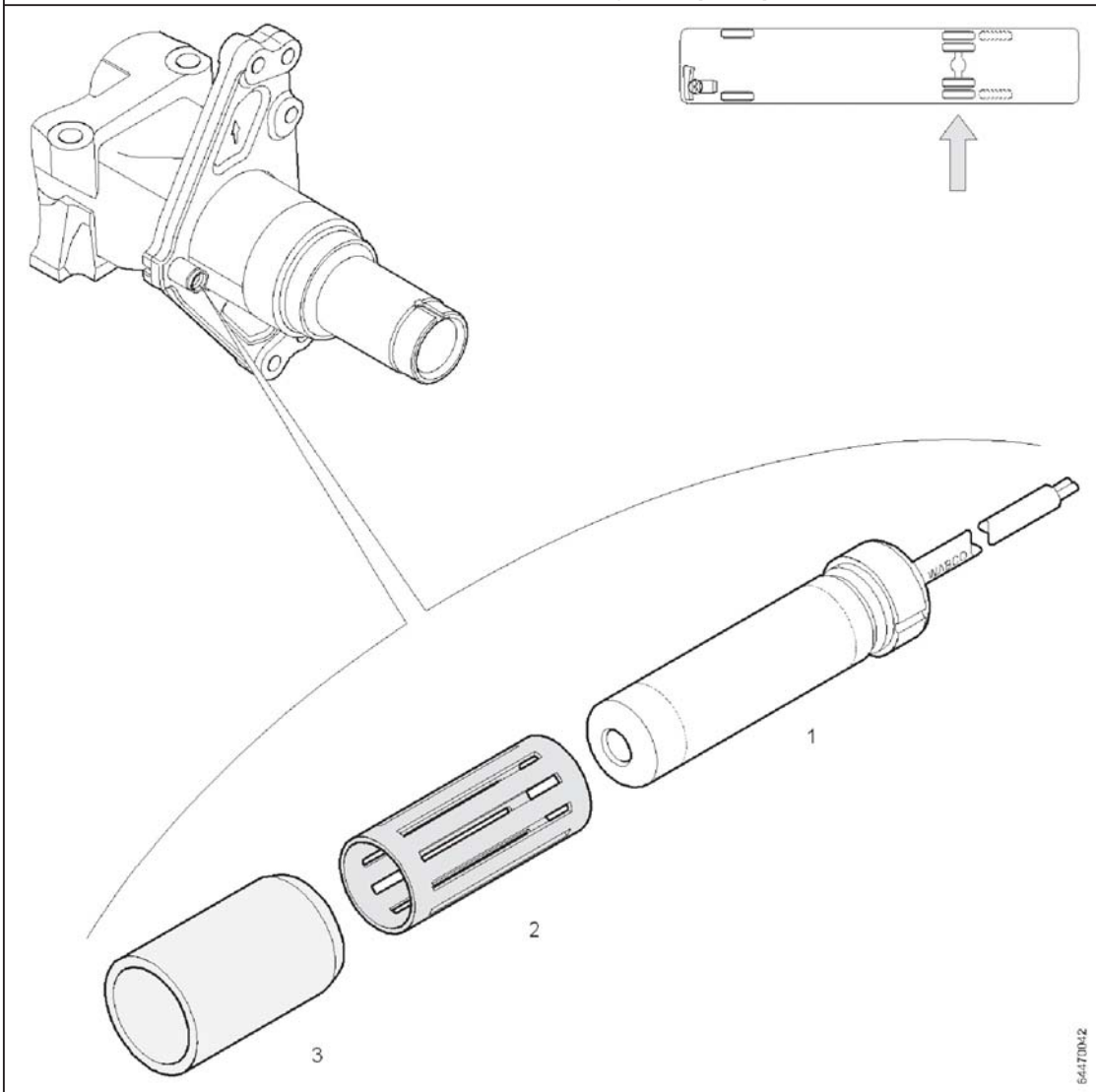

Pos.	Q.	Part n°	Description	Specification
1	2	10853319	Speed sensor	
2	2	10721063	Sleeve	
3	2	11047679	Holder	

Compressed-air system: components

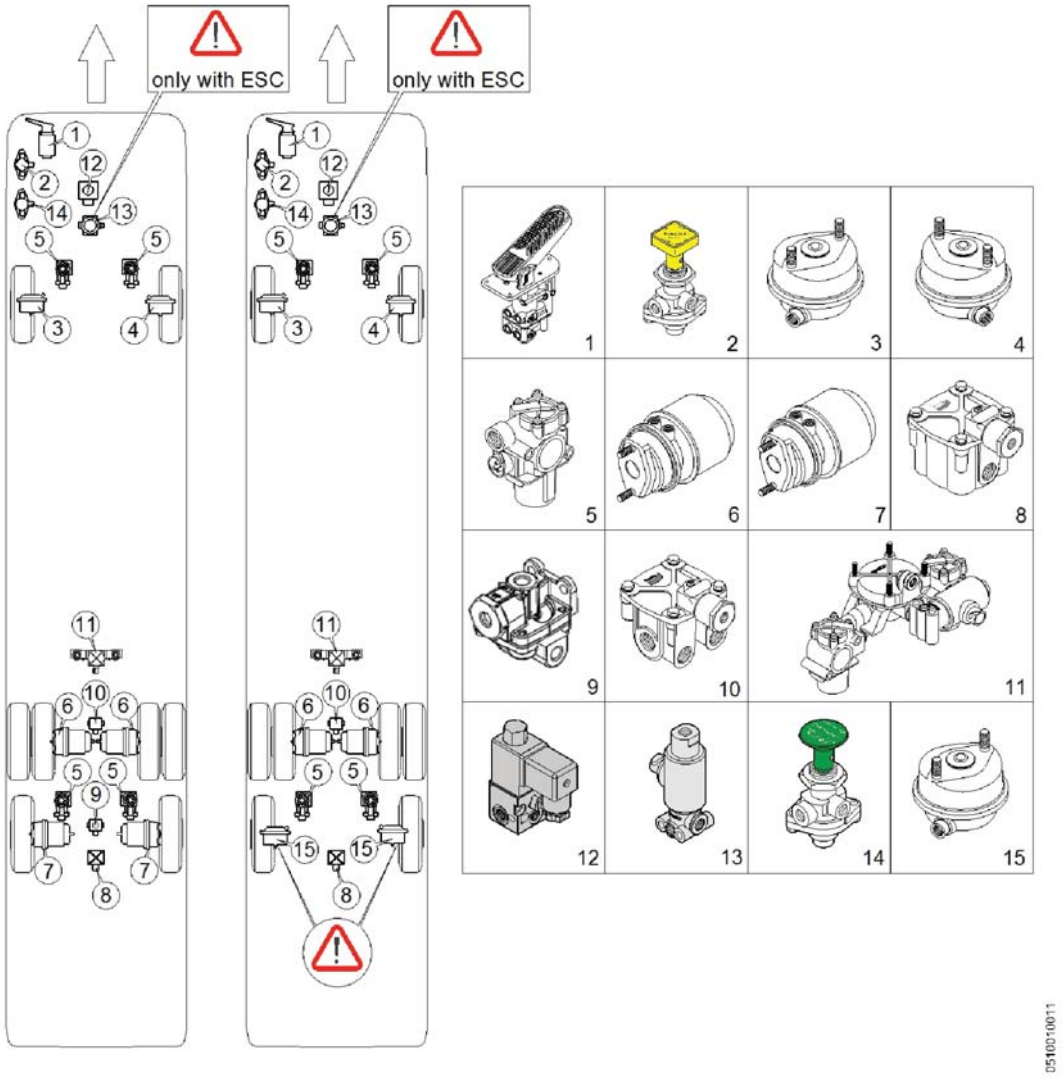

Pos.	Q.	Part n°	Description	Specification
1	1	637211900	Brake pedal	
2	1	637209120	Parking brake valve	
3	1	11004572	Diaphragm actuator	24"
4	1	11004571	Diaphragm actuator	24"
5	4	10977101	Pressure modulating valve	ABS
6	2	11105002	Brake cylinder	24"/24"
7	2	11381348	Brake cylinder	20"/24"
8	1	637209180	Relais valve	
9	1	11203976	Quick release valve	
10	1	11190873	Relais valve	
11	1	10977104	Pressure modulating valve	
12	1	637211940	Solenoid valve	3/2 NG
13	1	10876925	Solenoid valve	3/2
14	1	637209140	Emergency release valve	
15	2	11082704	Diaphragm actuator	20"

Piping

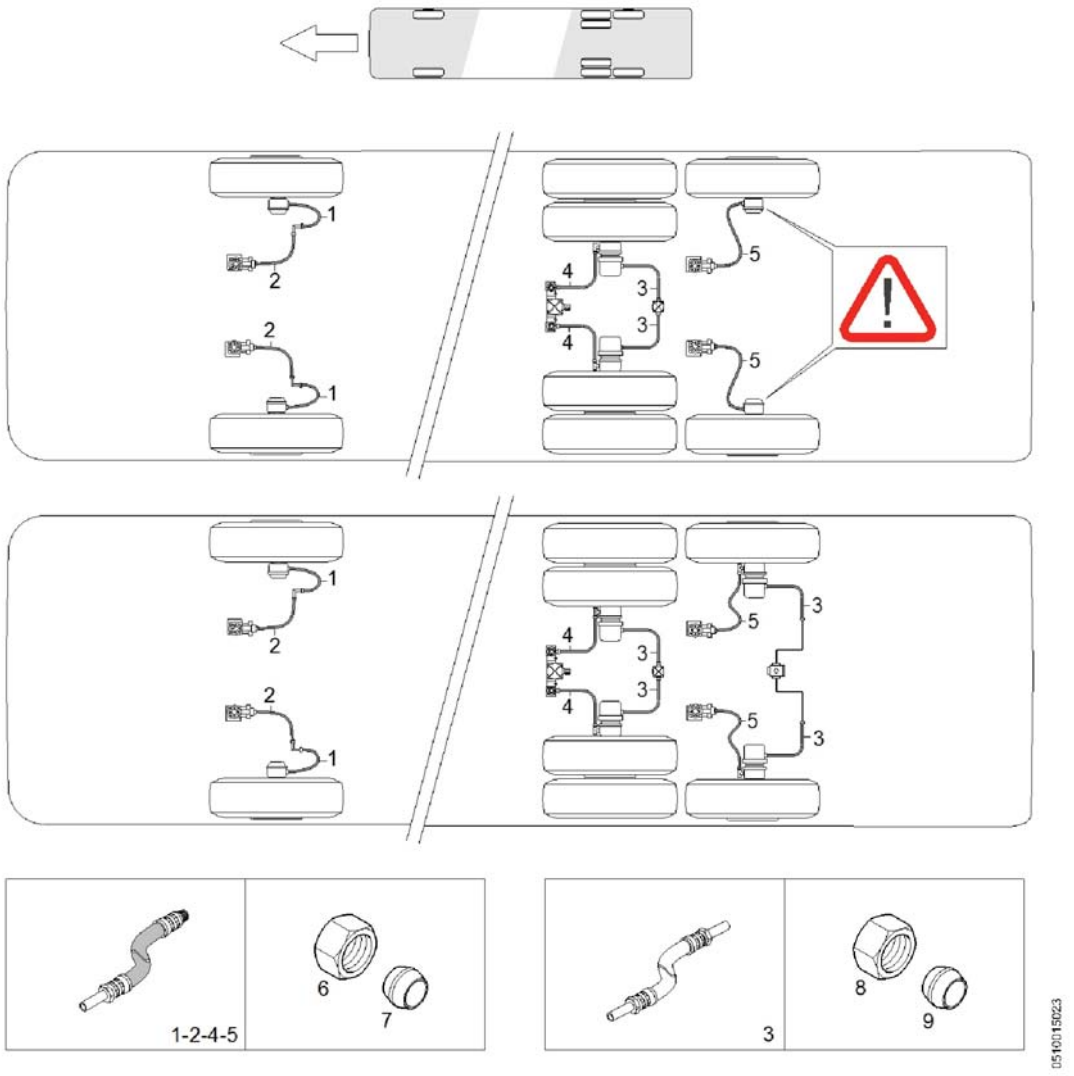

Pos.	Q.	Part n°	Description	Specification
1	2	10734781	Hose	Ø1/2" l.=440mm
2	2	10734780	Hose	Ø1/2" l.=995mm
3	4	10745092	Hose	Ø3/8" l.=620mm
4	2	10758753	Hose	Ø1/2"-3/8" l.=835mm
5	2	10759700	Hose	Ø1/2" l.=645mm
6	#	637318020	Coupling nut	Ø1/2"
7	#	660555508	Cutting ring	Ø1/2"
8	#	637309780	Coupling nut	Ø3/8"
9	#	660555504	Cutting ring	Ø3/8"

Front axle: brake disc

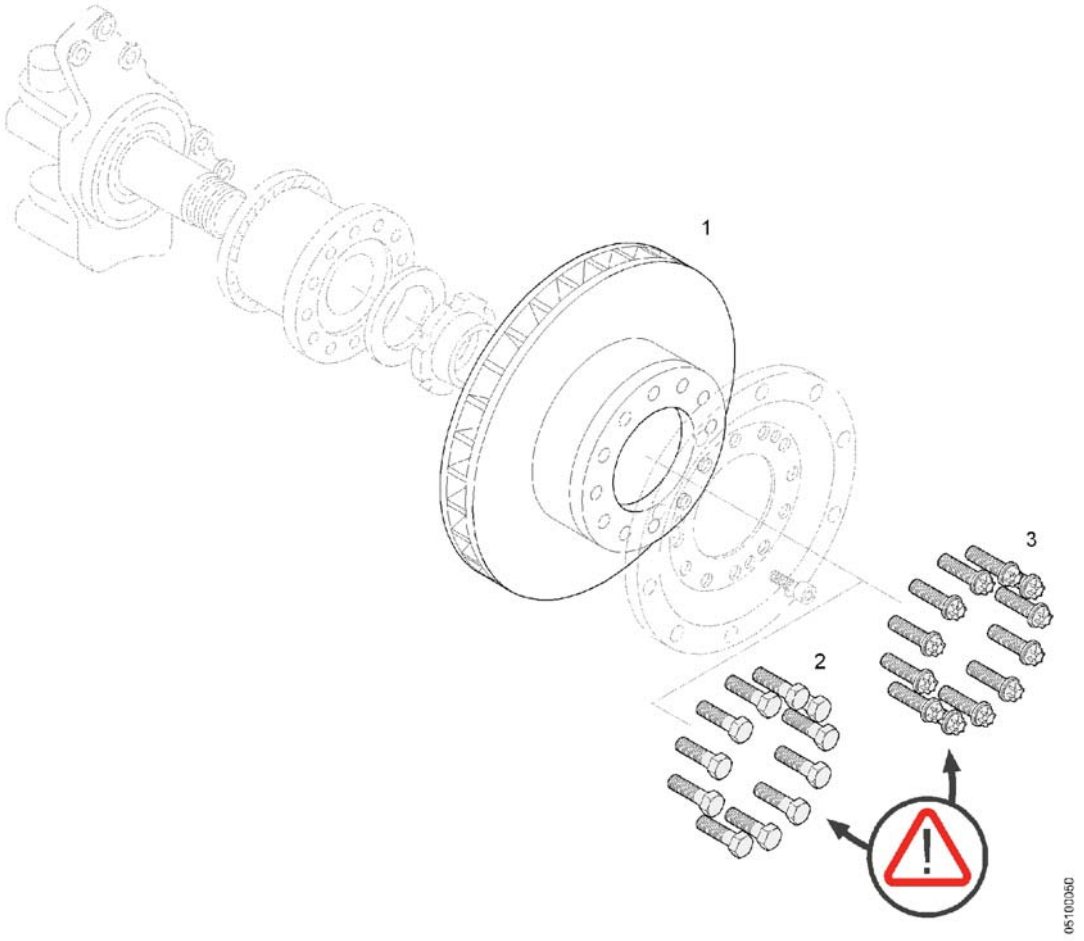

Pos.	Q.	Part n°	Description	Specification
1	1	N508030040	Brake disc	22.5"
2	12	L014944611	Screw	M18x1,5x60 k.=10.9
3	12	L019090013	Screw	DIN 34800 M18x1,5x60 k.=10.9

Front axle: brake caliper + brake pads (CX-TX usa)

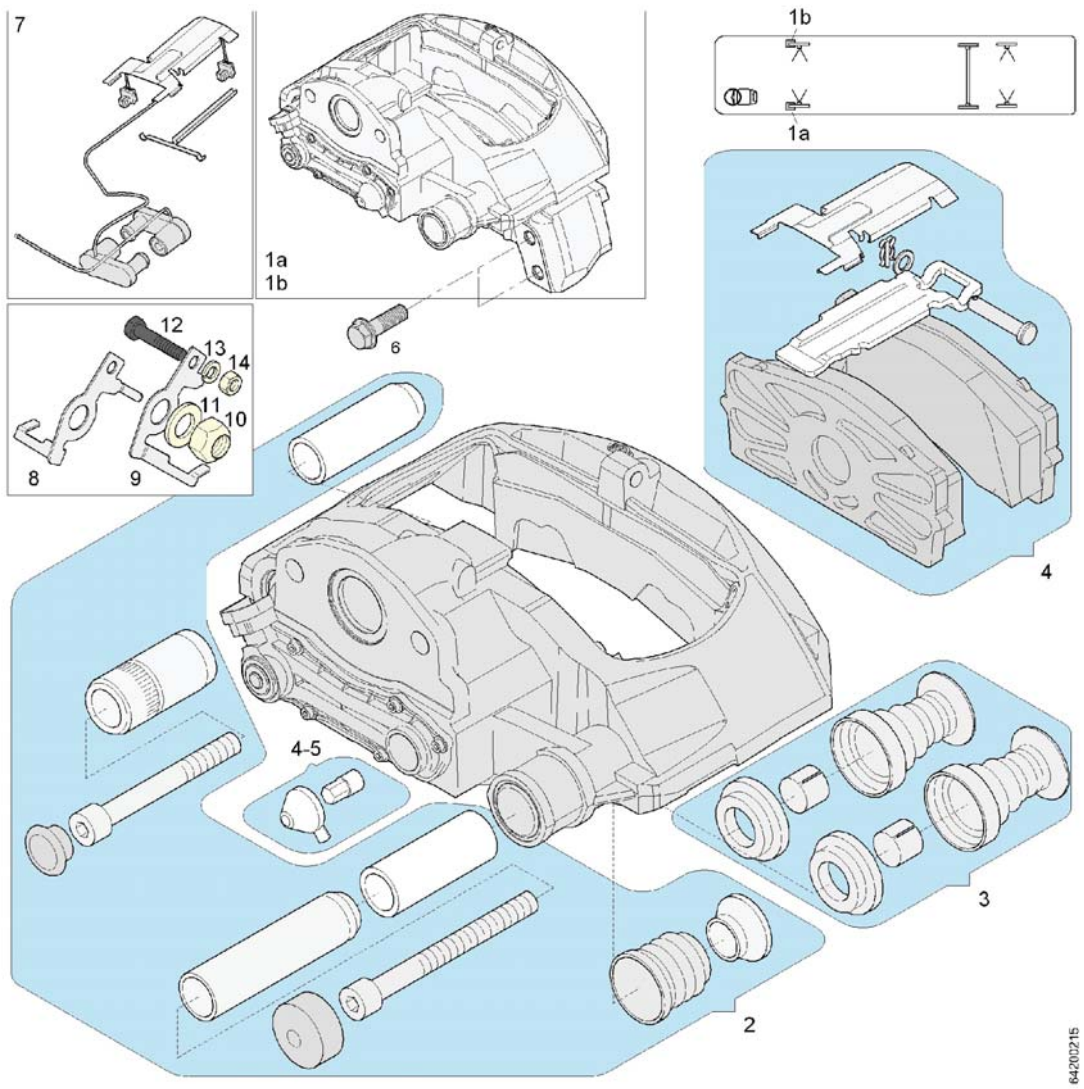

Pos.	Q.	Part n°	Description	Specification
1a	1	N508046598	Brake caliper	
1b	1	N508046597	Brake caliper	
2	*1	N508226037	Repair kit	
3	*1	N508226031	Repair kit	
4	*1	N508206030	Set of brake pads	JURID 539-20
5	*1	N508226024	Repair kit	
6	*12	10721097	Screw	DIN 6921 M18x1,5
7	*1	11144938	Brake wear sensor	
8	1	11163799	Locking plate	
9	1	11163803	Locking plate	
10	#	660207210	Lock nut	DIN 980 M16x1,5 k.=8
11	#	660630327	Washer	DIN 125 Ø17x30x3
12	#	660242501	Screw	DIN 931 M8x1,25x40 k.=8.8
13	#	660636400	Coil spring lock washer	DIN 127 A8
14	#	660203201	Nut	DIN 934 M8x1.25 k.=8

Drive axle: brake disc

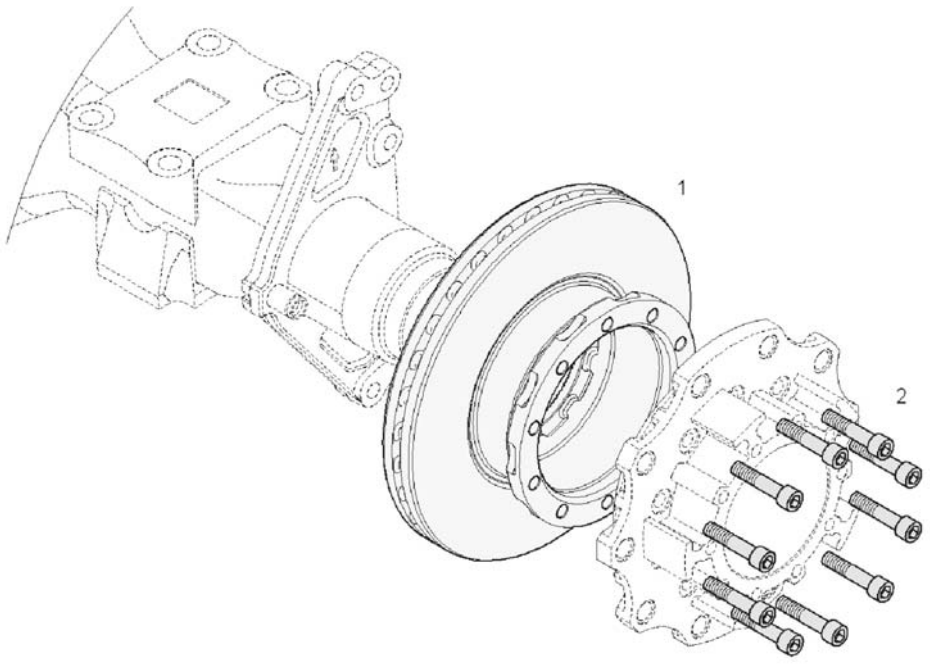

Pos.	Q.	Part n°	Description	Specification
1	2	11047678	Brake disc	
2	20	10721086	Screw	DIN 912 M16x1,5x75

Drive axle: brake caliper + brake pads (CX-TX usa)

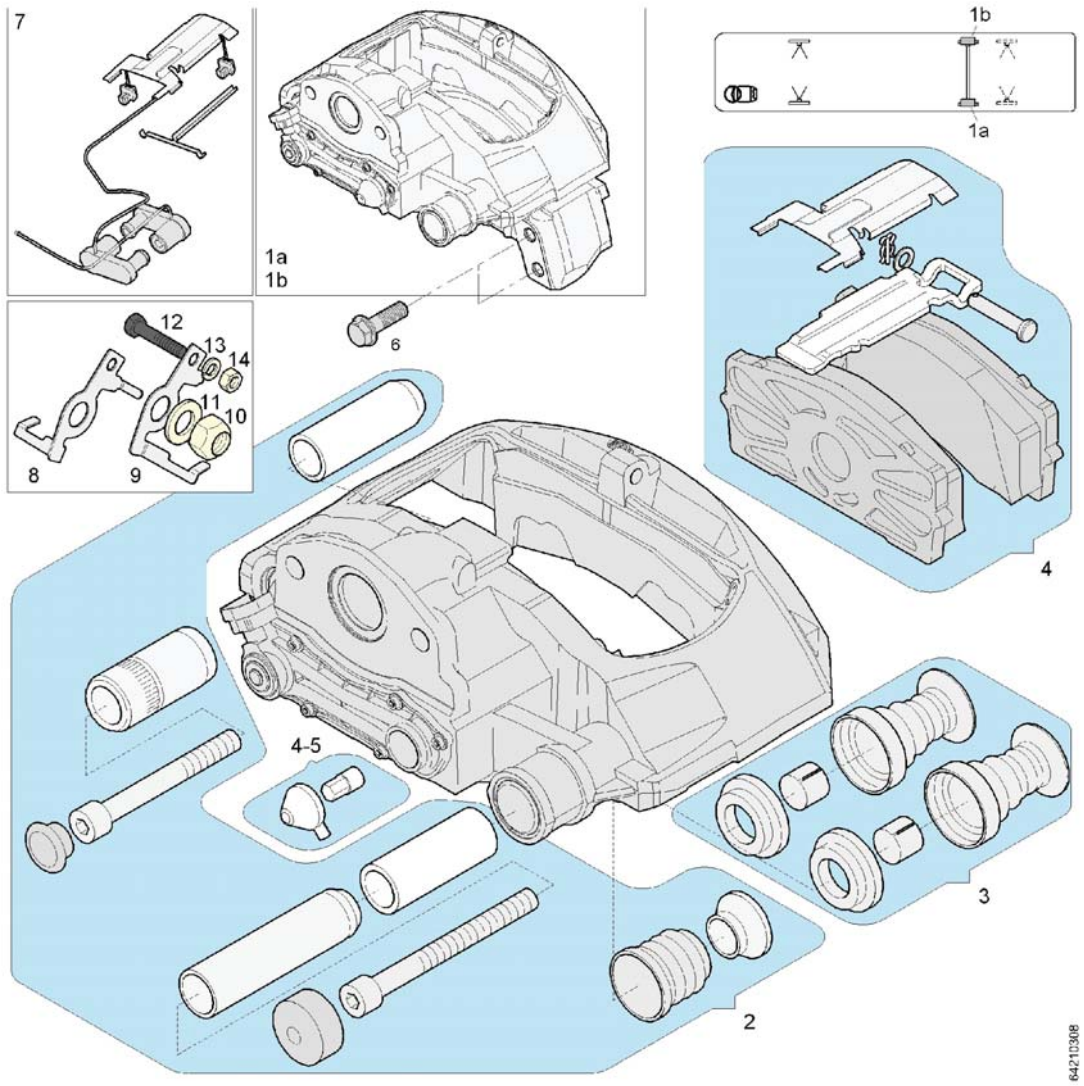

Pos.	Q.	Part n°	Description	Specification
1a	1	N508046598	Brake caliper	
1b	1	N508046597	Brake caliper	
2	*1	N508226037	Repair kit	
3	*1	N508226031	Repair kit	
4	*1	N508206030	Set of brake pads	JURID 539-20
5	*1	N508226024	Repair kit	
6	*12	10721097	Screw	DIN 6921 M18x1,5
7	*1	11144938	Brake wear sensor	
8	1	11163799	Locking plate	
9	1	11163803	Locking plate	
10	#	660207210	Lock nut	DIN 980 M16x1,5 k.=8
11	#	660630327	Washer	DIN 125 Ø17x30x3
12	#	660242501	Screw	DIN 931 M8x1,25x40 k.=8.8
13	#	660636400	Coil spring lock washer	DIN 127 A8
14	#	660203201	Nut	DIN 934 M8x1.25 k.=8

Trailing axle: brake disc

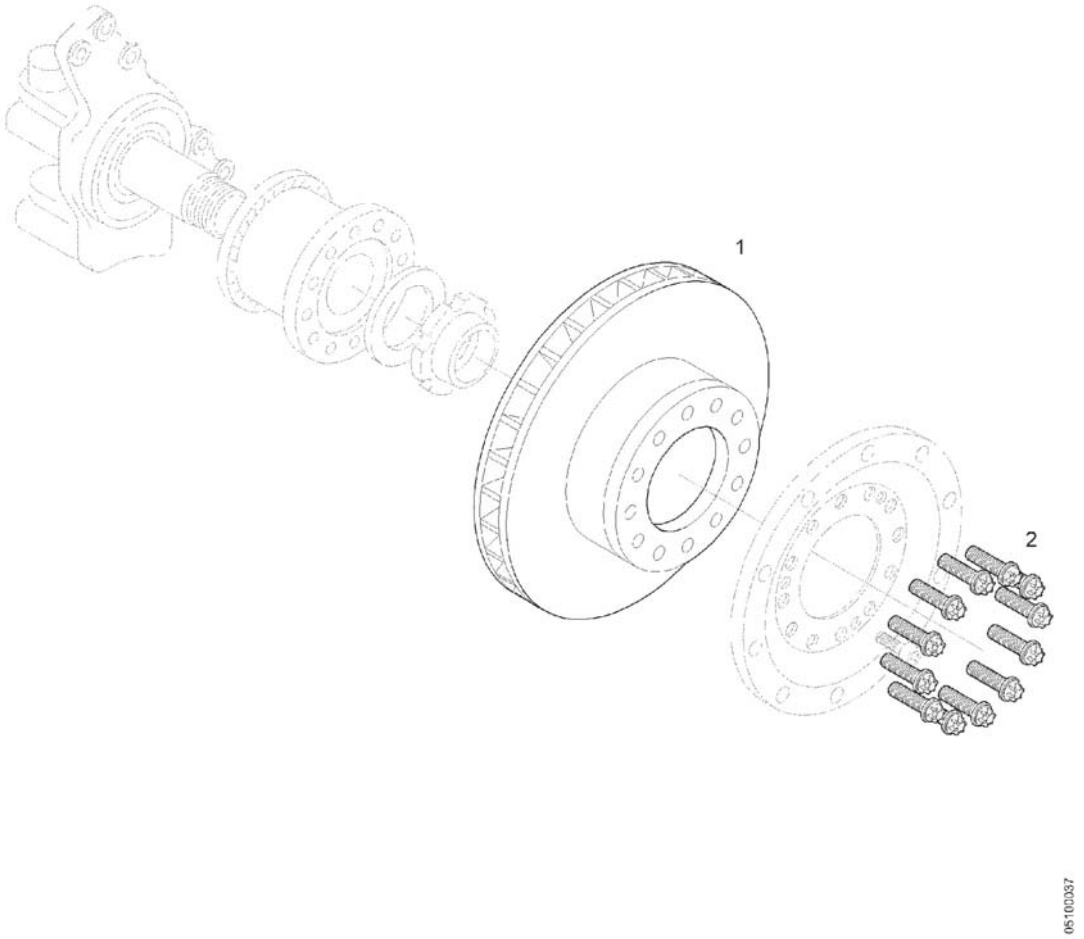

Pos.	Q.	Part n°	Description	Specification
1	1	N508030040	Brake disc	22.5"
2	12	L019090013	Screw	DIN 34800 M18x1,5x60 k.=10.9

Trailing axle: brake caliper + brake pads (CX-TX usa)

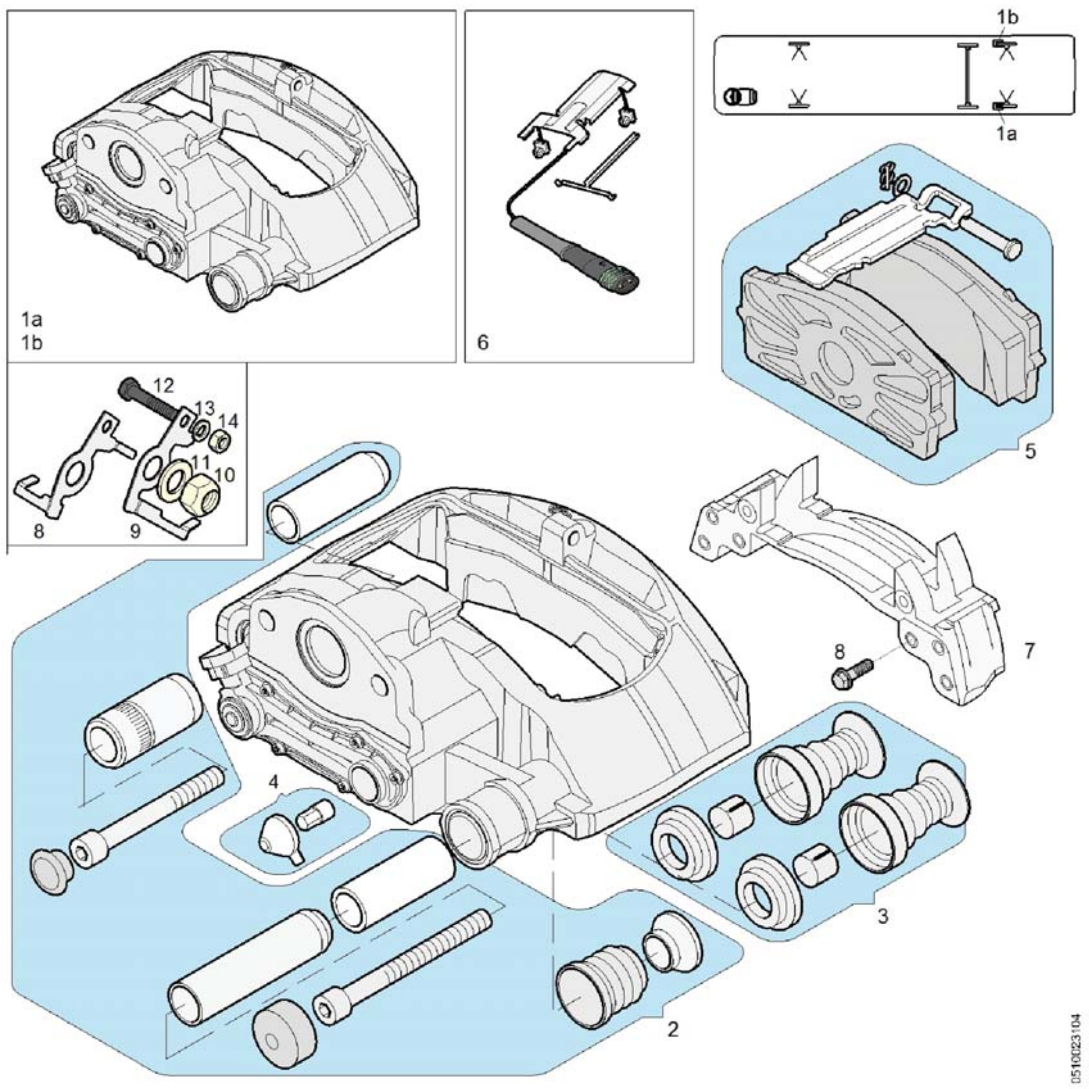

Pos.	Q.	Part n°	Description	Specification
1a	1	11385642	Brake caliper	
1b	1	11385640	Brake caliper	
2	*1	N508226037	Repair kit	
3	*1	11260981	Repair kit	
4	*1	11057545	Repair kit	
5	*1	11373177	Set of brake pads	JURID 539-39
6	*1	11254685	Brake wear sensor	
7	*1	11031119	Brakeholder	
8	*5	L019023413	Screw	M18x1,5x60 k.=10.9
	*1	L017344615	Screw	M18x1,5x50 k.=10.9
9	1	11163799	Locking plate	
10	1	11163803	Locking plate	
11	1	660242501	Screw	DIN 931 M8x1,25x40 k.=8.8
12	1	660636400	Coil spring lock washer	DIN 127 A8
13	1	660203201	Nut	DIN 934 M8x1.25 k.=8
14	2	660207210	Lock nut	DIN 980 M16x1,5 k.=8
15	2	660630992	Washer	DIN 125 M16 (17x30x3)

Clutch

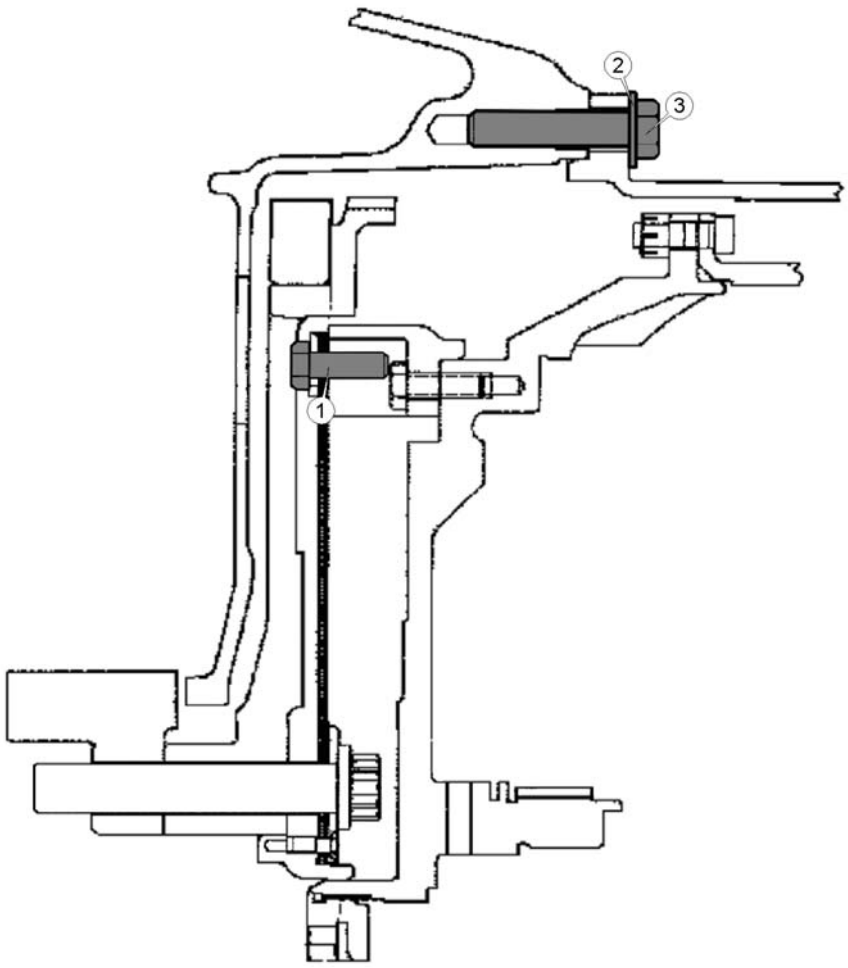

Pos.	Q.	Part n°	Description	Specification
1	12	10533298	Screw	M8x20mm GM
2	12	10870349	Washer	Ø22x2mm
3	12	11201924	Screw	DIN 931 7/16" x 50mm UNC

Automatic transmission

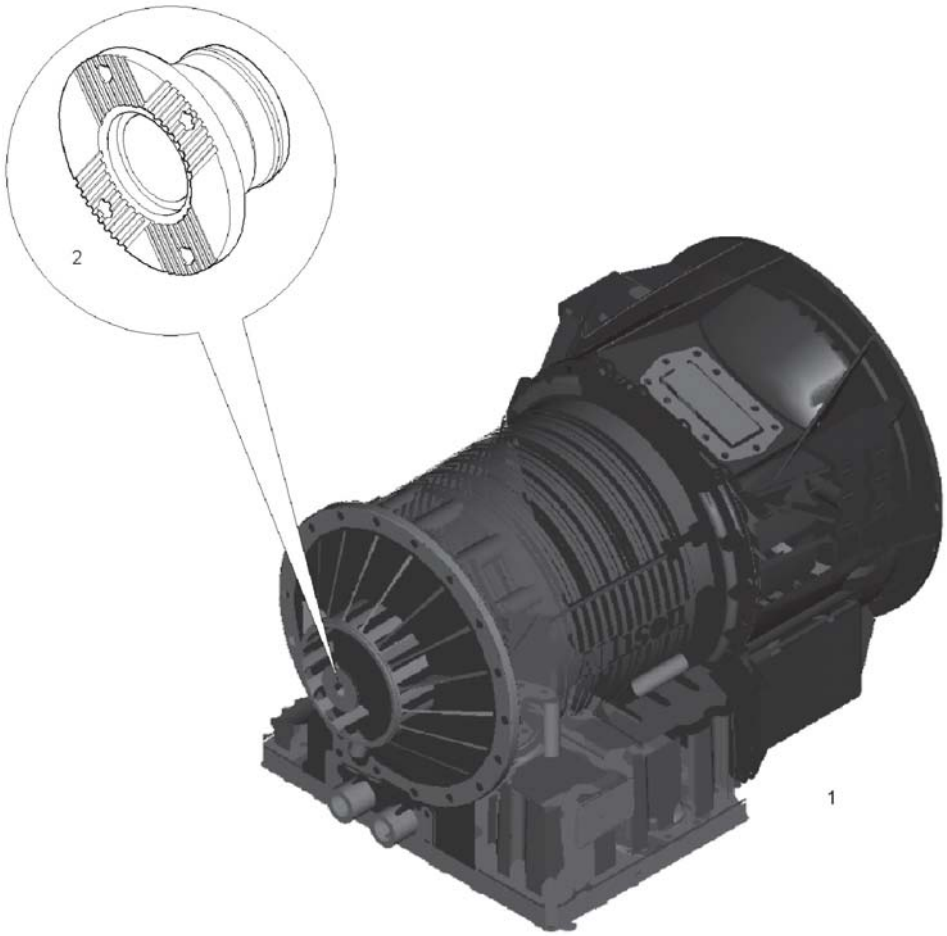

Pos.	Q.	Part n°	Description	Specification
1	1	11194384	Automatic transmission	Allison B500R 2009
2	1	10521005	Flange	

Gearbox: control

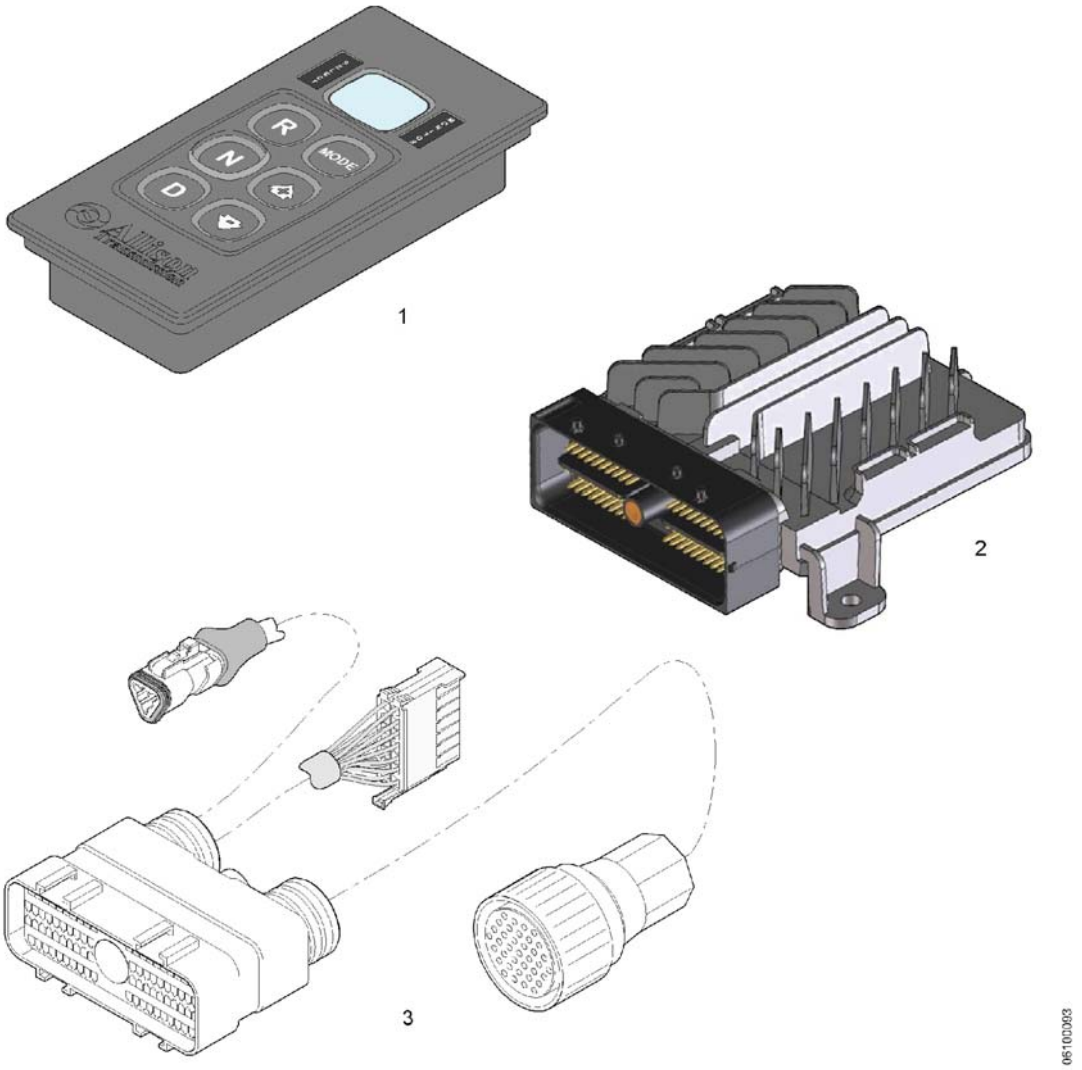

Pos.	Q.	Part n°	Description	Specification
1	1	11344771	Push button switch unit	
2	1	11323111	Electronic control unit	TCM 24V ECU A69
3	1	10989745	Wiring harness	l.=11200mm

Gearbox: suspension

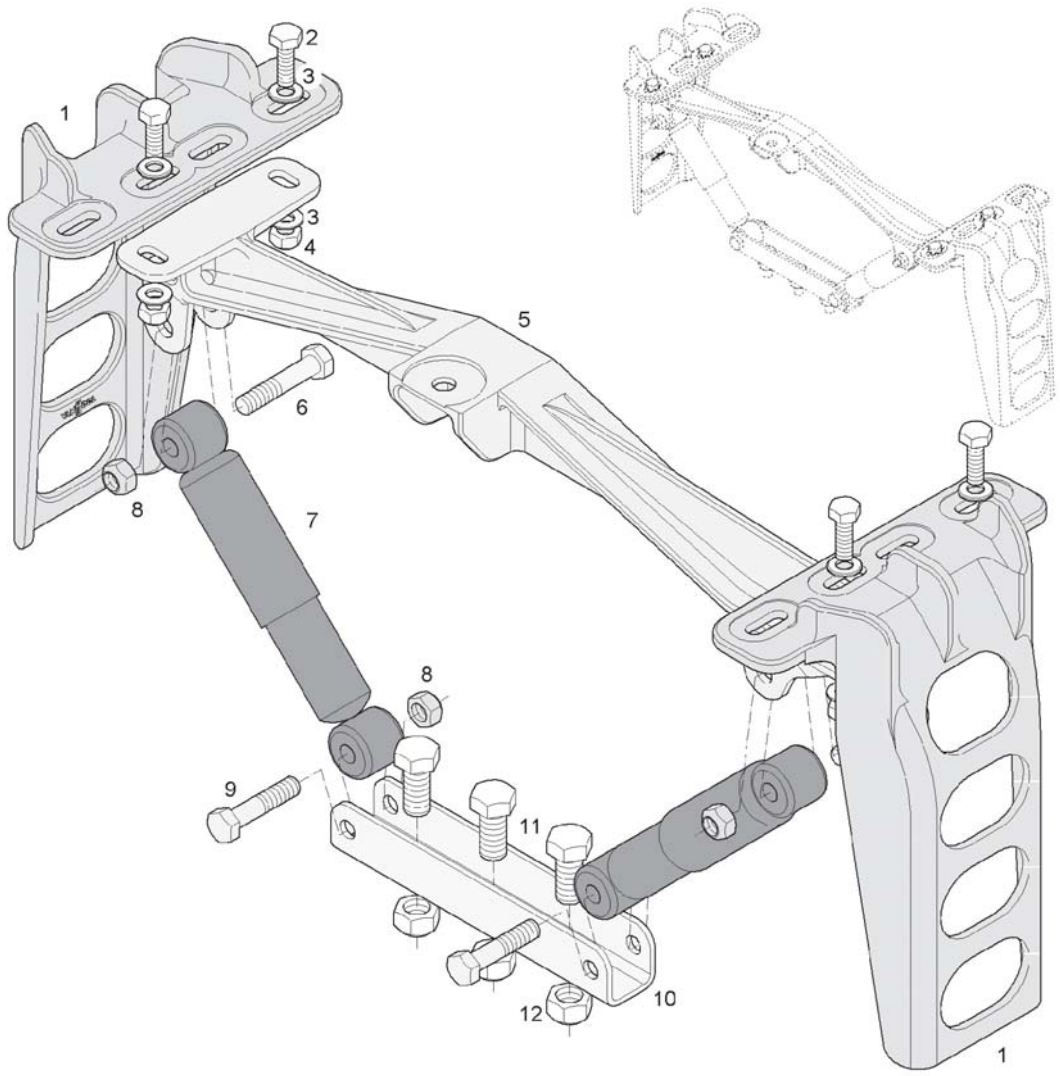

Pos.	Q.	Part n°	Description	Specification
1	2	10602266	Bracket	
2	4	660224503	Screw	DIN 933 M10x1,5x30 k.=8.8
3	8	660627920	Washer	DIN 125 A10
4	4	660207106	Lock nut	DIN 980 M10x1,5 k.=8
5	1	11094030	Crossmember	
6	2	660246201	Screw	DIN 931 M12x1,75x60 k.=8.8
7	2	624313730	Shock absorber	
8	4	660207406	Lock nut	DIN 980 M12x1,75 k.=8
9	2	660246101	Screw	DIN 931M12x1.75x55 K=8.8
10	1	10522626	Bracket	
11	3	660228601	Screw	DIN 933 M16x2x40 k.=8.8
12	3	660207207	Lock nut	DIN 980 M16x2 k.=8

Gearbox: accessories

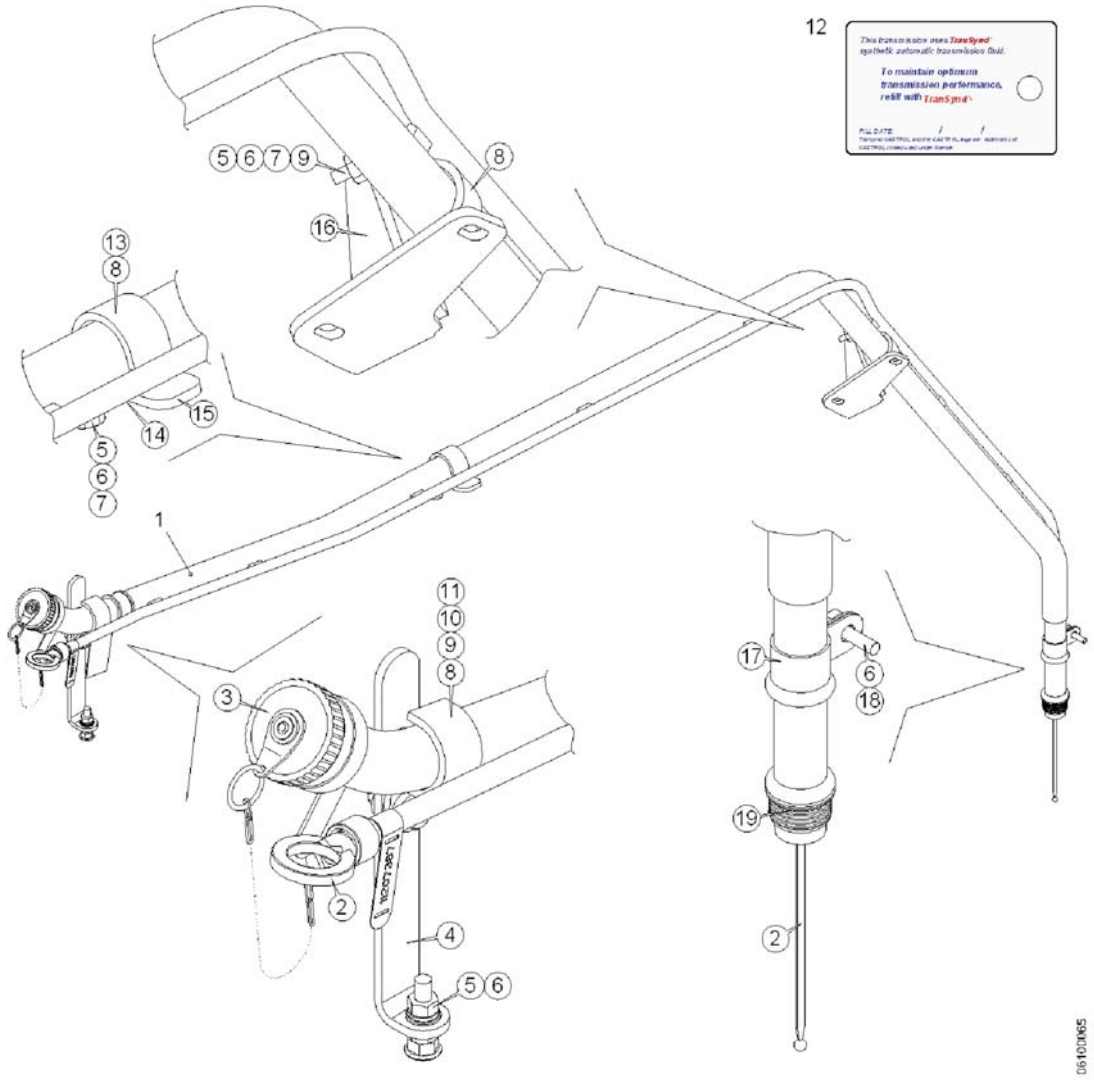

Pos.	Q.	Part n°	Description	Specification
1	1	11207387	Filler pipe	
2	1	11207261	Dip stick	
3	1	10844966	Filler cap	
4	1	11229319	Bracket	
5	4	660209904	Nut	DIN 934 M8x1,25 MAT:IN
6	4	11354417	Washer	M8 MAT:IN
7	2	660625806	Washer	DIN 125 A8,4 MAT:IN
8	3	637100690	Line clip	DIN 1596 Ø33 MAT: ST
9	2	660229806	Screw	DIN 933 M8x30 MAT:IN
10	2	660625812	Washer	DIN 7349 A8,4x21x4
11	1	660209930	Nut	DIN 980 M8 MAT:IN
12	1	10801799	Sign	
13	1	660229807	Screw	DIN 933 M8X35 MAT:IN
14	1	11229317	Spacer	40x30x6mm
15	1	11229318	Bracket	89.5x30x5mm
16	1	11222975	Bracket	
17	1	11147824	Clamp	
18	1	660229804	Screw	DIN 933 M8x1,25x20 MAT:IN

Gearbox: accessories

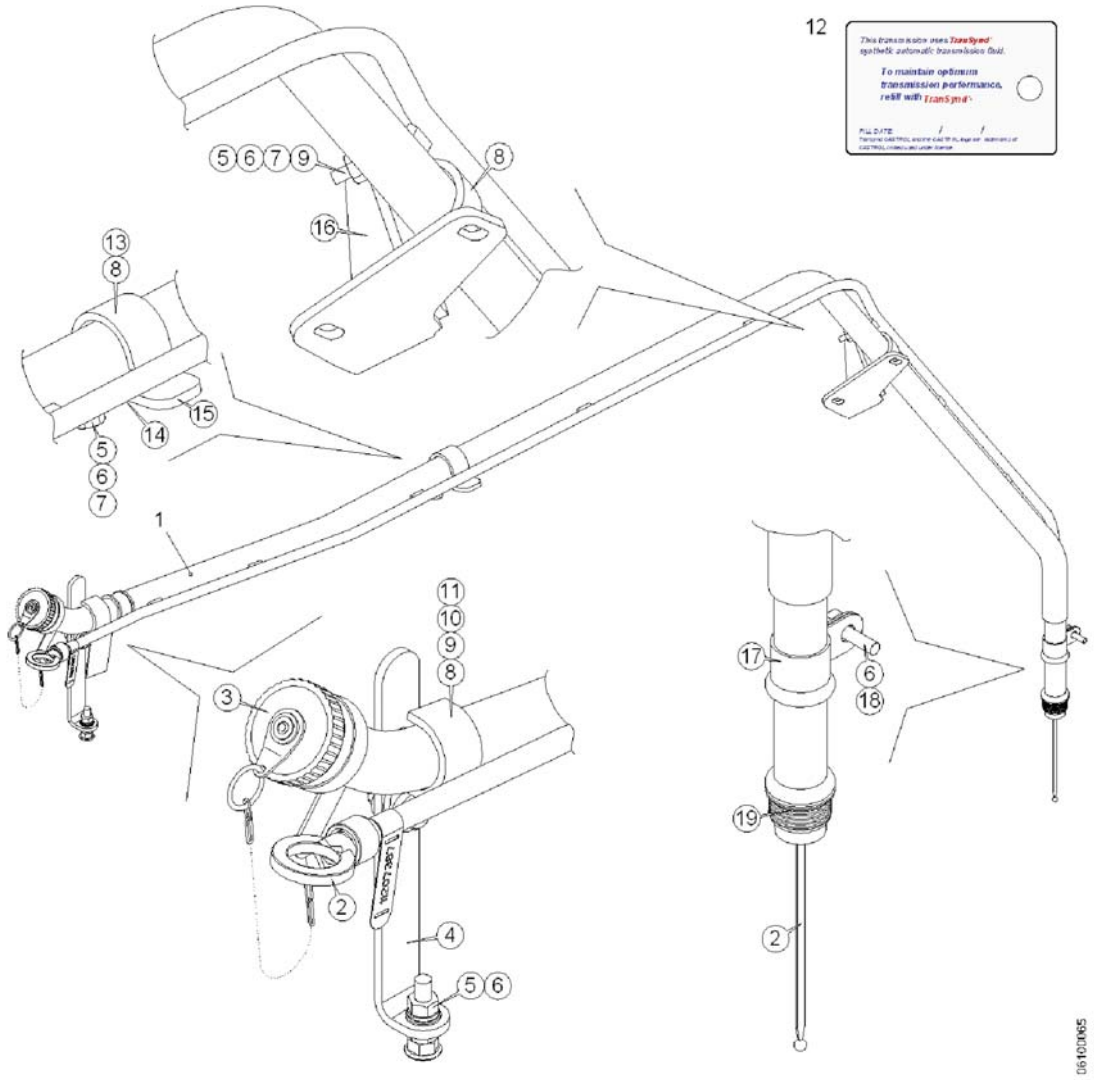

Pos.	Q.	Part n°	Description	Specification
19	1	11147825	Seal	

Hydraulic power system: pump + accessories

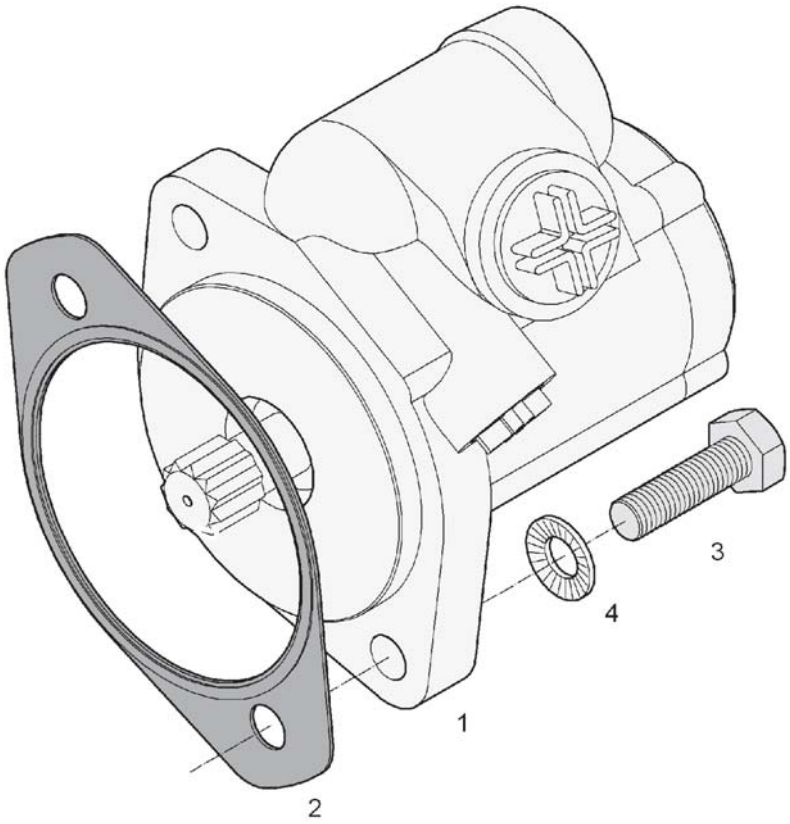

Pos.	Q.	Part n°	Description	Specification
1	1	11194447	Steering pump	18-25,2 l/m
2	1	10614075	Seal	Ø3,28"
3	2	660224601	Screw	DIN 933 M10x1,5x35 k.=8.8
4	2	10528327	Coil spring lock washer	Ø10xØ20,3x1,6

Hydraulic power system: oil tank

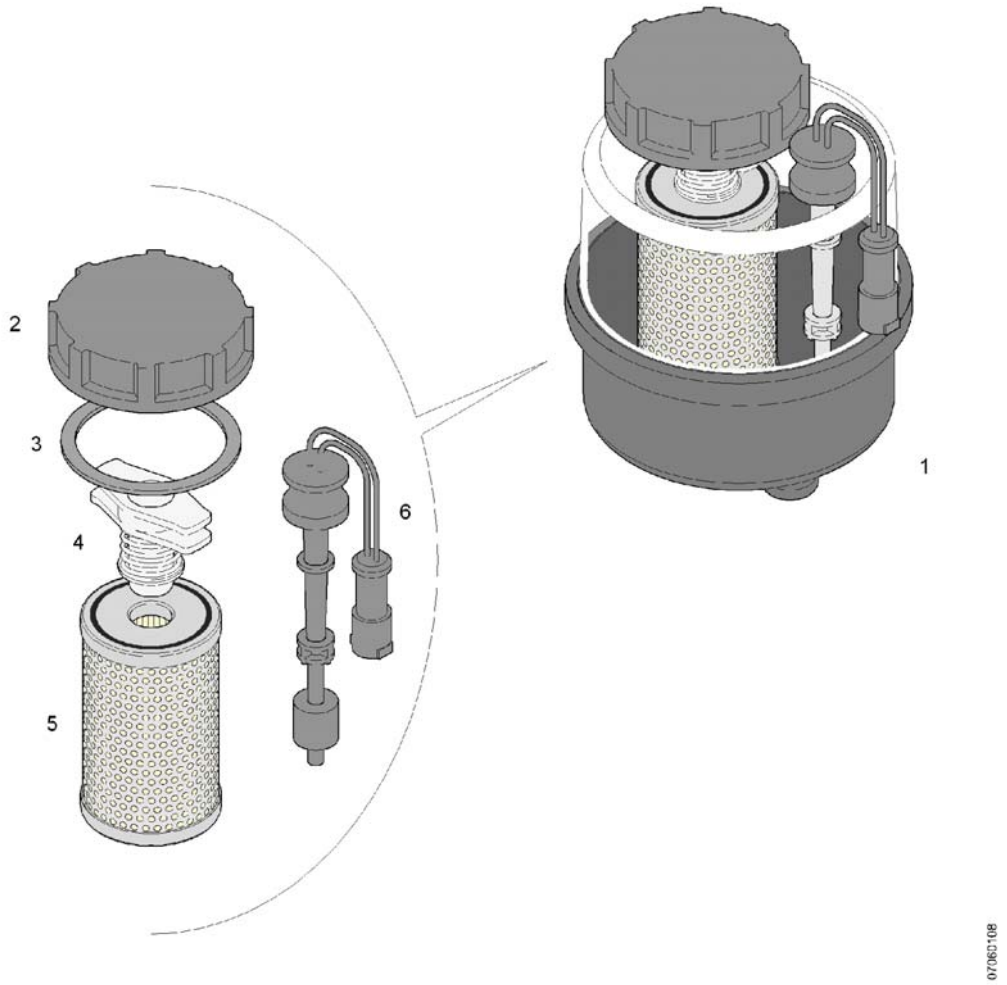

Pos.	Q.	Part n°	Description	Specification
1	1	634205510	Oil tank	
2	*1	Z632002144	Cover	
3	*1	Z770032935	Seal	
4	*1	Z632140102	Locking mechanism	
5	*1	11342159	Filter element	40µ
6	*1	Z632440103	Level sensor	

Hydraulic power system: piping

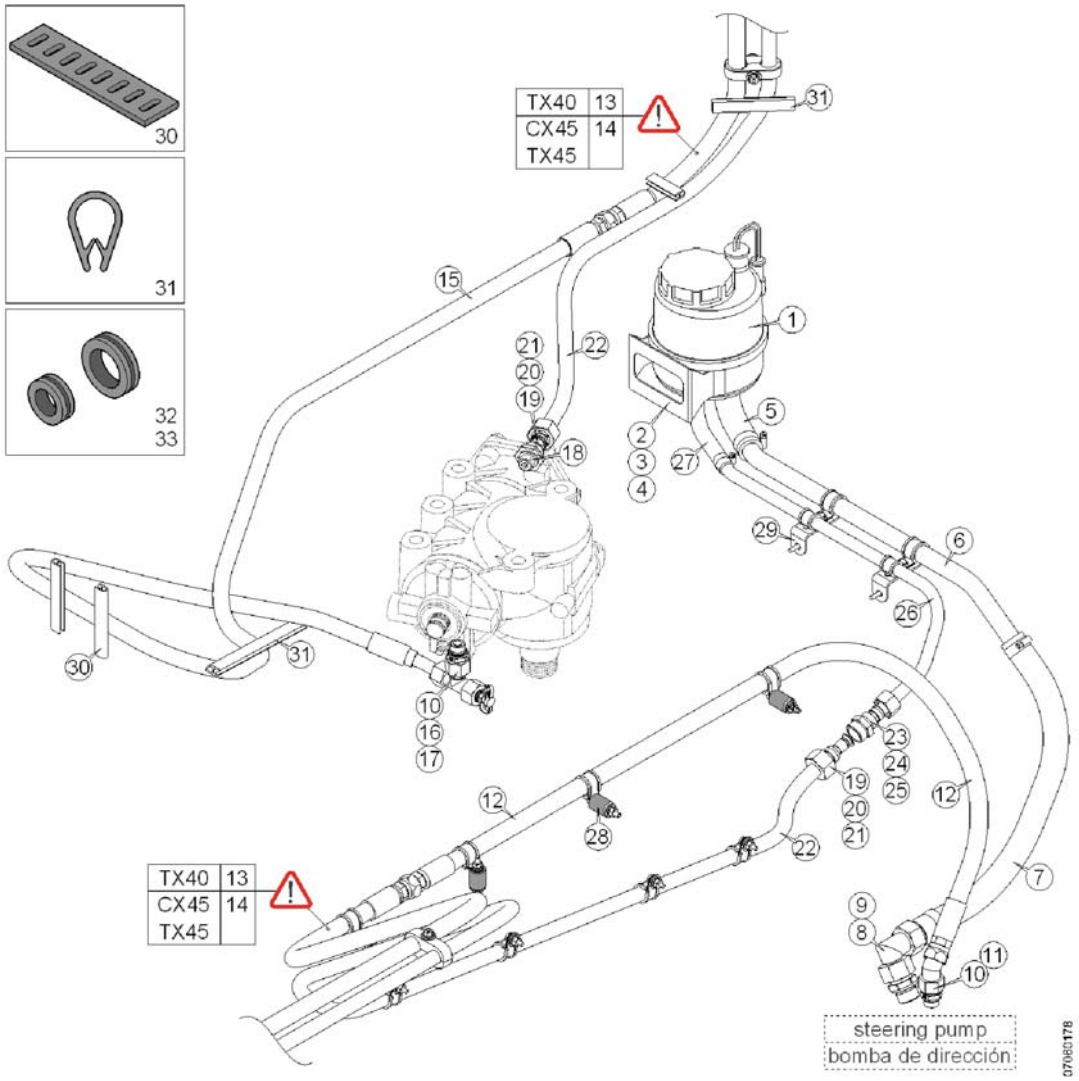

Pos.	Q.	Part n°	Description	Specification
1	1	634205510	Oil tank	
2	1	11350703	Bracket	
3	2	660229755	Screw	DIN 933 M6x1x25mm MAT:IN
4	2	660209935	Lock nut	DIN 980 M6 MAT:IN
5	1	10968257	Elbow	Ø22- 90° MAT:R
6	1	11207877	Pipe	Ø22mm
7	1	624200770	Hose	M30x2 l.=860mm
8	1	637307380	Coupling	90° Ø22
9	1	11336624	Coupling	L22 (M26x1,5)
10	2	11336632	Coupling	L15 (M18x1,5)
11	1	10855964	Coupling	135° -Ø15
12	1	11313114	Hose	1/2" M22x1,5 l.=1200mm
13	1	11386184	Hose	1/2" M22x1,5 l.=9450mm (W)
14	1	11313107	Hose	1/2" M22x1,5 l.=10850mm
15	1	10969655	Hose	M22x1,5 l.=2000mm
16	1	637314820	Coupling	L15(M22x1,5
17	1	637311760	Connecting nipple	L15(M22x1.5-Ø15)(ST)
18	1	10594029	Throttle insert	M18-M26 / Ø4mm

Hydraulic power system: piping

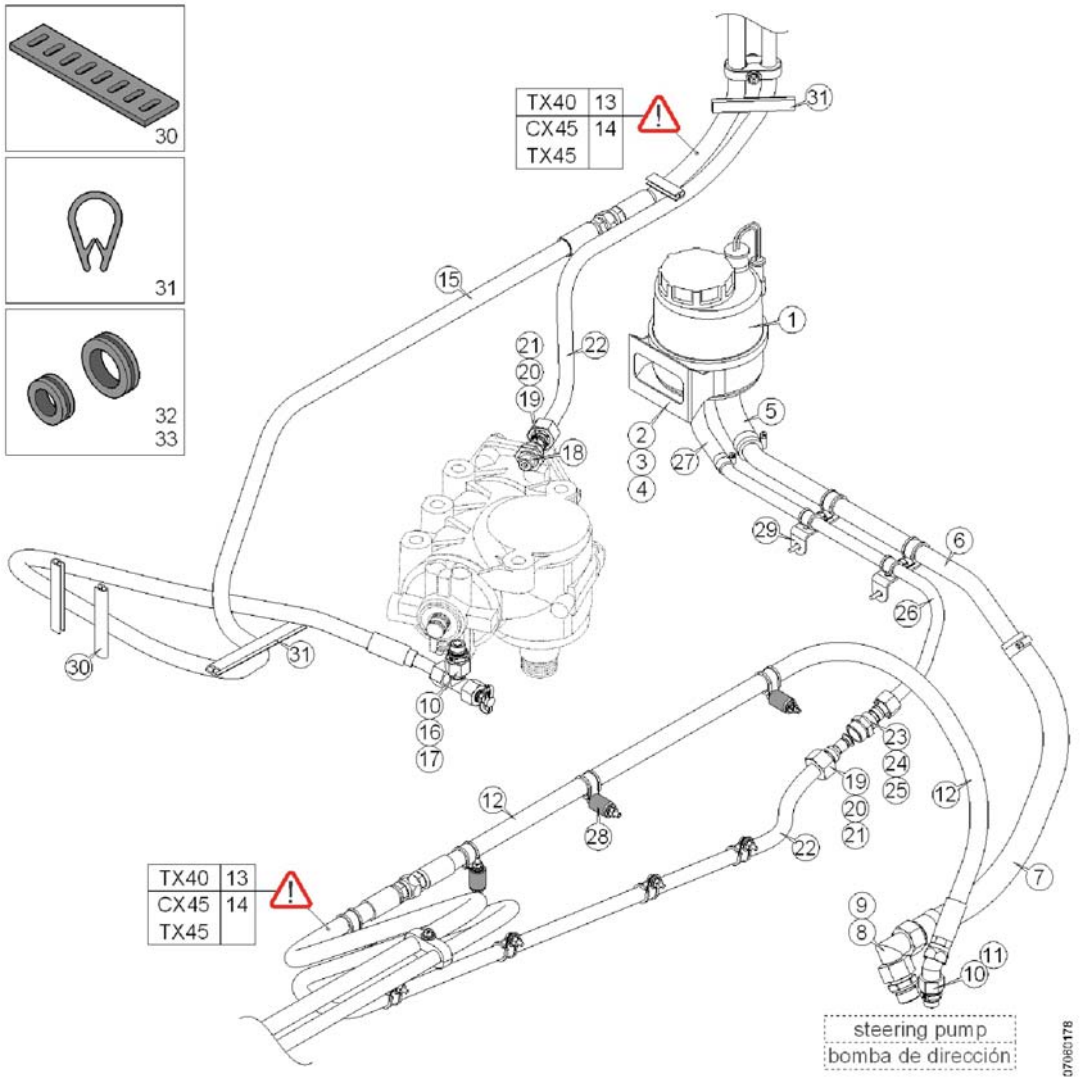

Pos.	Q.	Part n°	Description	Specification
19	2	637309660	Reinforcing ring	Ø18x1,5
20	2	637307100	Clamping ring	Ø18
21	2	637307340	Coupling nut	M26x1,5-Ø18
22	#m	11318583	Hose	Ø18x2 MAT: NYLON (Z)
23	1	637311470	Coupling	Ø15-Ø18
24	1	637302930	Cutting ring	Ø15
25	1	637305260	Coupling nut	M22x1,5-Ø15
26	1	10910596	Pipe	MAT: CU Ø15mm
27	1	10968260	Elbow	Ø15- 90° MAT:R
28	4	632209540	Silentbloc	Ø20x25 / M6x15
29	2	10928693	Bracket	
30	1	11135011	Protection shield	70 Shore A 160x40x6 MAT: R
31	#m	660063809	Rubber section	
32	2	660779105	Grommet	MAT:R Ø25
33	2	660779106	Grommet	MAT:R Ø35

Steering mechanism: steering column

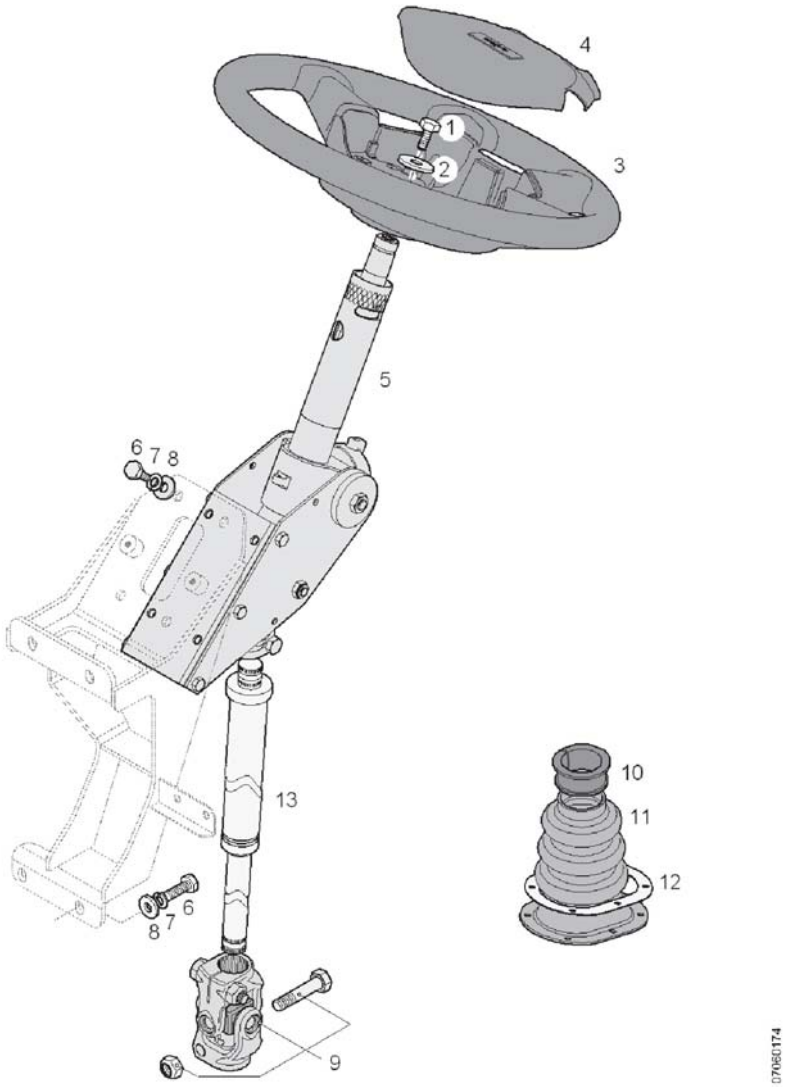

Pos.	Q.	Part n°	Description	Specification
1	1	660226504	Screw	DIN 933 M12x1,75x30 k.=10.9
2	1	10959994	Washer	Ø40xØ13x4
3	1	701801926	Steering wheel	Ø450mm
4	1	11144304	Cover plate	"VAN HOOL"
5	1	11222579	Steering column	
6	8	660224503	Screw	DIN 933 M10x1,5x30 k.=8.8
7	8	660636500	Coil spring lock washer	DIN 127 A10
8	8	660628014	Washer	DIN 7349 A10
9	1	10965973	Articulation	
	*2	Z368030126	Screw	DIN 988 M10x1,25x56 k.=10.9
	*2	10513551	Lock nut	DIN 985 M10x1,25 k.=10
10	1	10645615	Bush	Ø60x26 (Z)
11	1	10541762	Dust cap	
12	1	10541763	Ring	150x100x1,2 (Z)
13	1	11175356	Telescopic steering column	

Steering mechanism: pinion gear

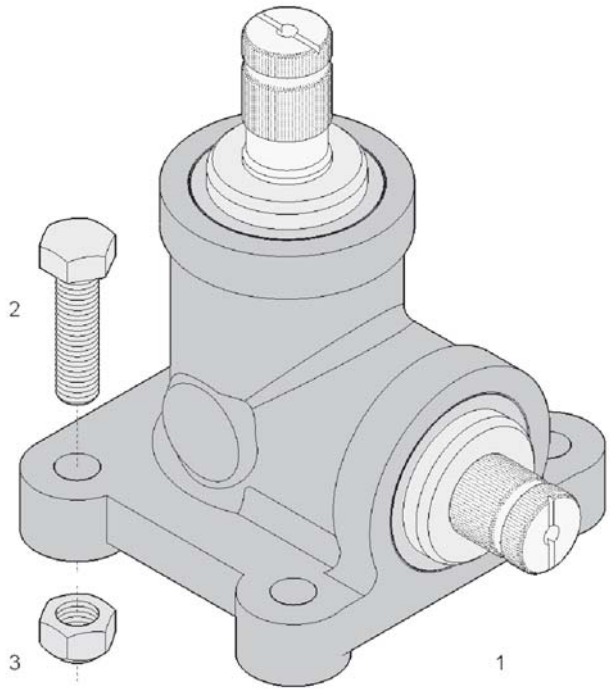

Pos.	Q.	Part n°	Description	Specification
1	1	11153766	Pinion gear	
2	4	660226801	Screw	DIN 933 M12x1,75x45 k.=8.8
3	4	660207406	Lock nut	DIN 980 M12x1,75 k.=8

Steering mechanism: intermediate shaft

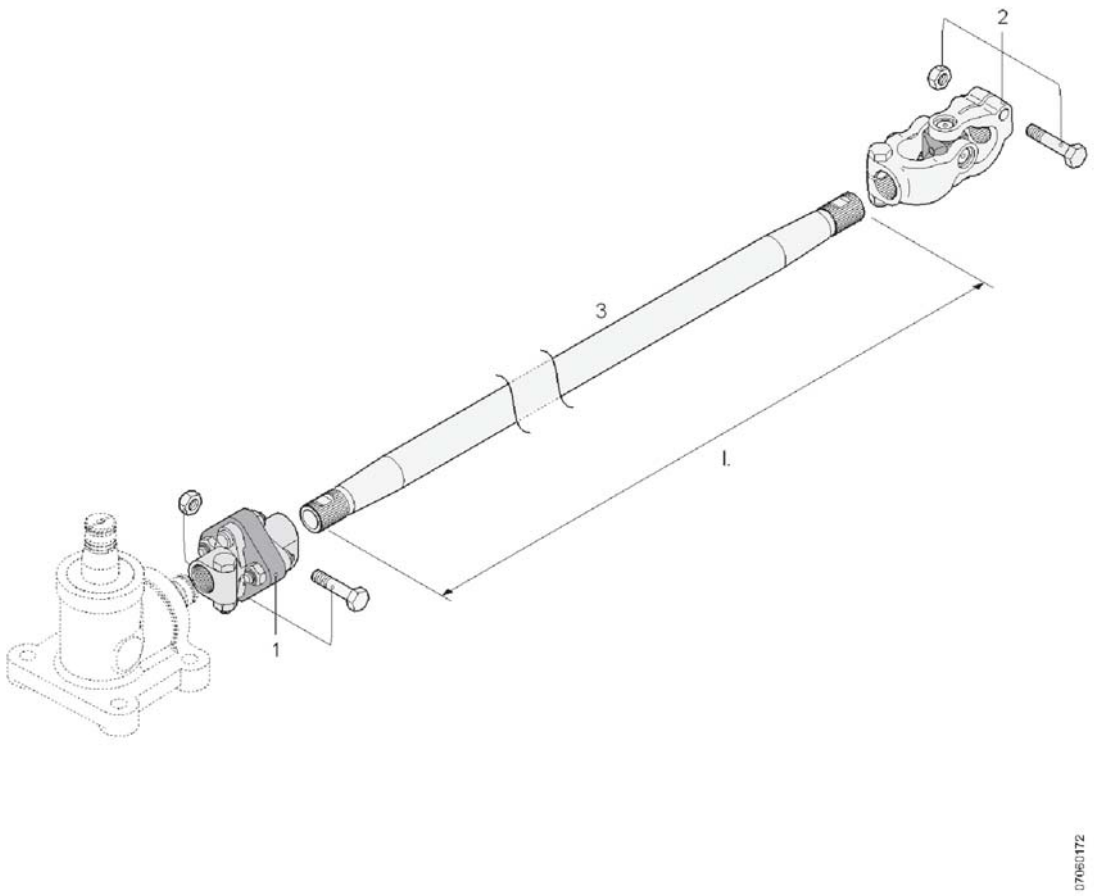

Pos.	Q.	Part n°	Description	Specification
1	1	634203950	Flexible coupling	
	*2	Z368030121	Screw	M10x1,25x45
	*2	10513551	Lock nut	DIN 985 M10x1,25 k.=10
2	1	10966958	Articulation	
	*2	Z368030126	Screw	DIN 988 M10x1,25x56 k.=10.9
	*2	10513551	Lock nut	DIN 985 M10x1,25 k.=10
3	1	634204010	Intermediate shaft	l.=1321mm

Steering mechanism: steering gear box

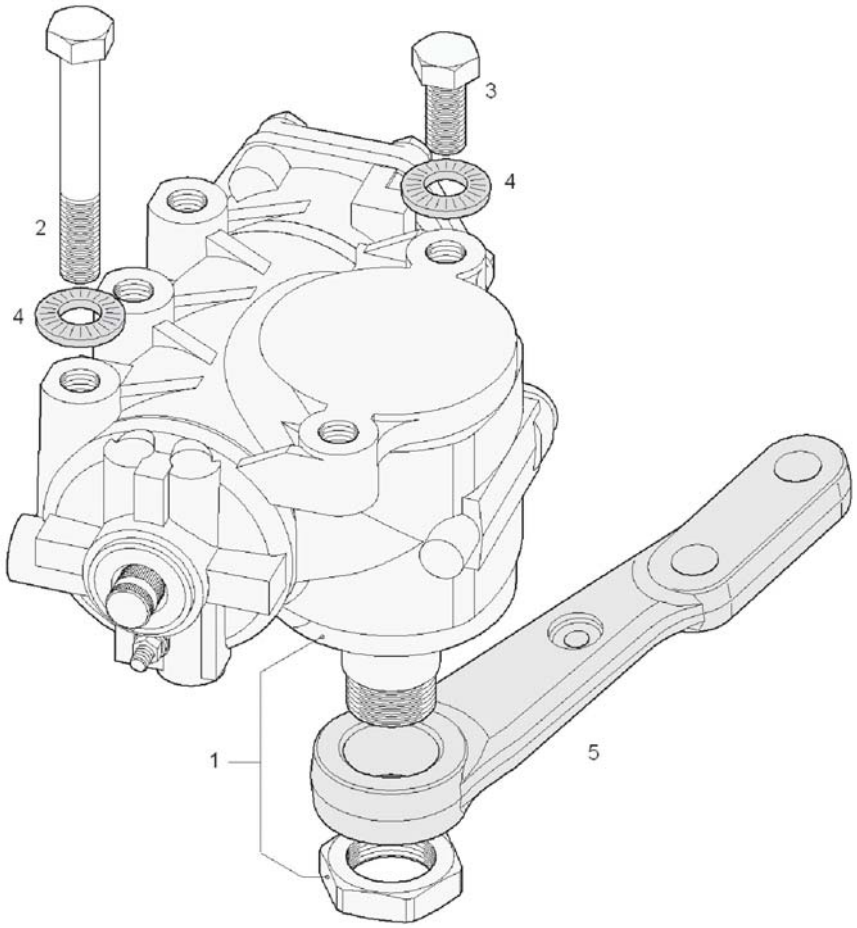

Pos.	Q.	Part n°	Description	Specification
1	1	10951983	Steering gear box	
	*1	10678739	Lock nut	M45x1,5
2	1	660251082	Screw	DIN 960 M20x1,5x140 k.=10.9
3	4	10748264	Screw	DIN 961 M20x1,5x45 k.=10.9
4	5	660632603	Coil spring lock washer	DIN 6796 A20
5	1	10647857	Drop arm	

Steering mechanism: steering linkage

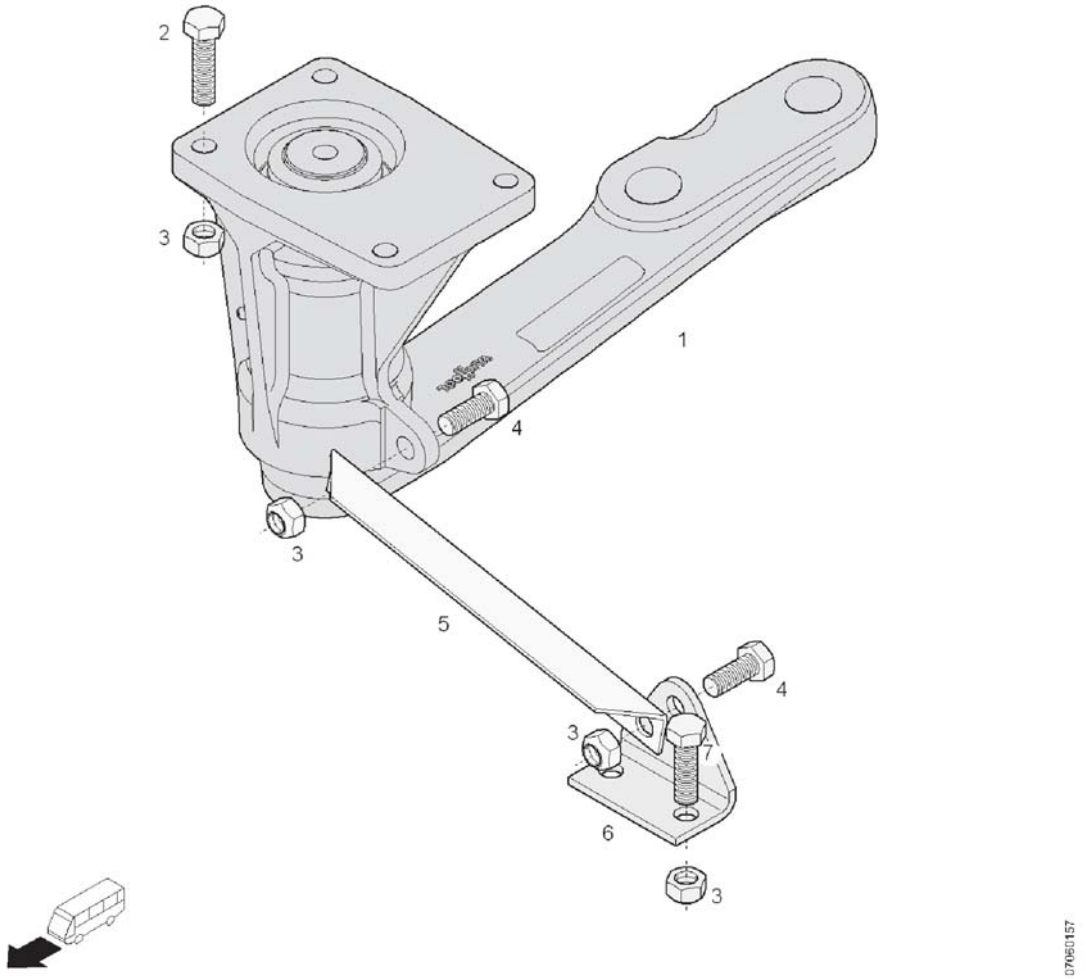

Pos.	Q.	Part n°	Description	Specification
1	1	10651533	Intermediate lever	
2	4	10572299	Screw	DIN 933 M12x1,75x45 k.=10.9
3	8	660207415	Lock nut	DIN 980 M12x1,75 k.=10
4	2	660226504	Screw	DIN 933 M12x1,75x30 k.=10.9
5	1	10528634	Bracket	
6	1	10528633	Bracket	
7	2	660226705	Screw	DIN 933 M12x1,75x40 k.=10.9

Components

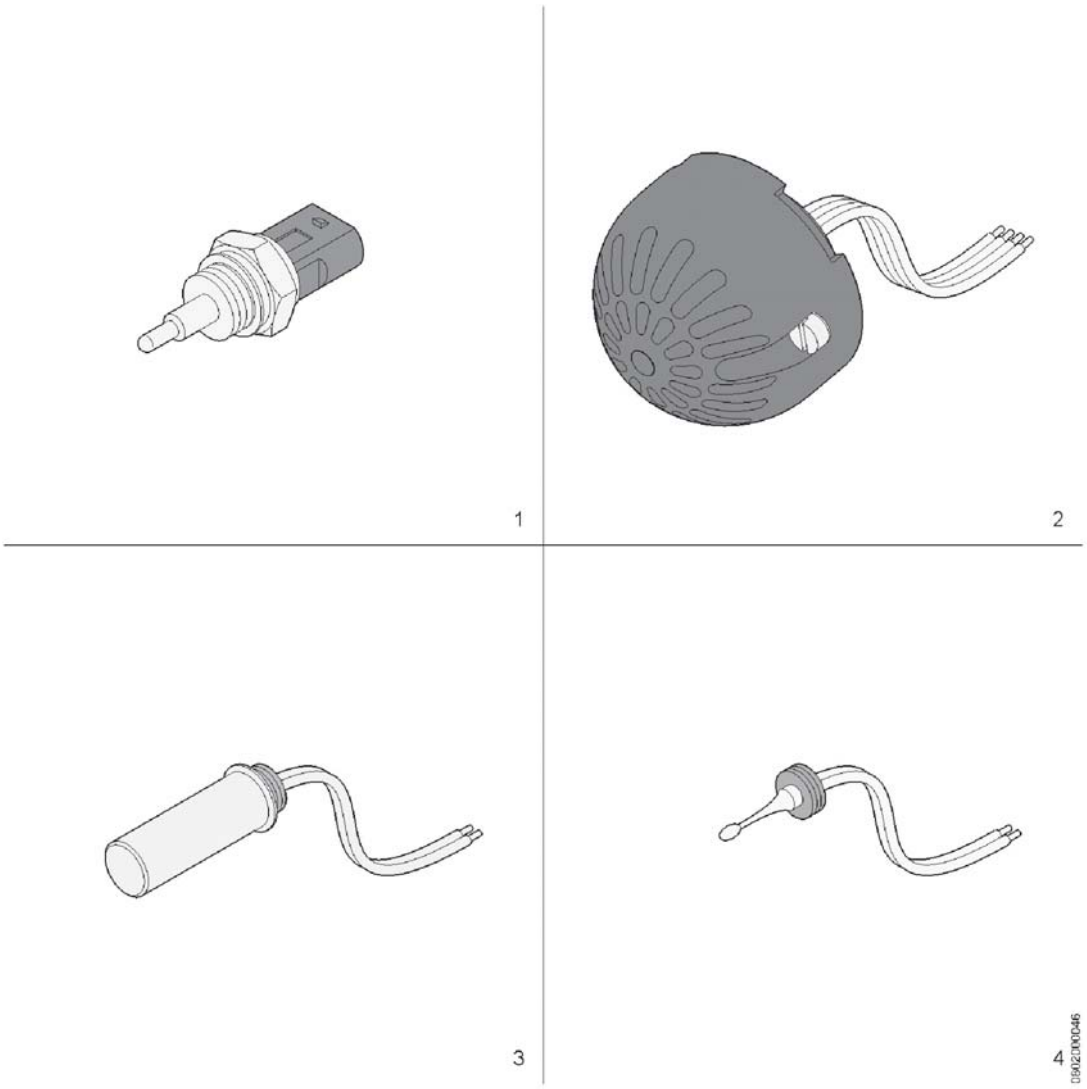

Pos.	Q.	Part n°	Description	Specification
1	2	11268848	Temperature sensor	NTC 2K2
2	2	11259249	Temperature sensor	NTC 4K7 (GS)
3	1	11259250	Temperature sensor	NTC 4K7
4	2	11259251	Temperature sensor	NTC 4K7

Air nozzles

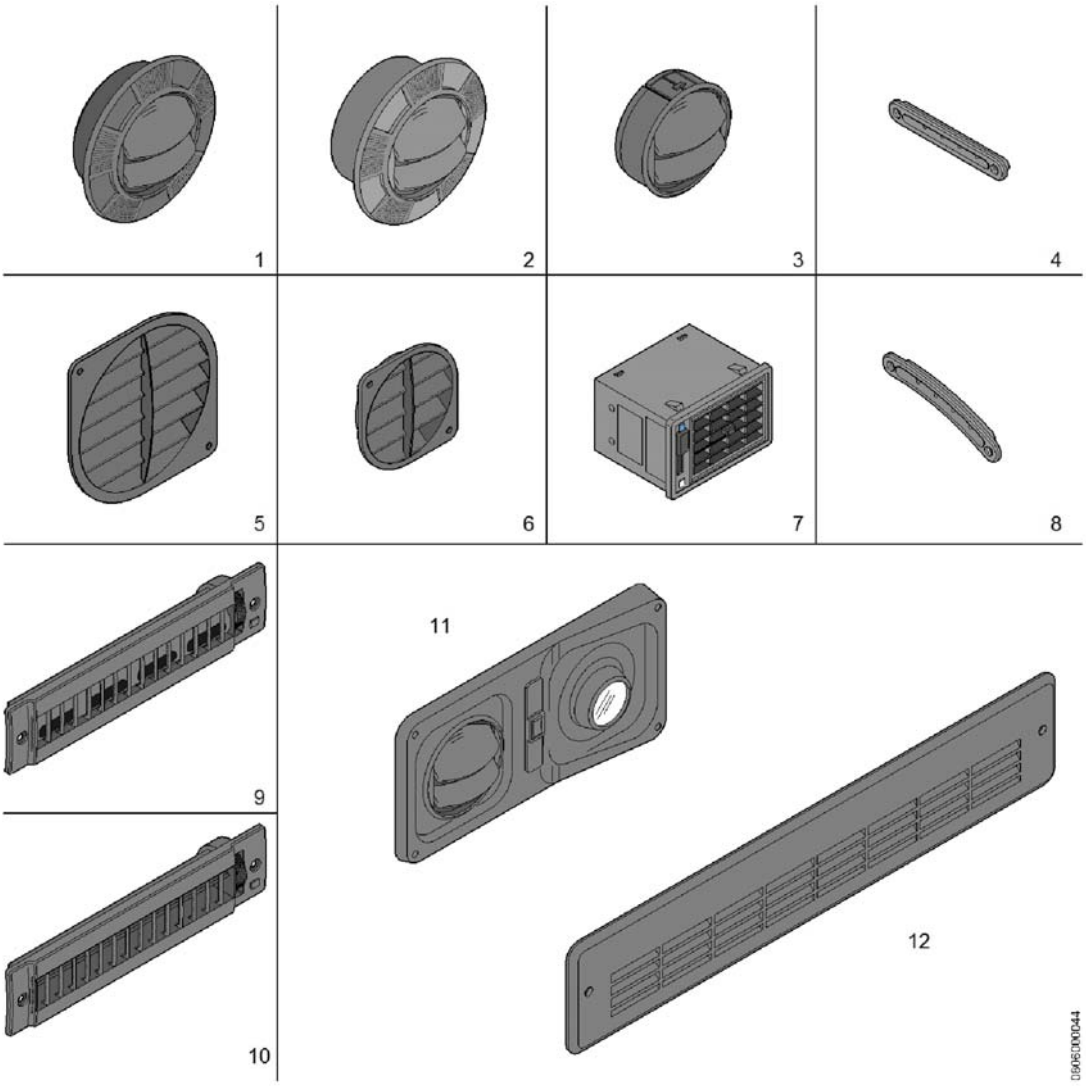

Pos.	Q.	Part n°	Description	Specification
1	#	660744685	Air nozzle	Ø76mm (Z) short type
2	#	10557060	Air nozzle	Ø76mm (RAL 7043) long type
3	#	10570844	Air nozzle	Ø75mm (GS)
4	#	10527920	Air nozzle	(RAL 7012)
5	#	660520439	Air nozzle	Ø75mm
6	#	660520405	Air nozzle	Ø55mm
7	#	E000910448	Air nozzle	80x54 (Z)
8	#	10552006	Air nozzle	(RAL 7012)
9	#	10606732	Air nozzle	(RAL 7012)
10	#	10560711	Air nozzle	(RAL 7012)
11	#	10557062	Air nozzle	(GS)
12	#	10719588	Air nozzle	(RAL 7012)

Front climate unit

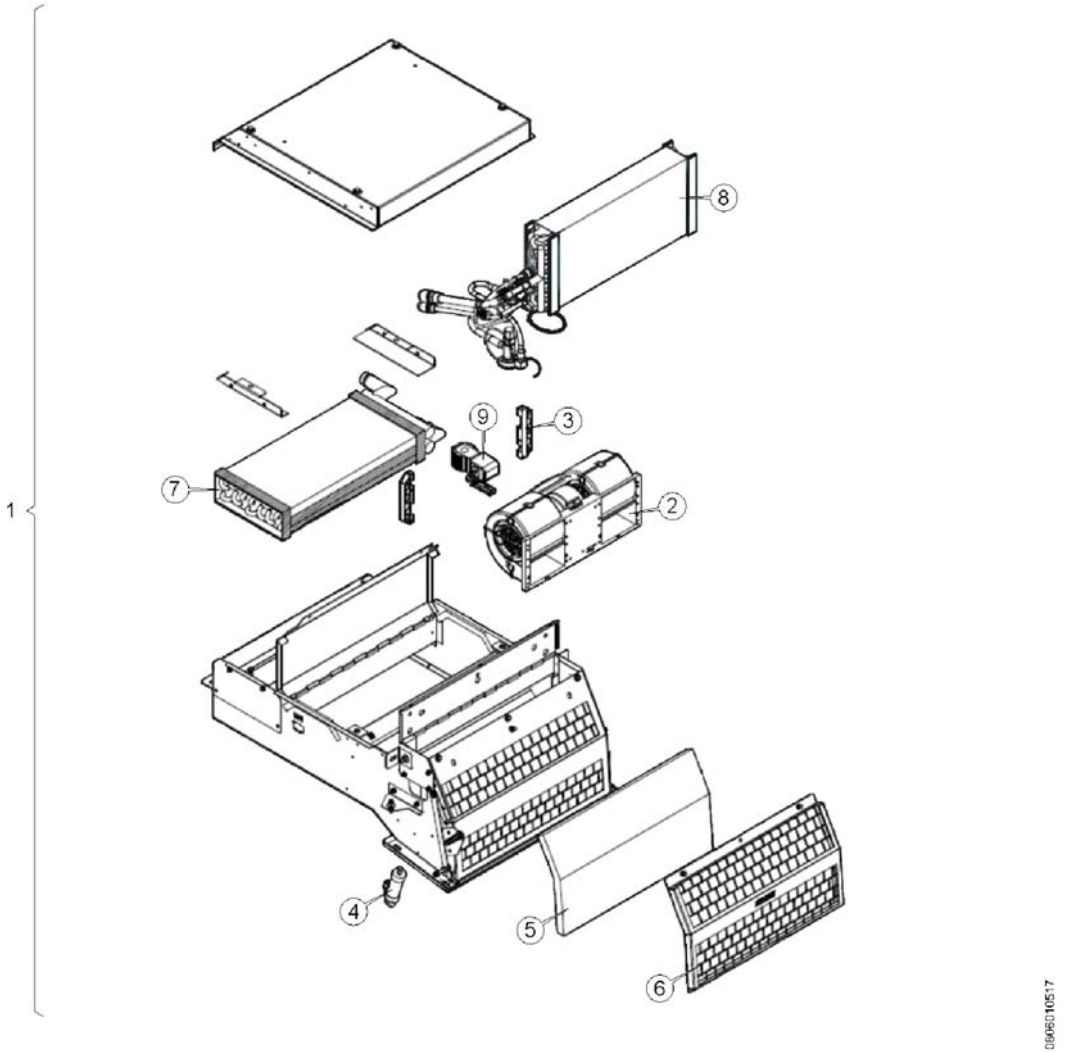

Pos.	Q.	Part n°	Description	Specification
1	1	11368018	Front climate unit	Florijn
2	*1	11370295	Blower	24V
3	*2	10948134	Fastener	
4	*1	10591036	Cylinder	
5	*1	11279518	Filtering cloth	455x250x20
6	*1	11279519	Grille	
7	*1	11205743	Radiator	MAT:AL
8	*1	11425053	Evaporator with accessories	
9	*1	11206878	Solenoid	

Water pump

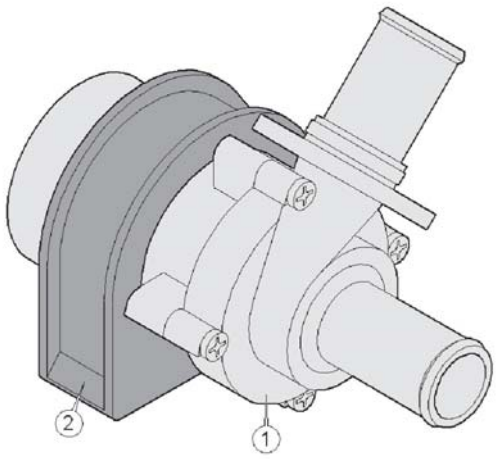

06100175

Pos.	Q.	Part n°	Description	Specification
1	1	11250600	Water pump	Eberca 1400 - 24V
2	1	11298993	Clamp	Ø48mm

Water pump

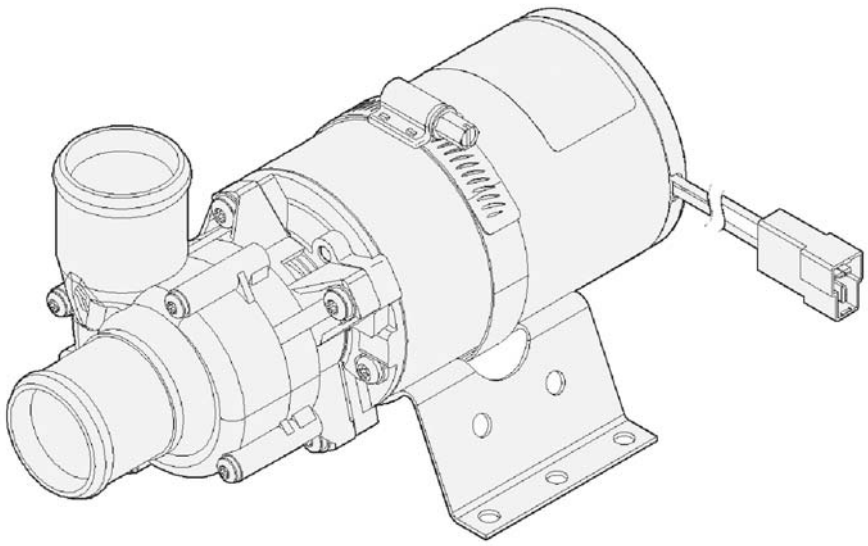

Pos.	Q.	Part n°	Description	Specification
1	1	11310230	Water pump	Flowtronic 5000

Water heater

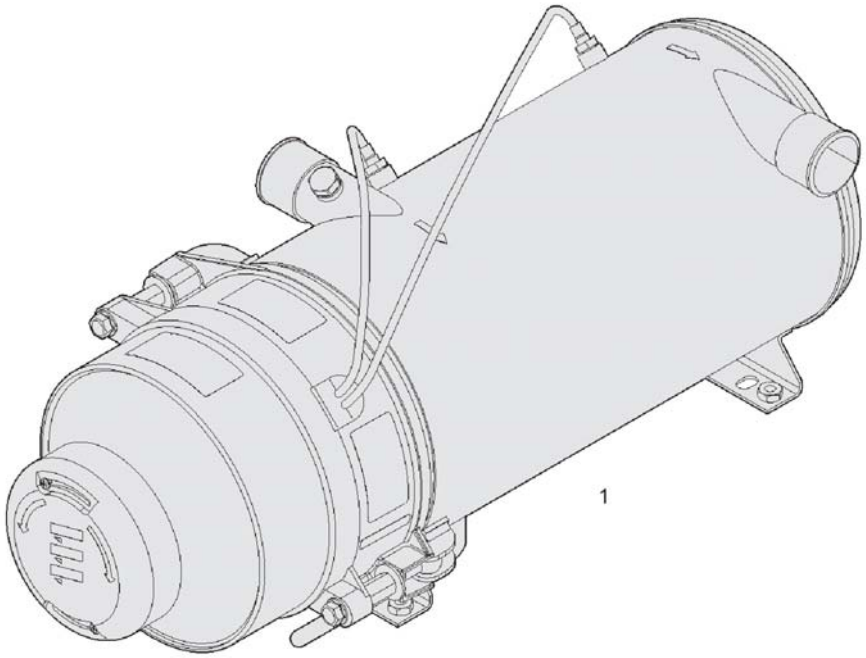

Pos.	Q.	Part n°	Description	Specification
1	1	11286524	Water heater	Hydronic 30 - 24V

Coolant heater: fuel filter

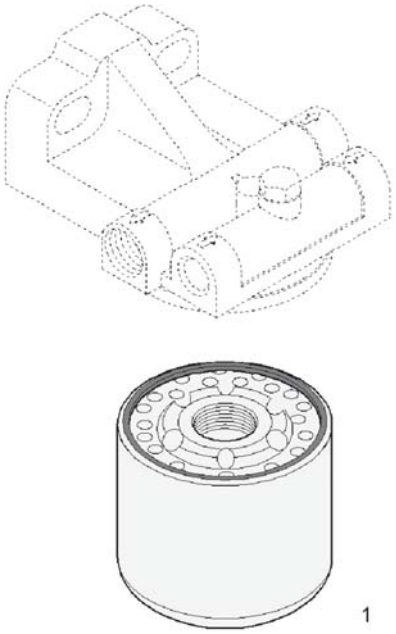

Pos.	Q.	Part n°	Description	Specification
1	1	631204820	Filter element	

Water heater: fuel pipes

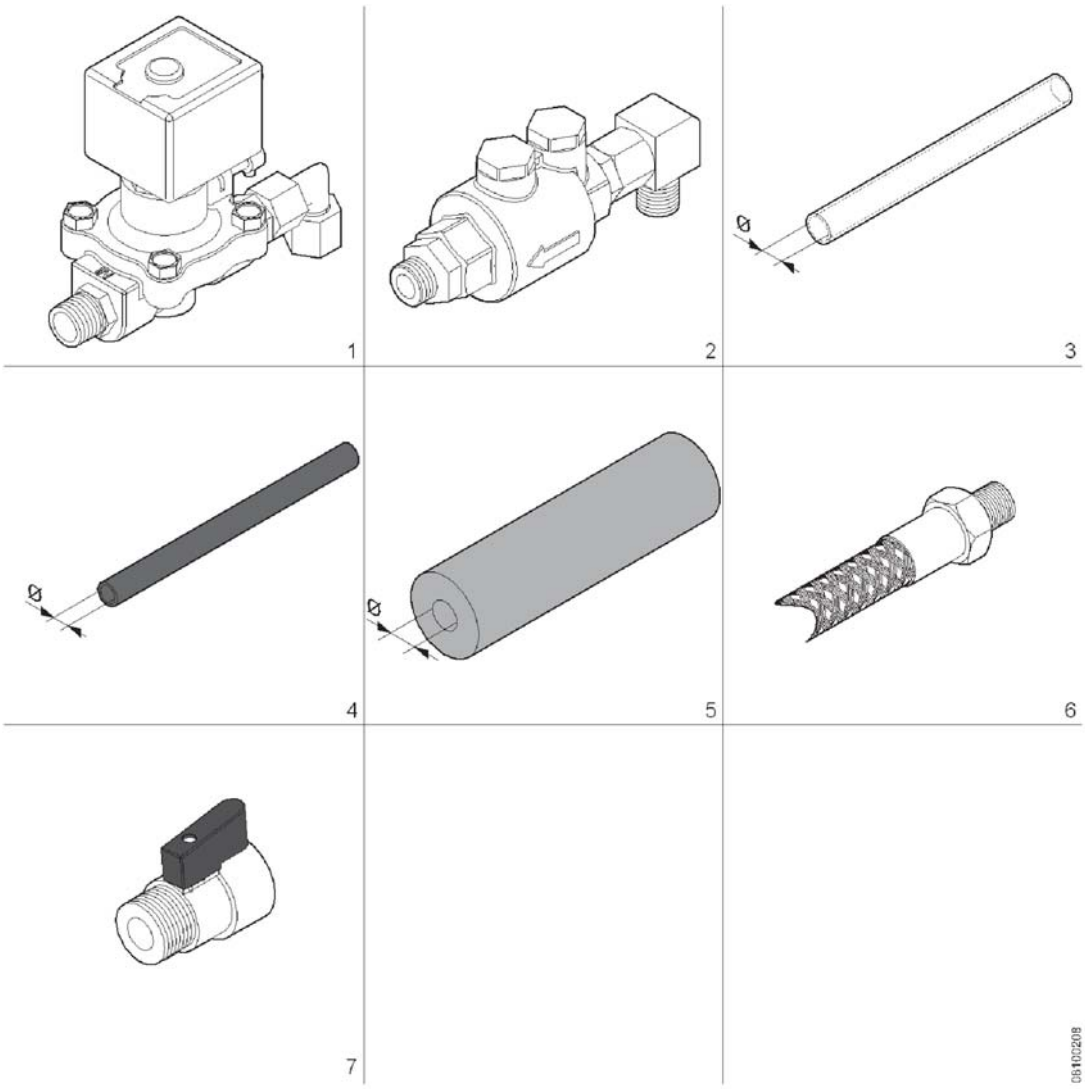

Pos.	Q.	Part n°	Description	Specification
1	1	11232050	Solenoid valve, with accessories	3/8"
	*1	11167292	Solenoid valve	NC-3/8"
2	1	11278246	One-way valve + accessories	3/8"
	*1	11220599	One-way valve	3/8"
3	#m	660516109	Hose	Ø10x1 MAT:P (T)
4	#m	11318578	Hose	Ø8x1 MAT:P (Z)
5	#m	11283773	Insulating material	Ø28 l.=2m
6	2	752012701	Hose	
7	1	660577800	Cock	3/8"

Water heater: exhaust system

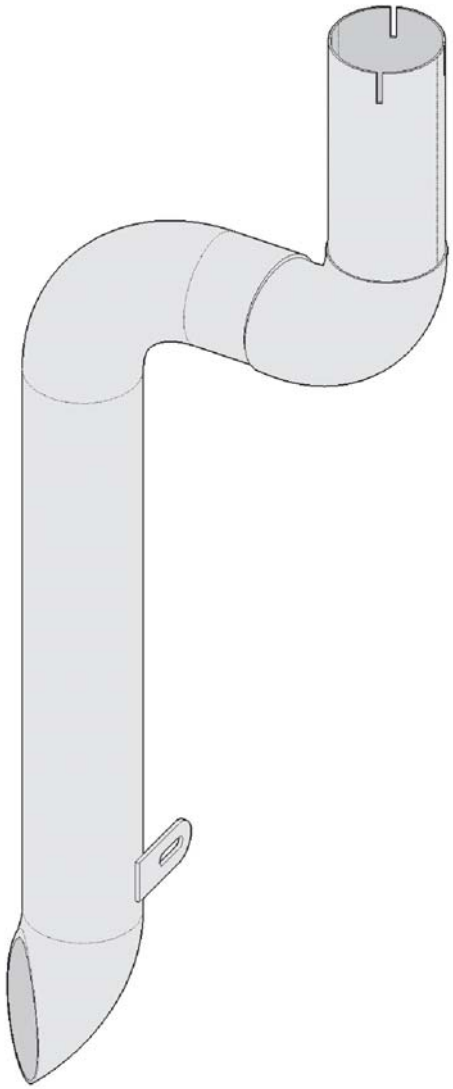

Pos.	Q.	Part n°	Description	Specification
1	1	11358850	Exhaust pipe	

Valve block (MATRIX)

Pos.	Q.	Part n°	Description	Specification
1	#	10933664	Valve	NO
2	*1	11062883	Plunger	DN25
3	#	10933666	Valve	NG
4	*1	11062888	Plunger	DN20
5	#	10936762	Solenoid valve	3/2 NG
	#	11062891	Solenoid valve	3/2 NO
6	#	10927915	Solenoid valve	3/2 NG
7	#	10924121	Cover	
8	#	10924108	Connection	Ø22
	#	10924114	Connection	Ø28
	#	10924118	Connection	Ø34
9	#	10924113	Connection	Ø22-90°
	#	10924116	Connection	Ø28-90°
	#	10924120	Connection	Ø34-90°
10	#	11062893	Muffler	1/8"
11	#	10933667	Governor valve	1/8"
12	#	10940895	Cap	
13	#	10583622	O-ring	5x1,5

Valve block (MATRIX)

Pos.	Q.	Part n°	Description	Specification
14	#	11062896	Connector	24V+LED
15	#	11062898	Screw	DIN 912 M3x0,5x16 MAT:IN
16	#	10748024	Coupling	G1/8"xØ6-90°
	#	10899731	Coupling	G1/8"xØ0,3-Ø6-90°
	#	10990024	Coupling	G1/8"xØ0,5-Ø6-90°
17	#	10748039	Coupling	G1/8"xØ6
18	#	10748031	Coupling	M5xØ6-90°

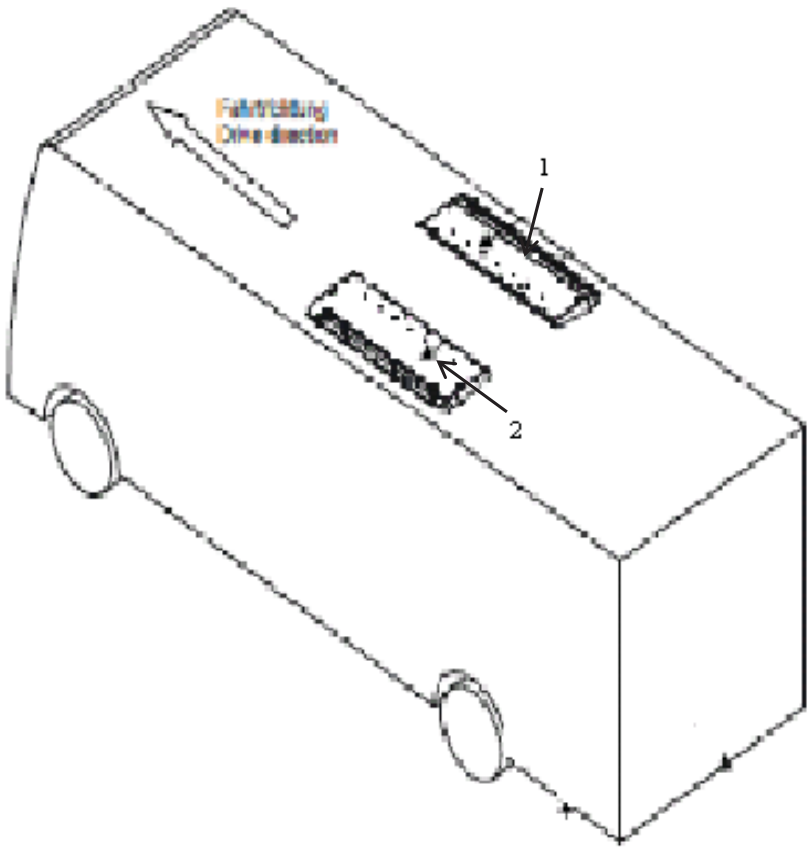

Pos.	Q.	Ref. N	Description	Demominacion	Spec.
1	1	11387461	Evaporator Assy, Right		TX
2	1	11387463	Evaporator Assy, Left		TX

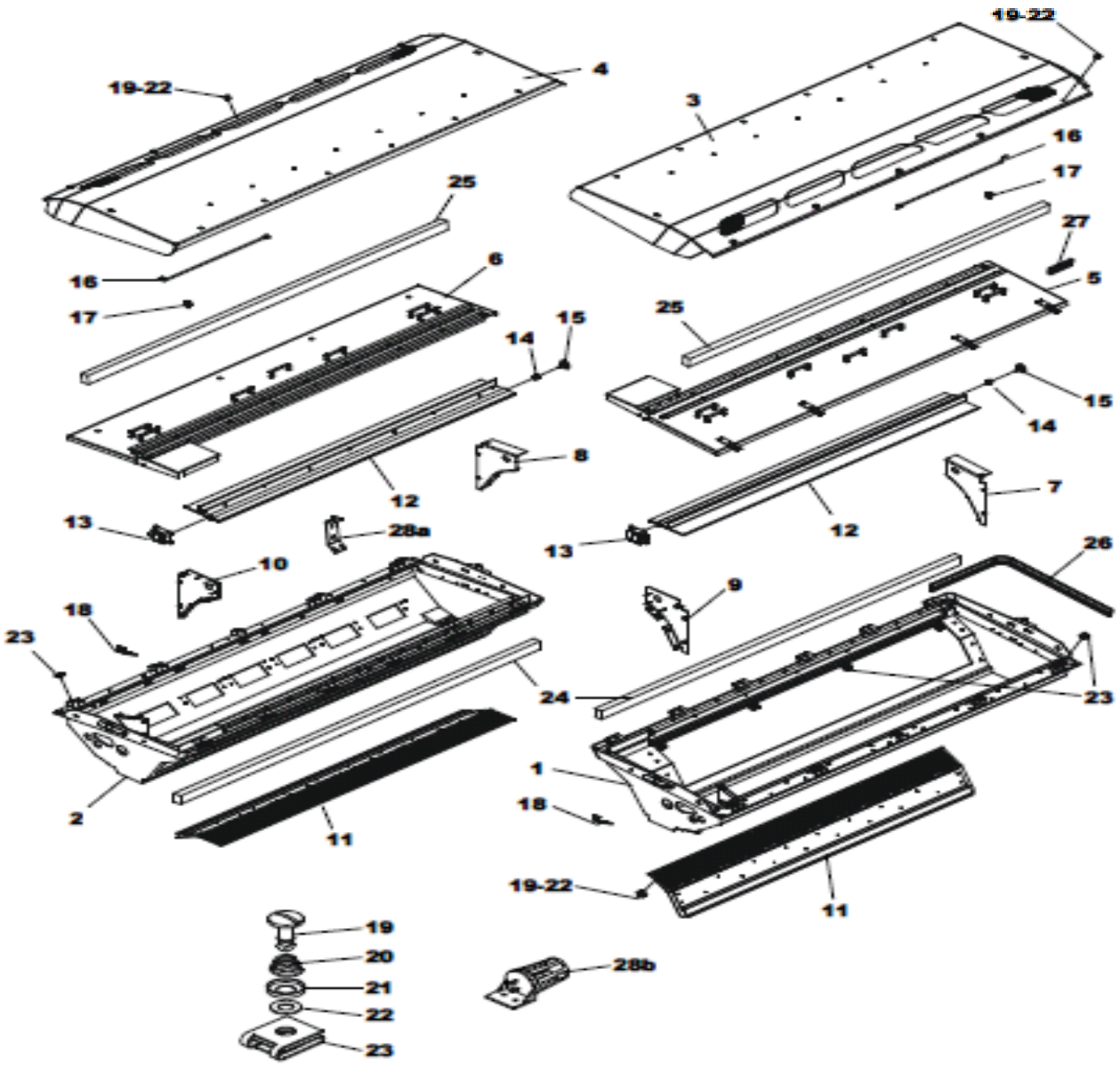

Pos.	Q.	Ref. N	Description	Demominacion	Spec.
1	1	ABC-15500	Evaporator Housing Base Right		88-50-10-00186-00
2	1	ABC-15501	Evaporator Housing Base Left		88-50-10-00187-00
3	1	11292326	Evap Cover, RH, Painted Black		88-32-02-00011-00
or	1	11299319	Evap Cover, RH, Painted White		88-32-02-00008-00
4		11292325	Evap Cover, LH, Painted Black		88-32-02-00012-00
or	1	11292322	Evap Cover, LH, Painted White		88-32-02-00009-00
5	1	ABC-15502	Intermediate cover Right		88-50-10-00184-00
6	1	ABC-15503	Intermediate cover Left		88-50-10-00185-00
7	1	ABC-15504	Mounting plate, flap front right		88-50-47-00410-00
8	1	ABC-15505	Mounting plate, flap front left		88-50-47-00412-00
9	1	ABC-15506	Mounting plate, flap rear right		88-50-47-00405-00
10	1	ABC-15507	Mounting plate, flap rear left		88-50-47-00406-00
11	2	11390564	Return air grid		88-50-58-00023-00
12	2	ABC-15508	Fresh air flap		88-50-29-00319-00
13	2	11307407	Servomotor 24VDC		88-69-03-00005-00
14	2	ABC-15509	Journal box		88-50-04-00004-00
15	2	ABC-15510	Flap support		88-50-04-00005-00
16	2	ABC-15511	Support Stay		88-50-47-00242-00

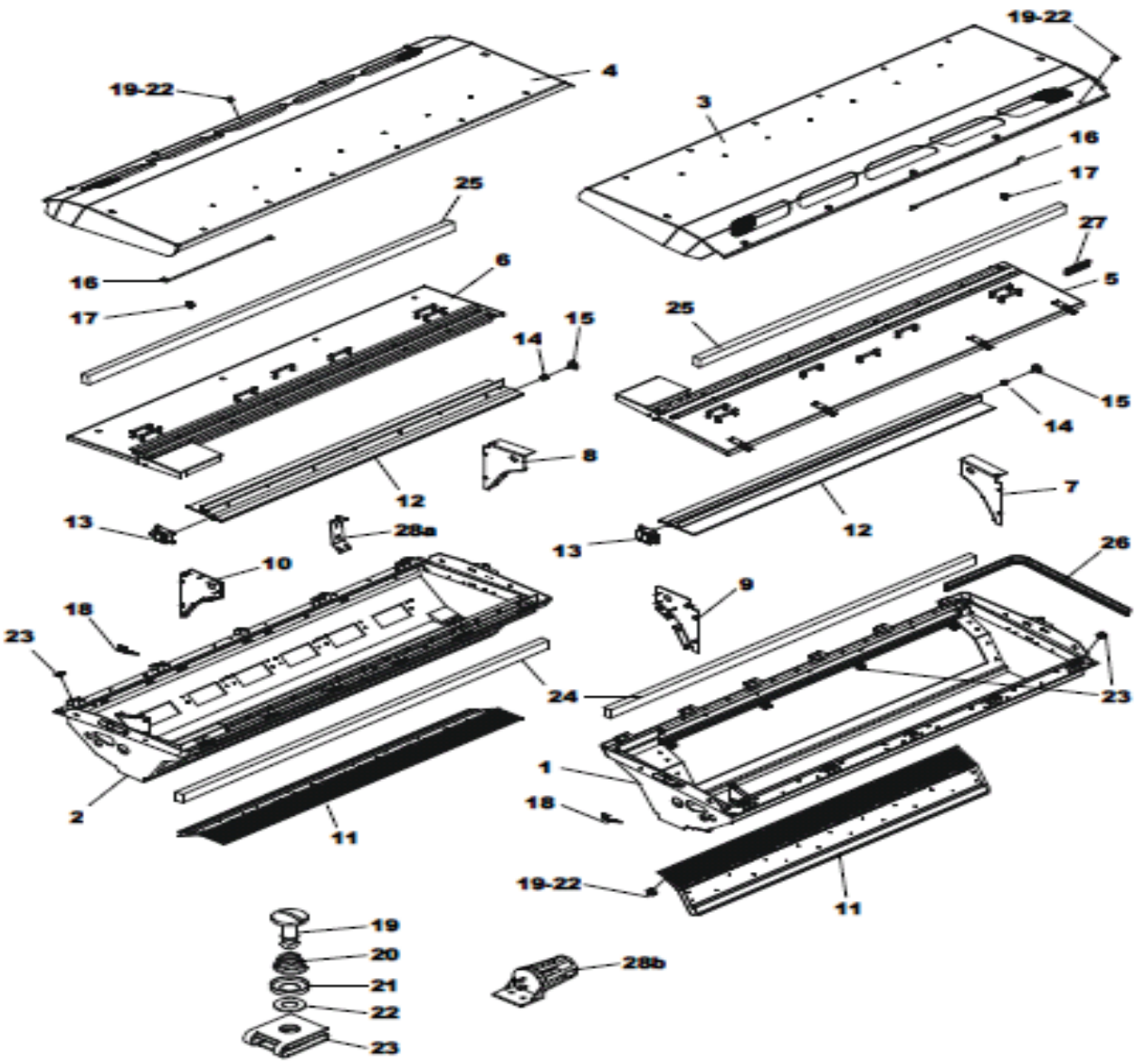

Pos.	Q.	Ref. N	Description	Demominacion	Spec.
17	2	ABC-15512	Clip		88-82-99-00001-00
18	2	ABC-15513	Support f. Valve Solenoid		88-50-47-00408-00
19	18	11325375	Locking pin		88-50-16-00014-00
20	18	11325376	Pressure spring		88-50-16-00015-00
21	18	11325377	Washer		88-50-45-00035-00
22	18	11325378	Snap-ring		88-50-45-00036-00
23	18	11325380	Retainer cam		88-50-16-00016-00
24	2	11387200	Filter 1700x45x30		88-50-02-00009-00
25	2	11328193	Filter 1850x45x30		88-50-02-00010-00
26	1	ABC-15514	Profiled Joint	5.4m	88-81-05-00002-00
27	7	ABC-15515	Profiled Joint	0.1m	88-81-05-00006-00
28	1	11311395	ASSY Temperature sensors	V188 left	88-41-04-00002-00
28a	1	ABC-15516	Bracket for temperature sensor		88-50-47-00407-00
28b	1	ABC-15055	Temperature sensor		88-83-06-00021-00

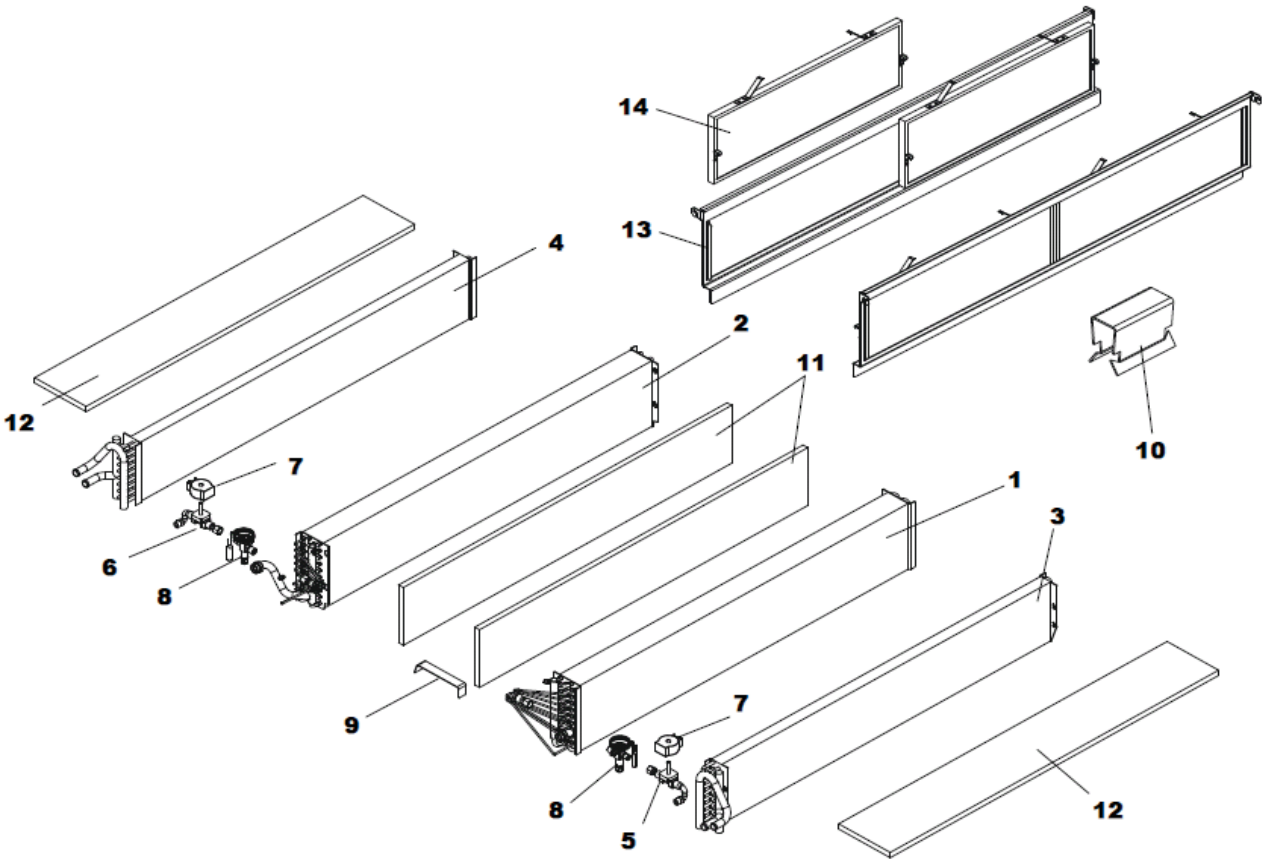

Pos.	Q.	Ref. N	Description	Demominacion	Spec.
1	1	ABC-15517	Evaporator V188 right		88-50-23-00116-00
2	1	ABC-15518	Evaporator V188 left		88-50-23-00117-00
3	1	ABC-15519	Heater H188 right		88-50-23-00114-00
4	1	ABC-15520	Heater H188 left		88-50-23-00115-00
5	1	11342232	Liquid line w/mag valve cartridge	Right	88-50-32-00244-00
6	1	ABC-15521	Liquid line w/mag valve cartridge	Left	88-50-32-00245-00
7	2	11182584	Valve coil 27VDC		88-83-22-00001-00
8	2	11324335	Expansion Valve R134a		88-50-30-00006-00
	2	10730463	Compensation Line		88-63-01-00001-00
	1	11182589	O-ring for ORFS 11/16”		88-63-07-00040-00
	1	ABC-10693	O-ring for ORFS 13/16”		88-63-07-00001-00
	2	632803130	Cu-sealing ring 7/16“UNF		88-63-07-00002-00
9	10	ABC-15523	Filter support		88-50-47-00409-00
10	12	ABC-15524	Clamp		88-50-33-00026-00
11	2	11317275	Filter 1400x220x20		88-50-02-00008-00
12	2	11393624	Insulation 1400x140x10		88-60-04-00017-00
13	2	11387208	Frame, Filter		88-50-47-00547-00
14	4	11384473	Aluminum Filter w/Grid	2 Filter system	88-50-02-00024-00

Compressor complete (Bitzer)

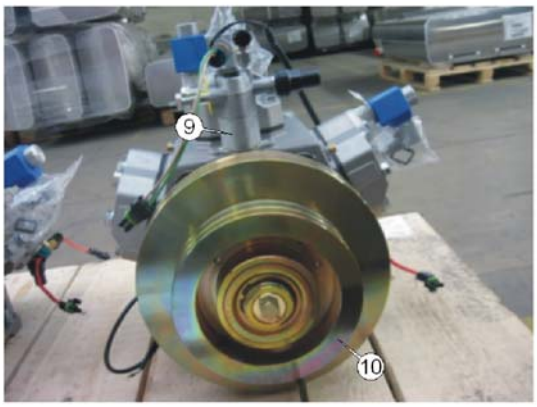

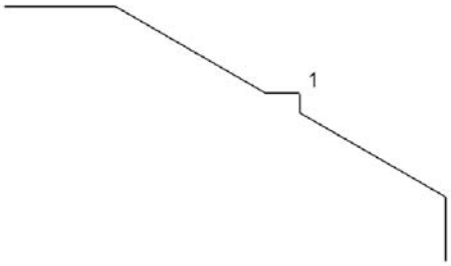

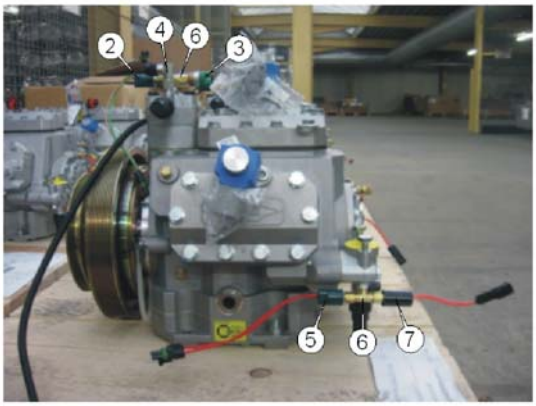

0614010061

Pos.	Q.	Part n°	Description	Specification
1	1	11293273	Climate control compressor, with	Bitzer 6TFC-713cc
2	*1	10657461	Pressure Switch	
3	*1	11163716	Pressure Switch	
4	*1	10736021	Quick coupling	High pressure side
5	*1	10728682	Pressure Switch	
6	*1	10637905	T-piece	1/8"NPT - 2x1/4"SAE
7	*1	10657463	Pressure Switch	
8	*1	10736022	Quick coupling	Low pressure side
9	*1	10639111	Spacer	
10	*1	11227131	Electro magnetic clutch	KK73.5.212

Safety-belt cutter

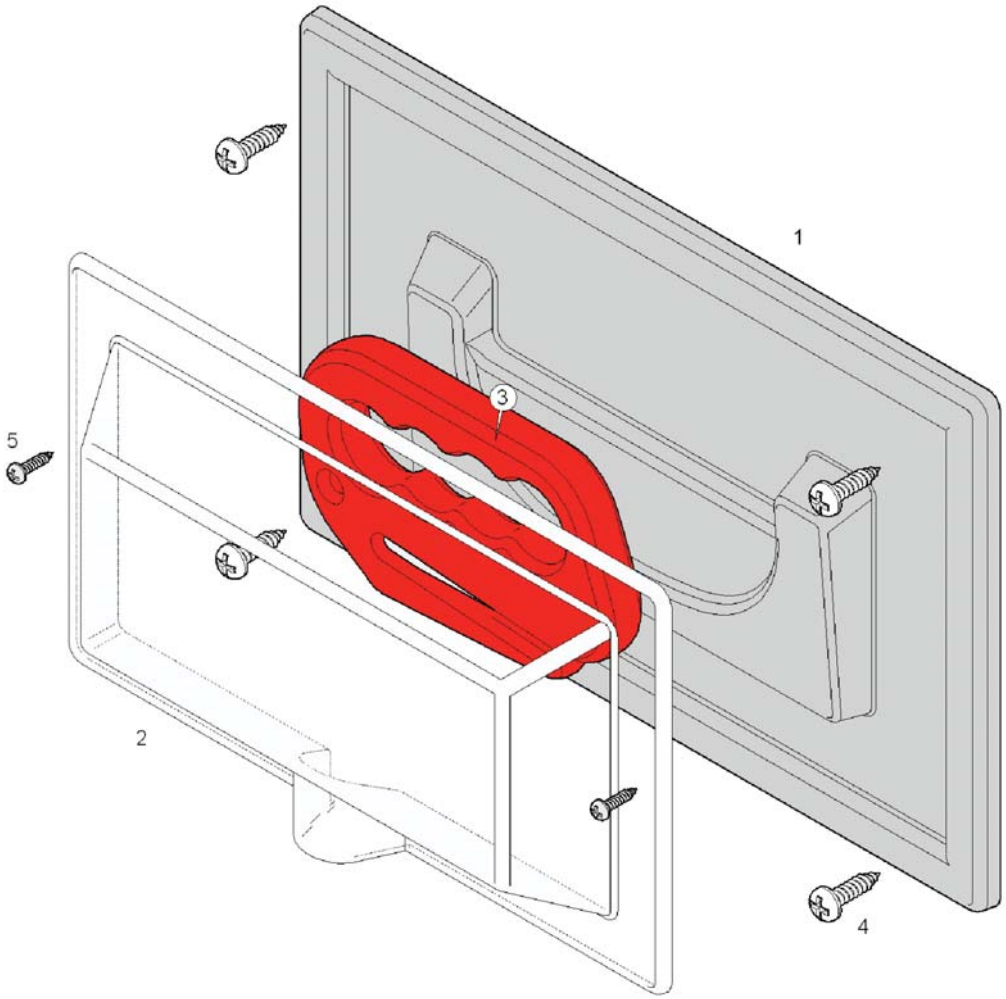

Pos.	Q.	Part n°	Description	Specification
1	1	11244115	Holder	MAT: ABS (RAL 7012)
2	1	660191708	Protection shield	
3	1	10619689	Safety-belt cutter	
4	4	660272006	Screw	DIN 7981 4,8 X 3/4"
5	2	660270206	Screw	DIN 7981 2,9 X 1/2"

Headlights: fixing (Li)

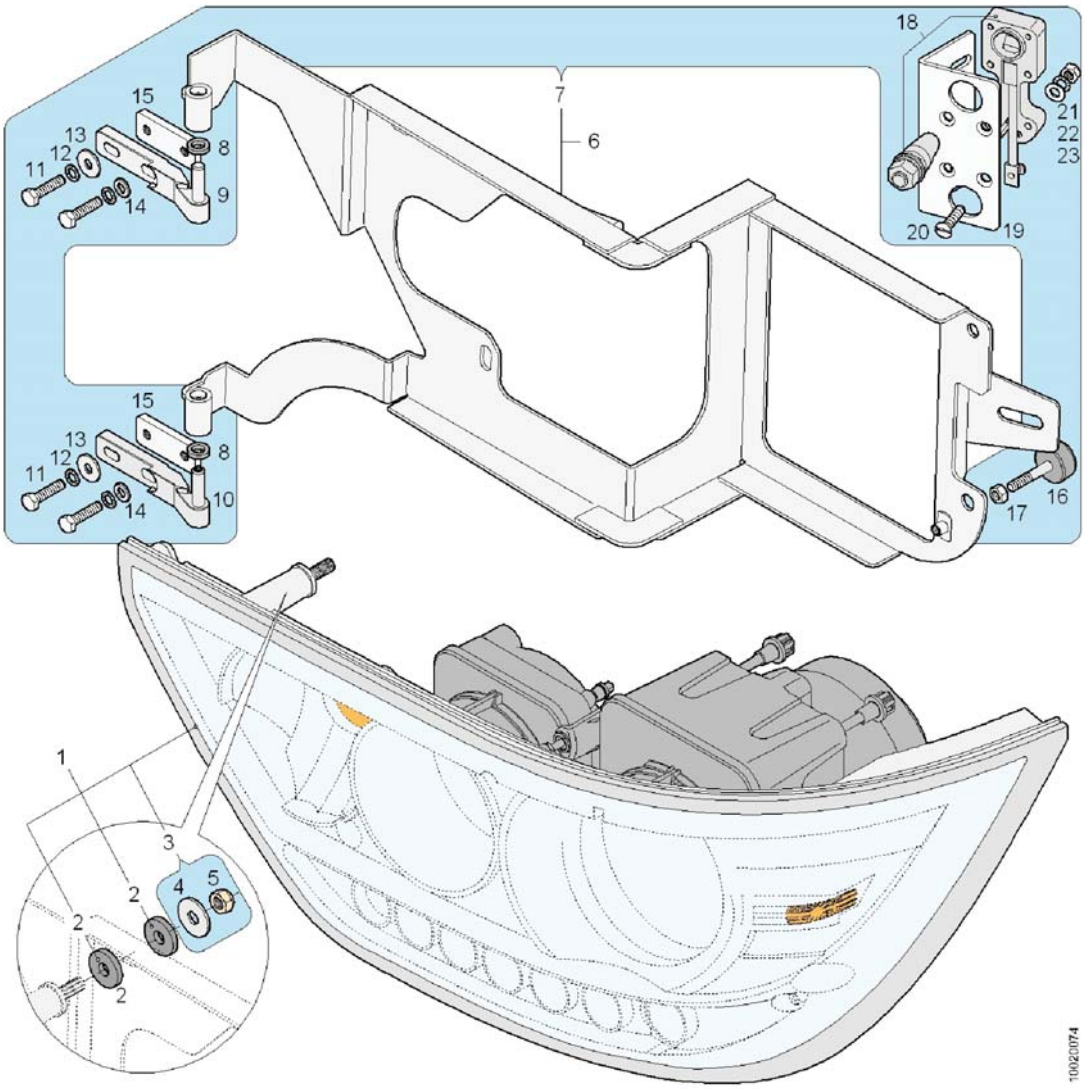

Pos.	Q.	Part n°	Description	Specification
1	1	»1002.02-0112	Headlight	Li
2	*#	11314225	Rubber	
3	*1	11319254	Set of assembly parts	
4	**#	660625907	Washer	DIN 9021 A8,4 MAT:IN
5	**#	660207100	Lock nut	DIN 985 M8x1,25 k.=8
		-		
6	1	90301452	Mounting bracket	
7	*1	11319252	Set of assembly parts	
8	**2	10644411	Washer	MAT:P 13.5x8.1x3
9	**1	90301457	Hinge pin	
10	**1	90301491	Hinge pin	
11	**4	660229755	Screw	DIN 933 M6x1x25mm MAT:IN
12	**4	660637605	Coil spring lock washer	DIN 6798 A6 MAT:IN
13	**2	660623508	Washer	DIN 9021 M6 MAT:IN
14	**2	660623507	Washer	DIN 125 6,4x12,5x1,6 MAT:IN
15	**2	90301463	Fastener	
16	**2	31100075	Stop	MAT:R M6 Ø25x17
17	**2	660209922	Nut	DIN 934 M6x1 MAT:IN

Headlights: fixing (Li)

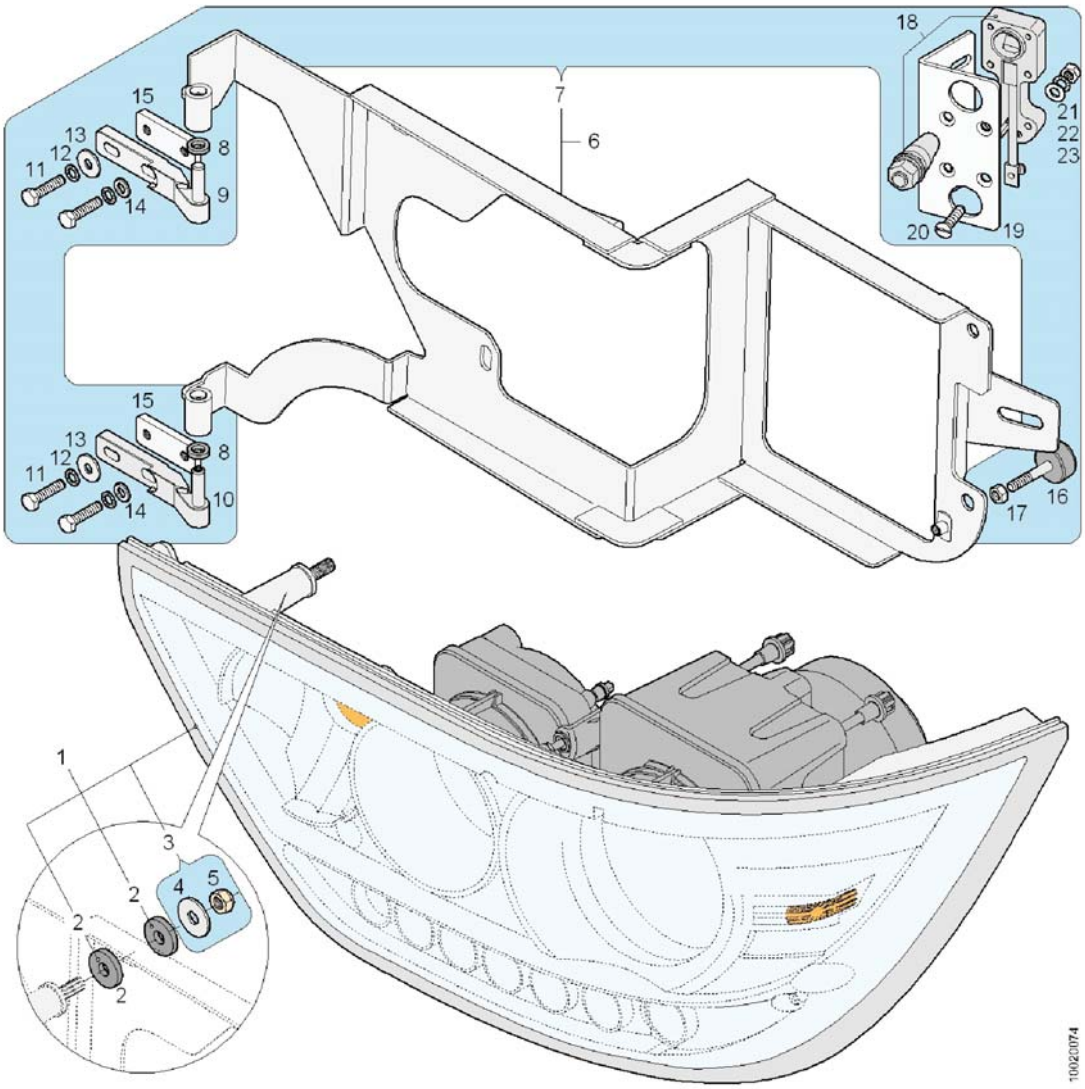

Pos.	Q.	Part n°	Description	Specification
18	**1	660171965	Lock	
19	**1	90301464	Mounting bracket	
20	**4	660283604	Screw	DIN 963 M6x25 MAT:IN
21	**4	660623507	Washer	DIN 125 6,4x12,5x1,6 MAT:IN
22	**4	660637605	Coil spring lock washer	DIN 6798 A6 MAT:IN
23	**4	660209922	Nut	DIN 934 M6x1 MAT:IN

Headlights: unlocking mechanism (Li)

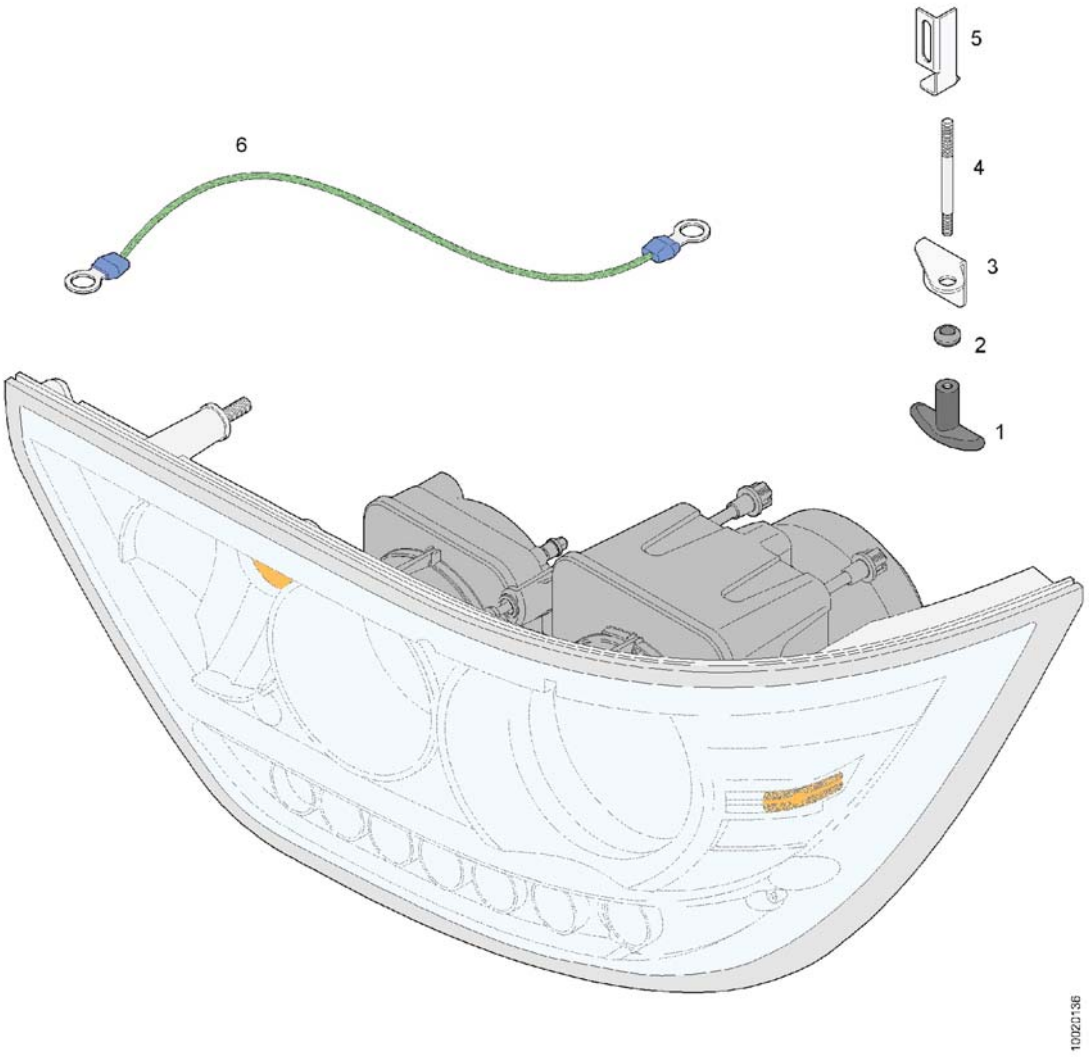

Pos.	Q.	Part n°	Description	Specification
1	1	10596265	Grab handle	M5 (Z) MAT:P
2	1	660779142	Grommet	MAT:P Ø8
3	1	11002489	Slide	MAT: IN
4	1	91100635	Rod	
5	1	10704783	Fastener	
6	1	11302447	Cord	

Headlights

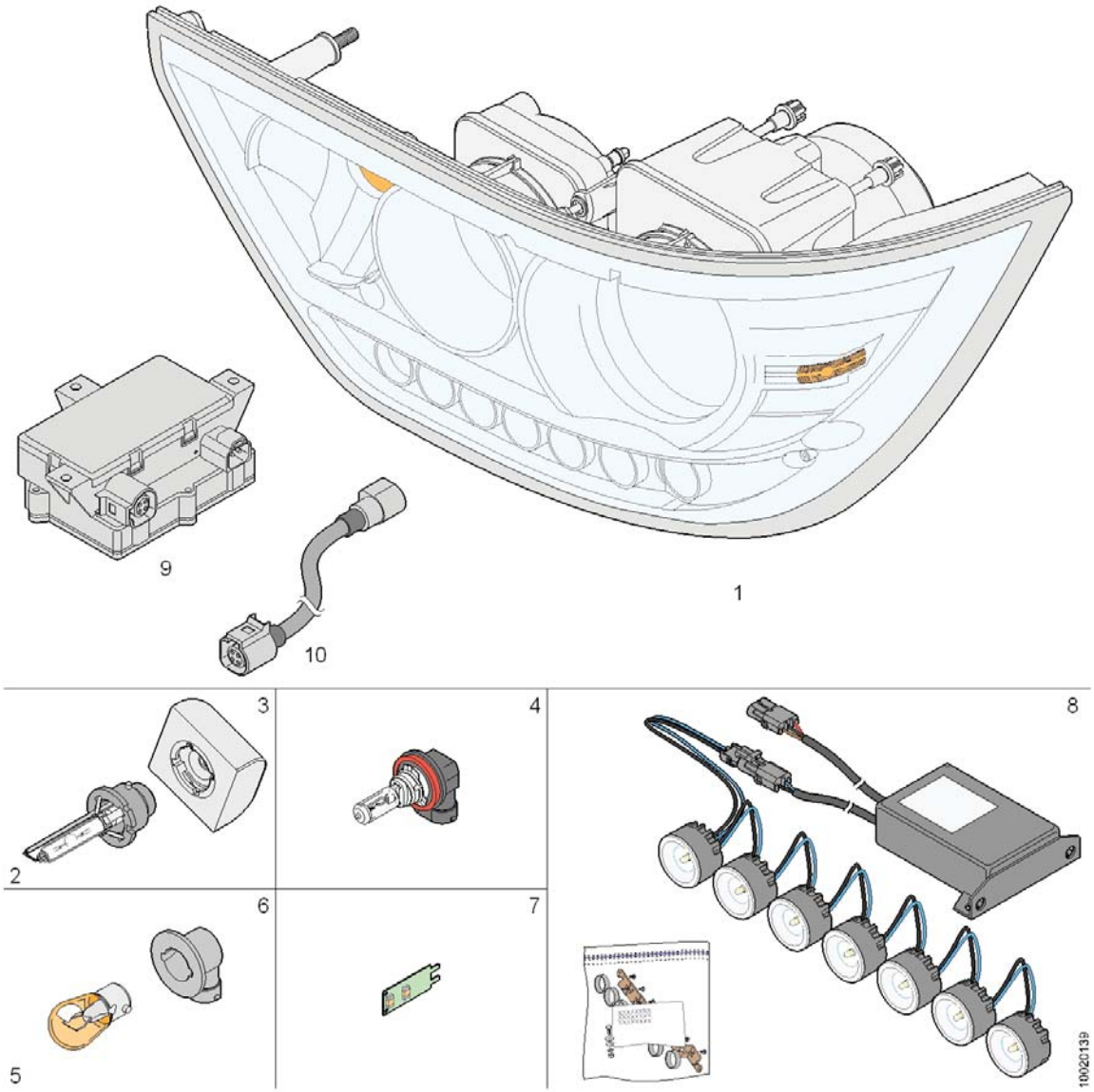

Pos.	Q.	Ref.N°	Description	Spec.
1	1	11325581	Headlight	Li (USA)
2	*1	10798547	Lamp	Xenon 12/24V-35W
3	*1	11294758	Ignition	
4	*1	11387072	Lamp bulb	H11 12V/55W
5	*1	11294763	Lamp bulb	24V 21W
6	*1	11294754	Lamp socket	
7	*1	11294753	Clearance lamp	
8	*1	11294744	Daylight running lamps + assembly parts	Li
		-		
9	1	11348986	Electronic control unit	Xenon 12V
10	1	11283378	Cable	

Headlights: fixing (Re)

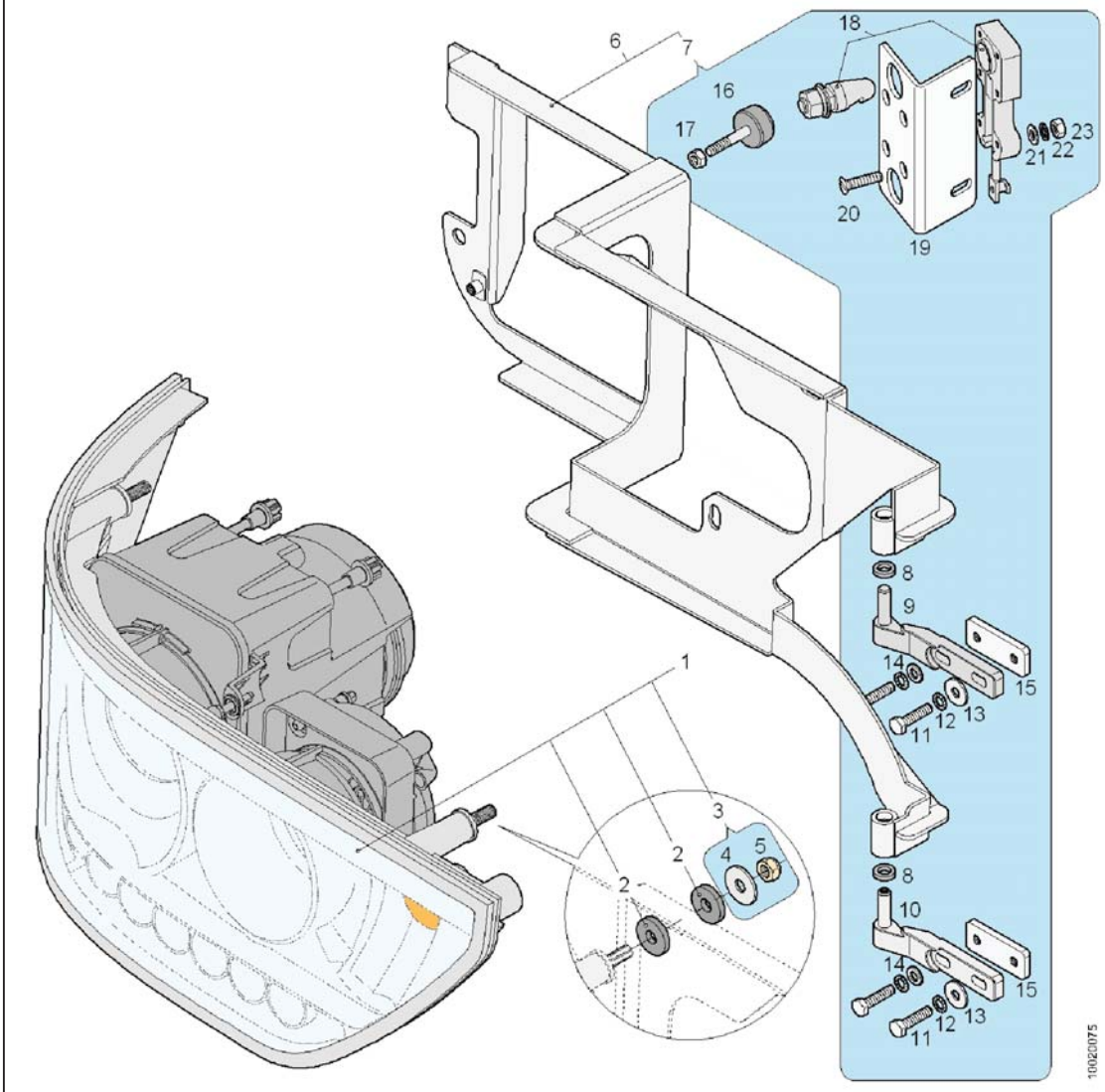

Pos.	Q.	Part n°	Description	Specification
1	1	»1002.02-0212	Headlight	Re
2	*#	11314225	Rubber	
3	*1	11319254	Set of assembly parts	
4	**#	660625907	Washer	DIN 9021 A8,4 MAT:IN
5	**#	660207100	Lock nut	DIN 985 M8x1,25 k.=8
		-		
6	1	90301454	Mounting bracket	
7	*1	11319252	Set of assembly parts	
8	**2	10644411	Washer	MAT:P 13.5x8.1x3
9	**1	90301456	Hinge pin	
10	**1	90301490	Hinge pin	
11	**4	660229755	Screw	DIN 933 M6x1x25mm MAT:IN
12	**4	660637605	Coil spring lock washer	DIN 6798 A6 MAT:IN
13	**2	660623508	Washer	DIN 9021 M6 MAT:IN
14	**2	660623507	Washer	DIN 125 6,4x12,5x1,6 MAT:IN
15	**2	90301463	Fastener	
16	**2	31100075	Stop	MAT:R M6 Ø25x17
17	**2	660209922	Nut	DIN 934 M6x1 MAT:IN

Headlights: fixing (Re)

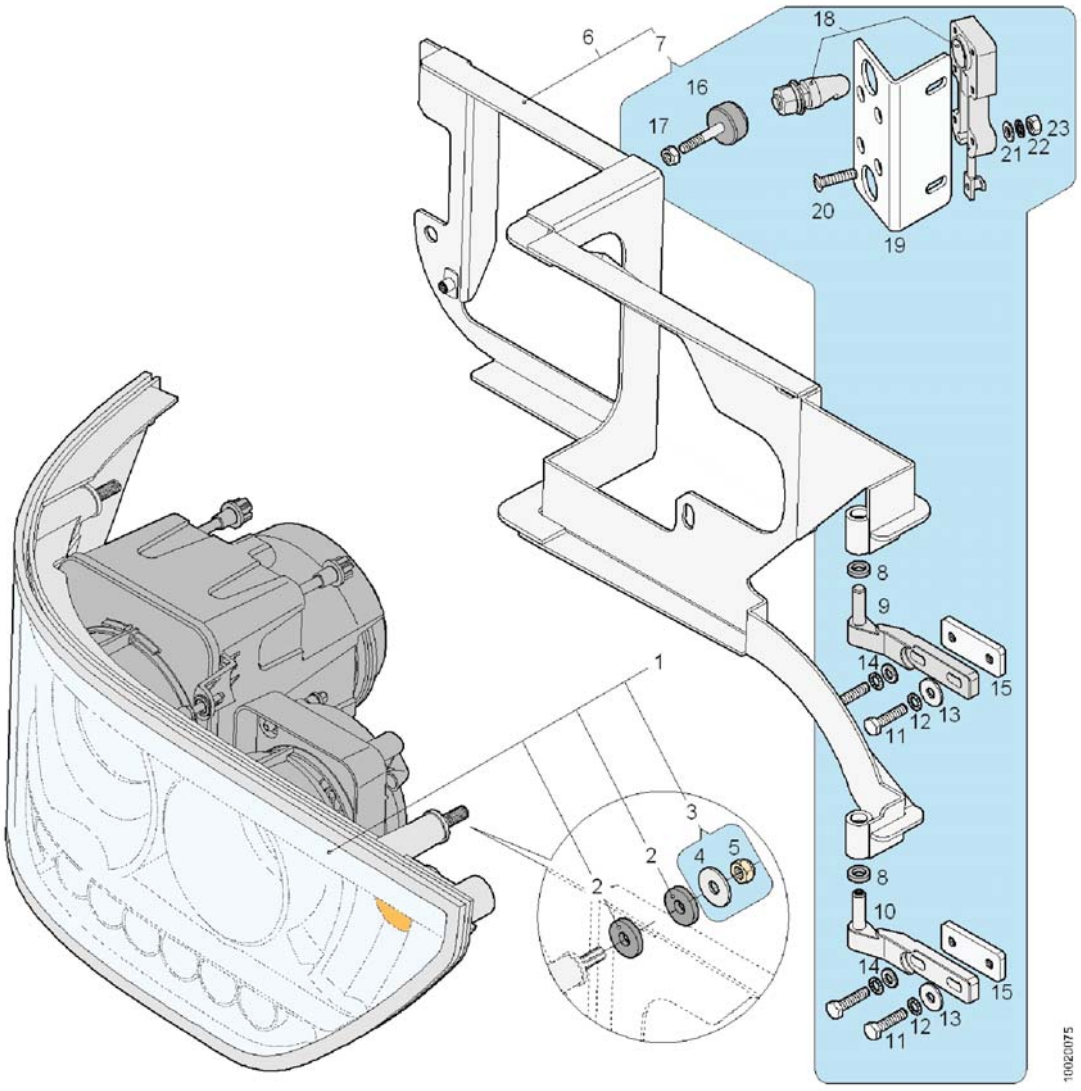

Pos.	Q.	Part n°	Description	Specification
18	**1	660171965	Lock	
19	**1	90301464	Mounting bracket	
20	**4	660283604	Screw	DIN 963 M6x25 MAT:IN
21	**4	660623507	Washer	DIN 125 6,4x12,5x1,6 MAT:IN
22	**4	660637605	Coil spring lock washer	DIN 6798 A6 MAT:IN
23	**4	660209922	Nut	DIN 934 M6x1 MAT:IN

Headlights: unlocking mechanism (Re)

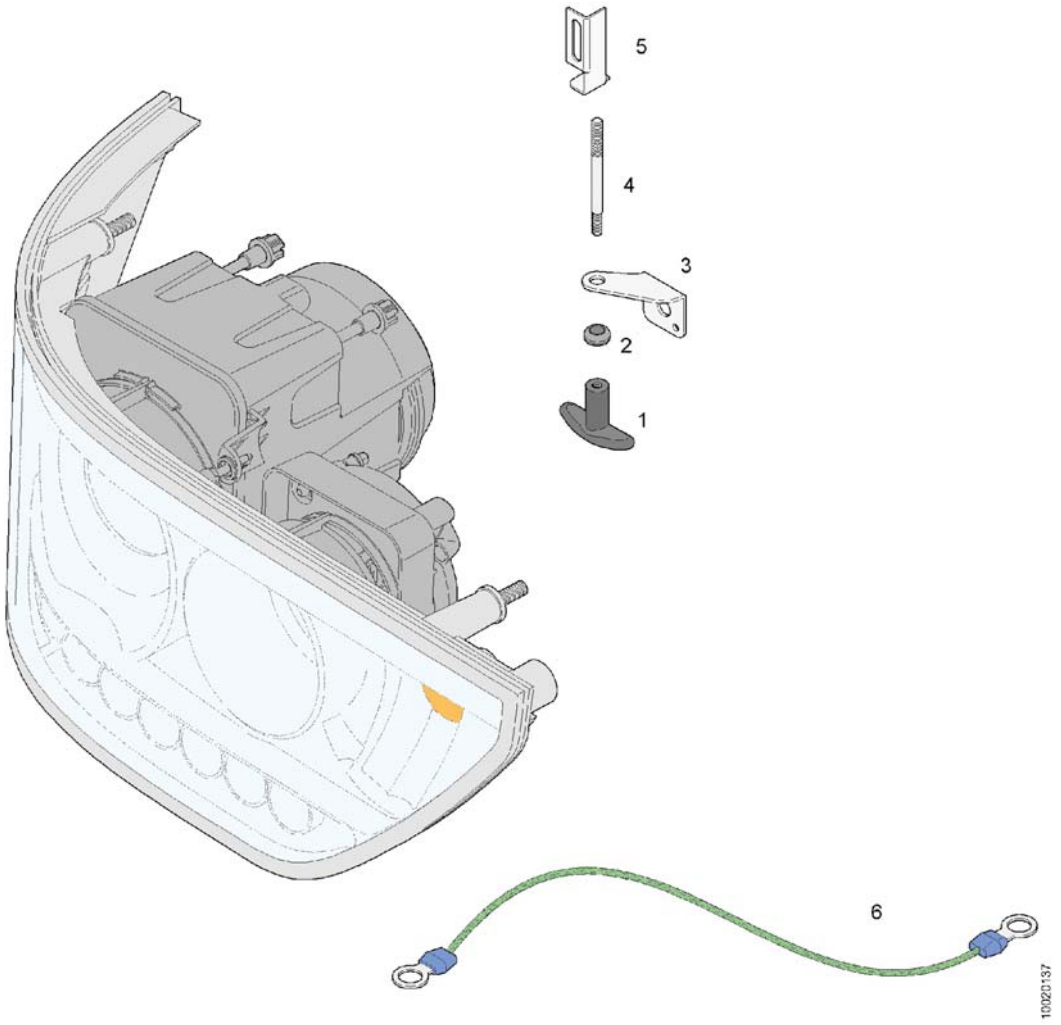

Pos.	Q.	Part n°	Description	Specification
1	1	10596265	Grab handle	M5 (Z) MAT:P
2	1	660779142	Grommet	MAT:P Ø8
3	1	91100812	Slide	MAT: IN
4	1	91100635	Rod	
5	1	10704783	Fastener	
6	1	11302447	Cord	

Headlights

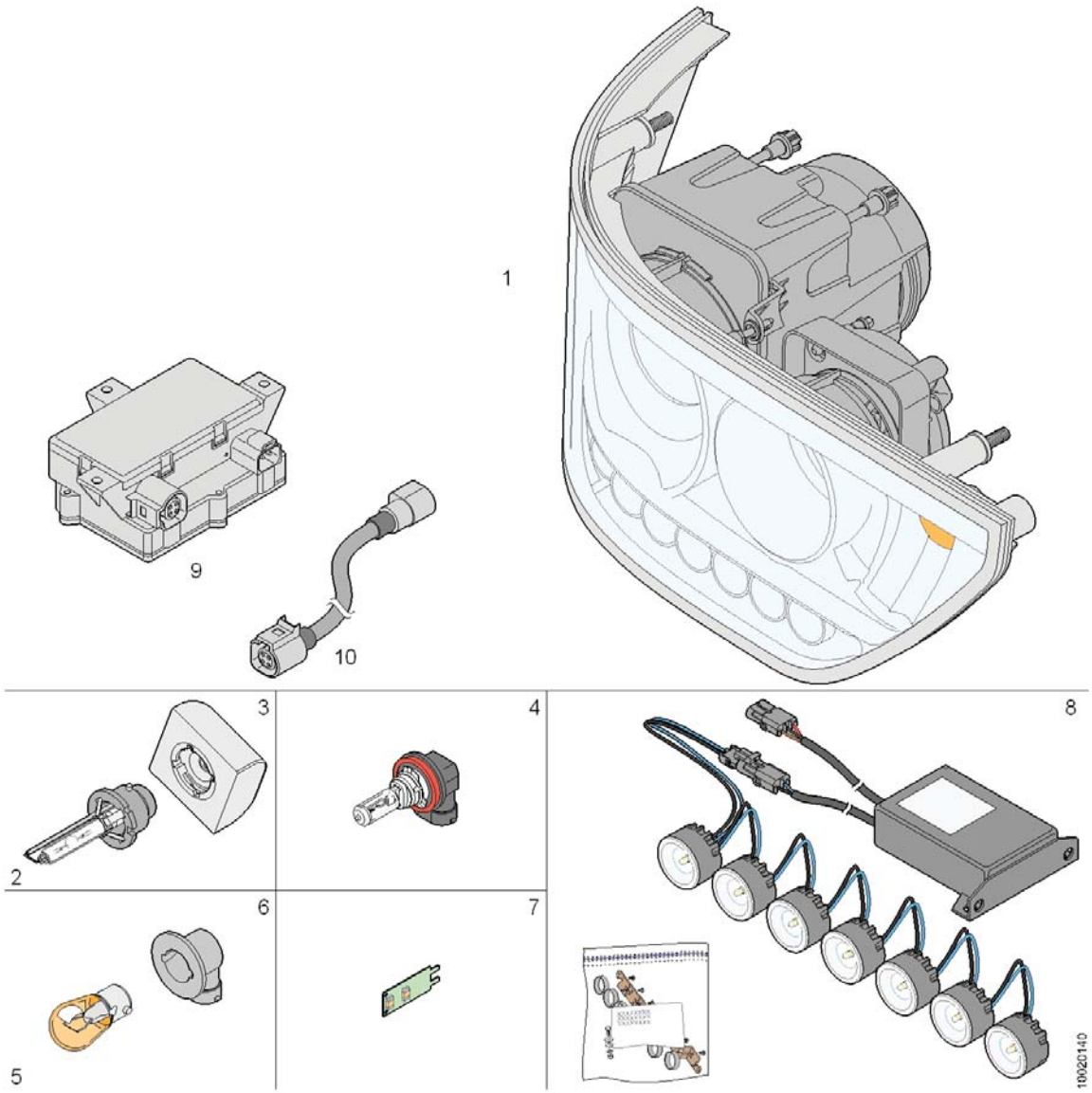

Pos.	Q.	Ref.N°	Description	Spec.
1	1	11325583	Headlight	Re (USA)
2	*1	10798547	Lamp	Xenon 12/24V-35W
3	*1	11294758	Ignition	
4	*1	11387072	Lamp bulb	H11 12V/55W
5	*1	11294763	Lamp bulb	24V 21W
6	*1	11294754	Lamp socket	
7	*1	11294753	Clearance lamp	
8	*1	11294746	Daylight running lamps + assembly parts	Re
		-		
9	1	11348986	Electronic control unit	Xenon 12V
10	1	11283378	Cable	

Fog /cornering lamp

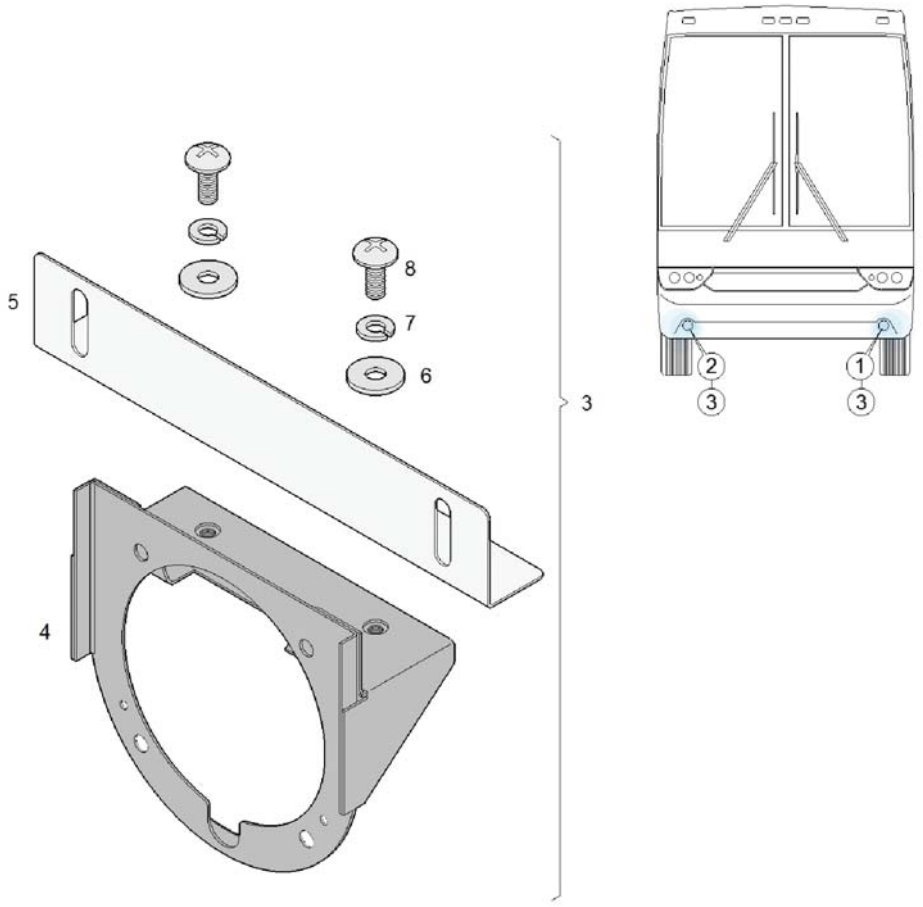

Bulb Replacement - H7, 70w, 24v. DOT/SAE
P/N: 11091282 or
P/N: N8893760 (Hella P/N: H83145001)

Pos.	Q.	Part n°	Description	Specification
1	1	11017006	Fog /cornering lamp	Li
2	1	11017007	Fog /cornering lamp	Re
		-		
3	2	11380992	Set of assembly parts	
4	*1	11380952	Mounting bracket	
5	*1	11380917	Bracket	
6	*2	660623508	Washer	DIN 9021 M6 MAT:IN
7	*2	660636302	Coil spring lock washer	DIN 127 A6 MAT:IN
8	*2	660200511	Screw	M6x15 MAT:IN

Identification lights

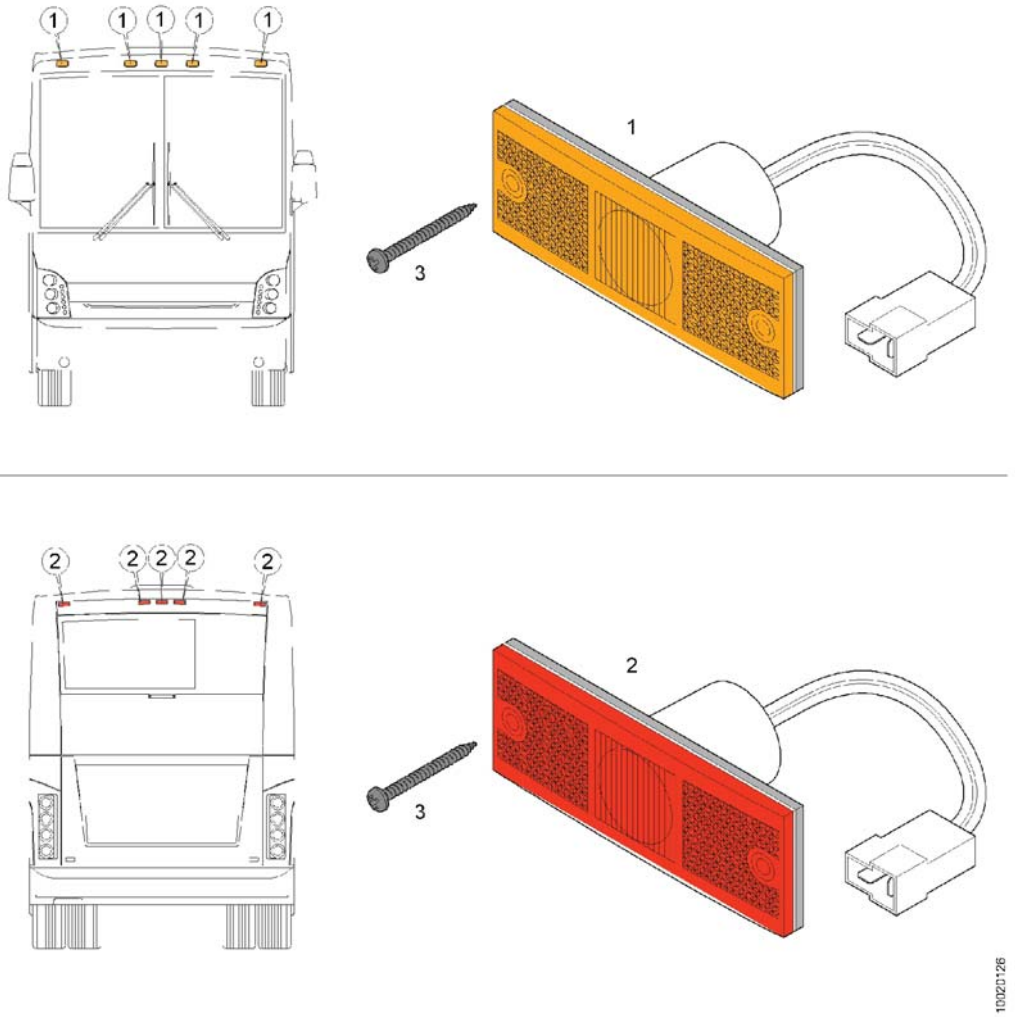

Pos.	Q.	Part n°	Description	Specification
1	5	10757389	Recessed light	(O) 24V
2	5	10757391	Recessed light	(R) 24V
3	20	660270803	Screw	DIN 7981 3,5 X 1 1/2"

Side lights

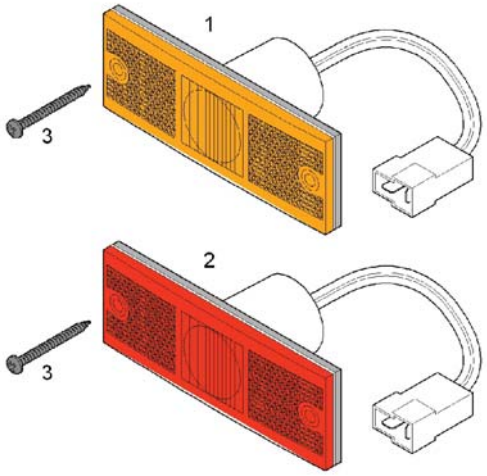

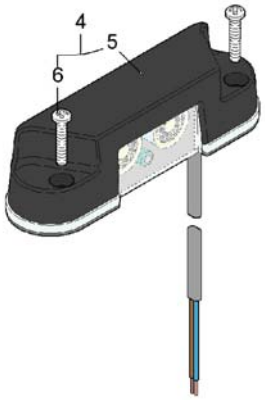

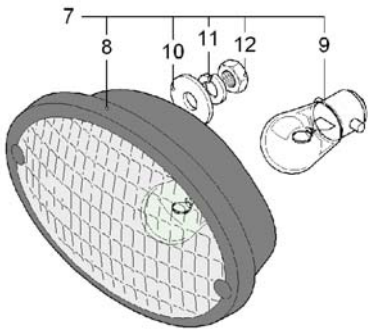

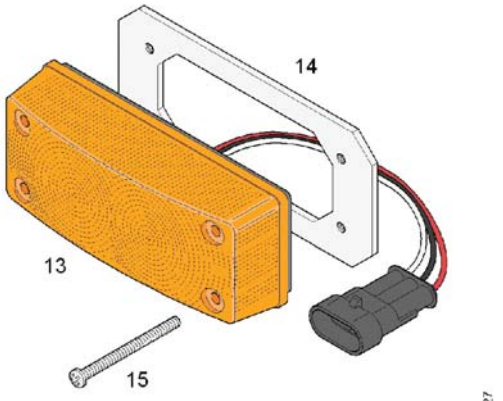

10026127

Pos.	Q.	Part n°	Description	Specification
1	4	10757389	Recessed light	(O) 24V
2	2	10757391	Recessed light	(R) 24V
3	12	660270803	Screw	DIN 7981 3,5 X 1 1/2"
4	3	11080045	Surface mounted light	LED
5	*1	11359257	Surface mounted light	(W) LED 12/24V
6	*2	10564658	Screw	DIN 7985 M4x20 MAT:IN
7	4	11006090	Light	
8	*1	10985542	Recessed light	(W)
9	*1	660720501	Lamp bulb	24V-21W
10	*2	660623508	Washer	DIN 9021 M6 MAT:IN
11	*2	660636302	Coil spring lock washer	DIN 127 A6 MAT:IN
12	*2	660209922	Nut	DIN 934 M6x1 MAT:IN
13	6	11288656	Turn-signal lamp	(O)
14	2	90620401	Mounting plate	MAT: IN
15	8	10785811	Screw	DIN 7985 M4x0,70x50mm MAT: IN

Rear position lamps

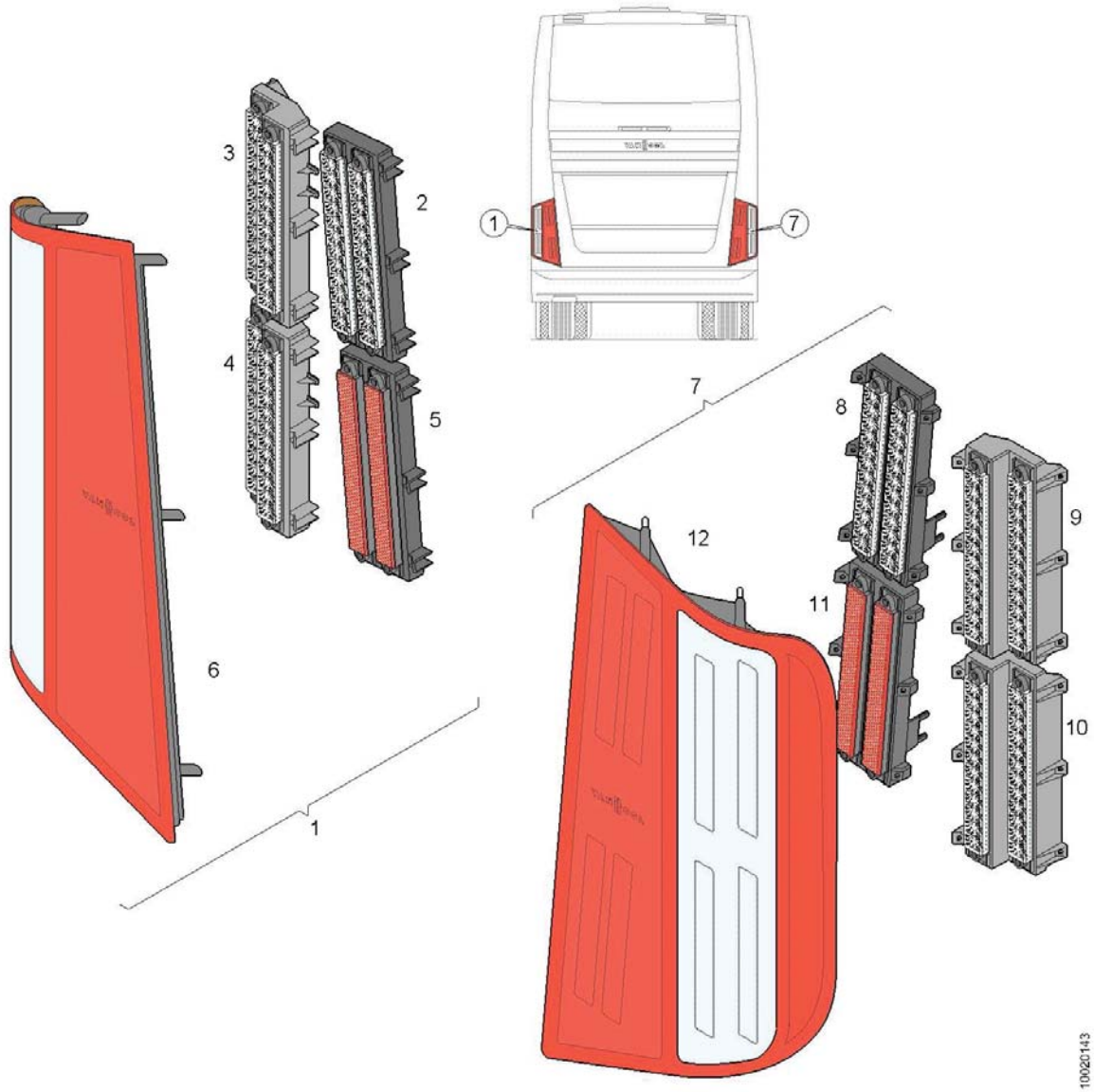

Pos.	Q.	Ref.N°	Description	Spec.
1	1	11271082	Rear position lamp	Li
2	*1	11321950	Stop lamp	
3	*1	11321941	Direction indicator	
4	*1	11321947	Back up light	
5	*1	11404002	Reflectors	
6	*1	11290629	Housing	Li
		-		
7	1	11271083	Rear position lamp	Re
8	*1	11321956	Stop lamp	
9	*1	11321951	Direction indicator	
10	*1	11321952	Back up light	
11	*1	11404010	Reflectors	
12	*1	11290648	Housing	Re

Extra stop lamp

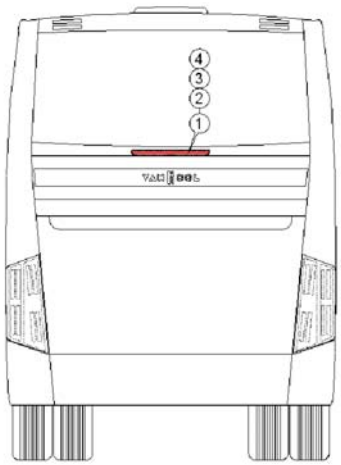

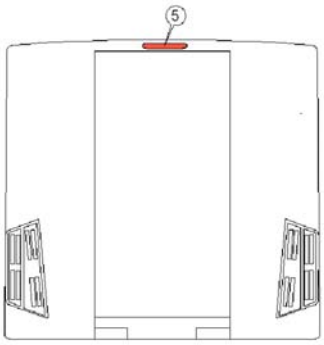

10020089

Pos.	Q.	Part n°	Description	Specification
1	1	11264186	Extra stop lamp	
2	*2	11290658	Stop lamp	
3	*1	11290655	Housing	
4	*1	11290657	Gasket	
		-		
5	1	11150235	Stop lamp	

Number plate light

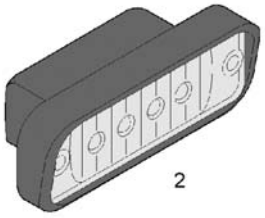

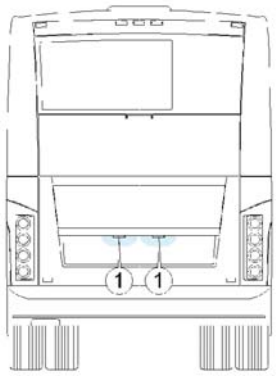

10020130

Pos.	Q.	Part n°	Description	Specification
1	2	11315281	Recessed light, with wiring harness	(W) LED
2	*1	11127600	Recessed light	(W) LED

Headlight cleaning system

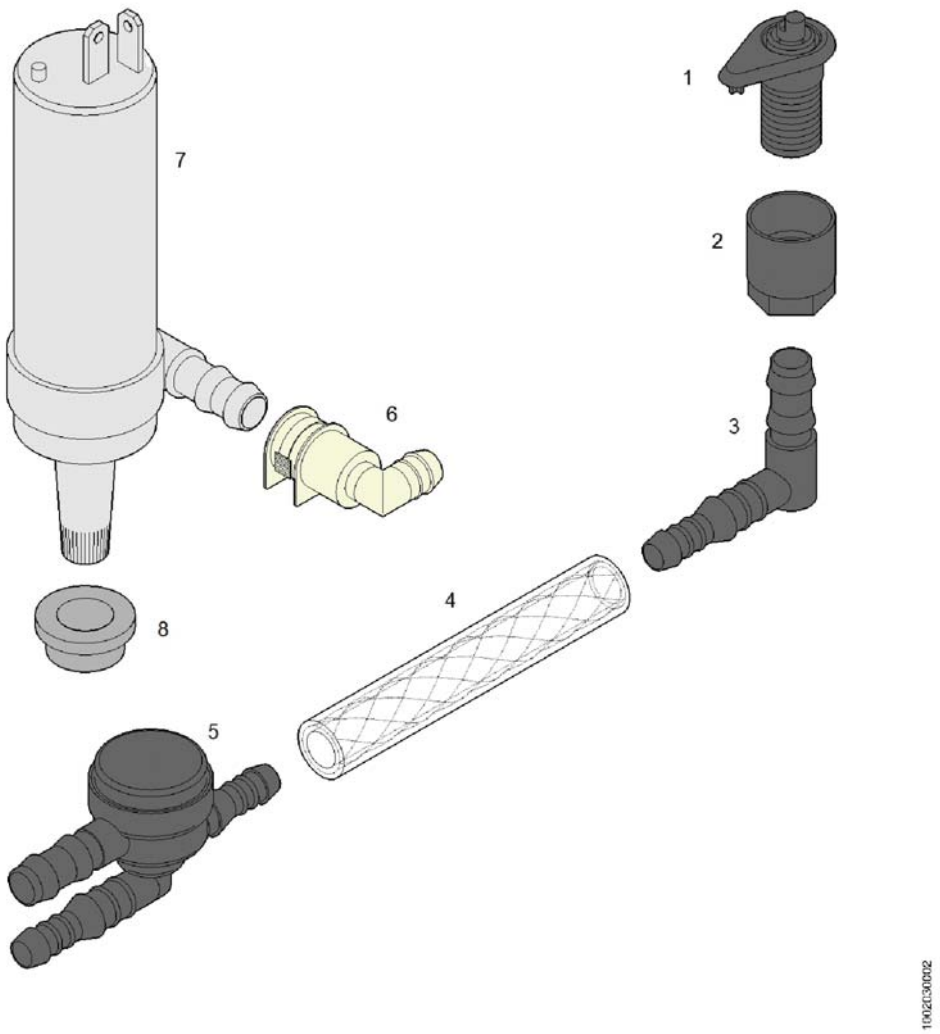

Pos.	Q.	Part n°	Description	Specification
1	2	11378033	Nozzle	
2	2	11169783	Nut	MAT: P (Z)
3	2	11378026	Coupling	90°
4	#m	660091003	Hose	Ø10x3 MAT:P
5	1	11378027	Valve	
6	1	10879865	Coupling	
7	1	10879863	Pump	
8	1	10879864	Seal	

Reflectors

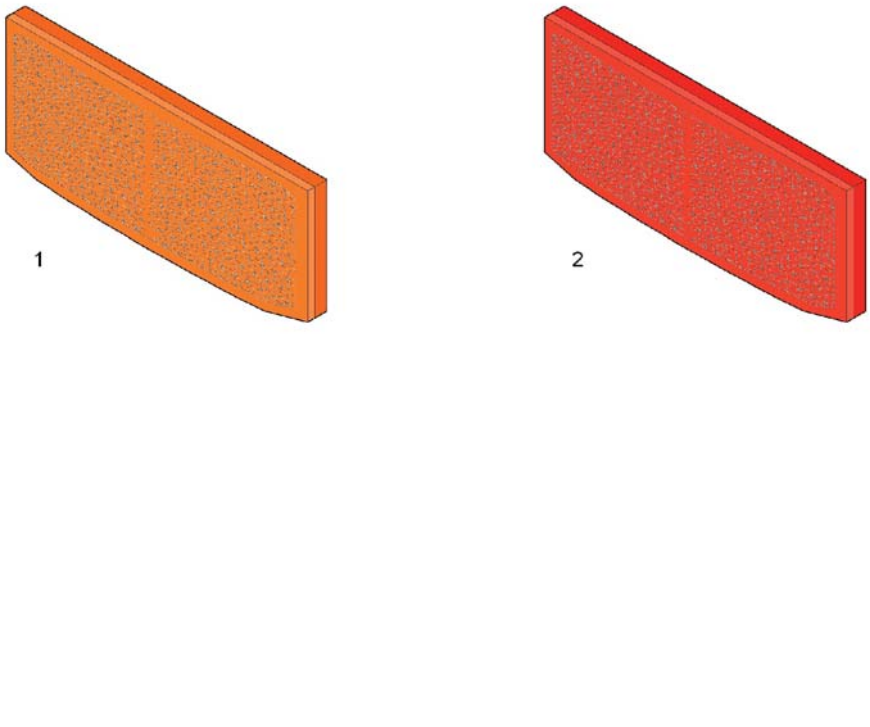

Pos.	Q.	Part n°	Description	Specification
1	6	774405401	Reflector, self-adhesive	(O)
2	4	10712104	Reflector, self-adhesive	(R)

Acoustic signals

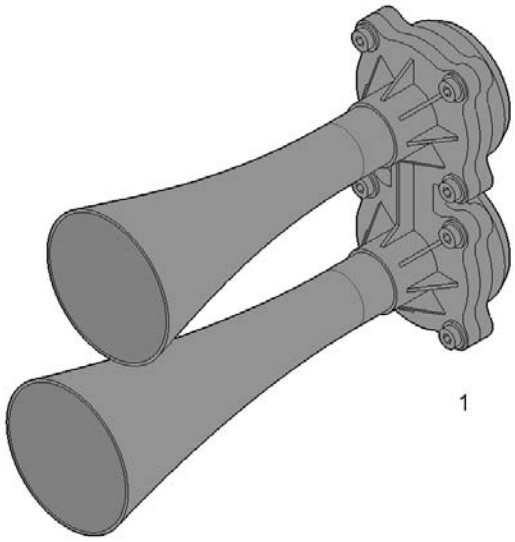

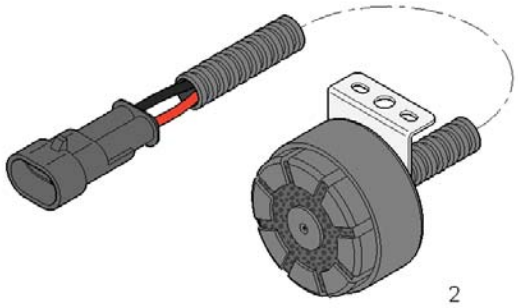

10020142

Pos.	Q.	Ref.N°	Description	Spec.
1	1	637209170	Air horn	
		-		
2	1	11116547	Back up warning	
	*1	10907894	Buzzer	

Lighting armature

Pos.	Q.	Part n°	Description	Specification
1	1	11195350	LED Lighting	

Lighting armature

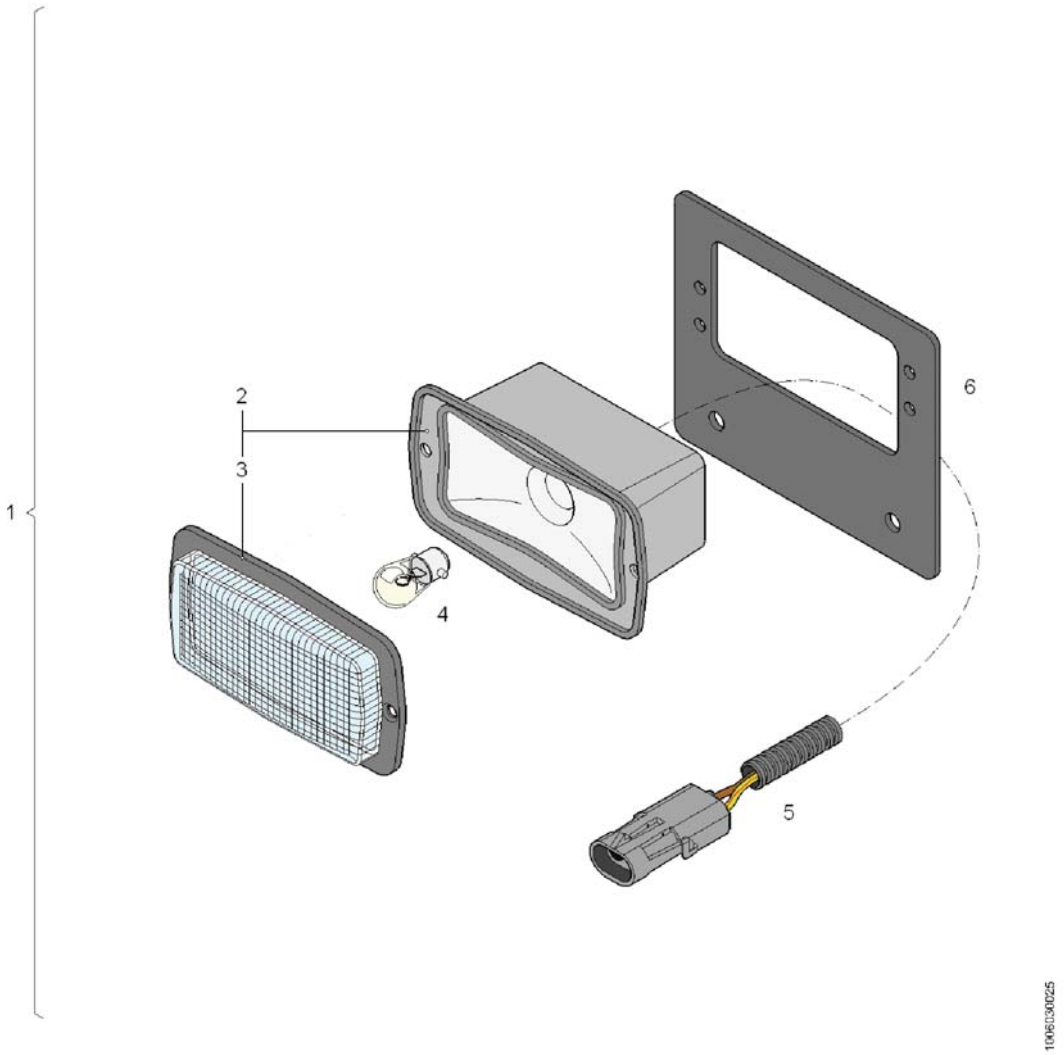

Pos.	Q.	Part n°	Description	Specification
1	1	11167152	Lighting armature	
		-		
2	*1	10791995	Lighting armature	(W)
3	**2	660734708	Lens	(W)
4	*1	660720400	Lamp bulb	24V-15W
5	*1	11167267	Wiring harness	
6	*1	10523041	Mounting plate	(RAL 9005)

LED Lighting

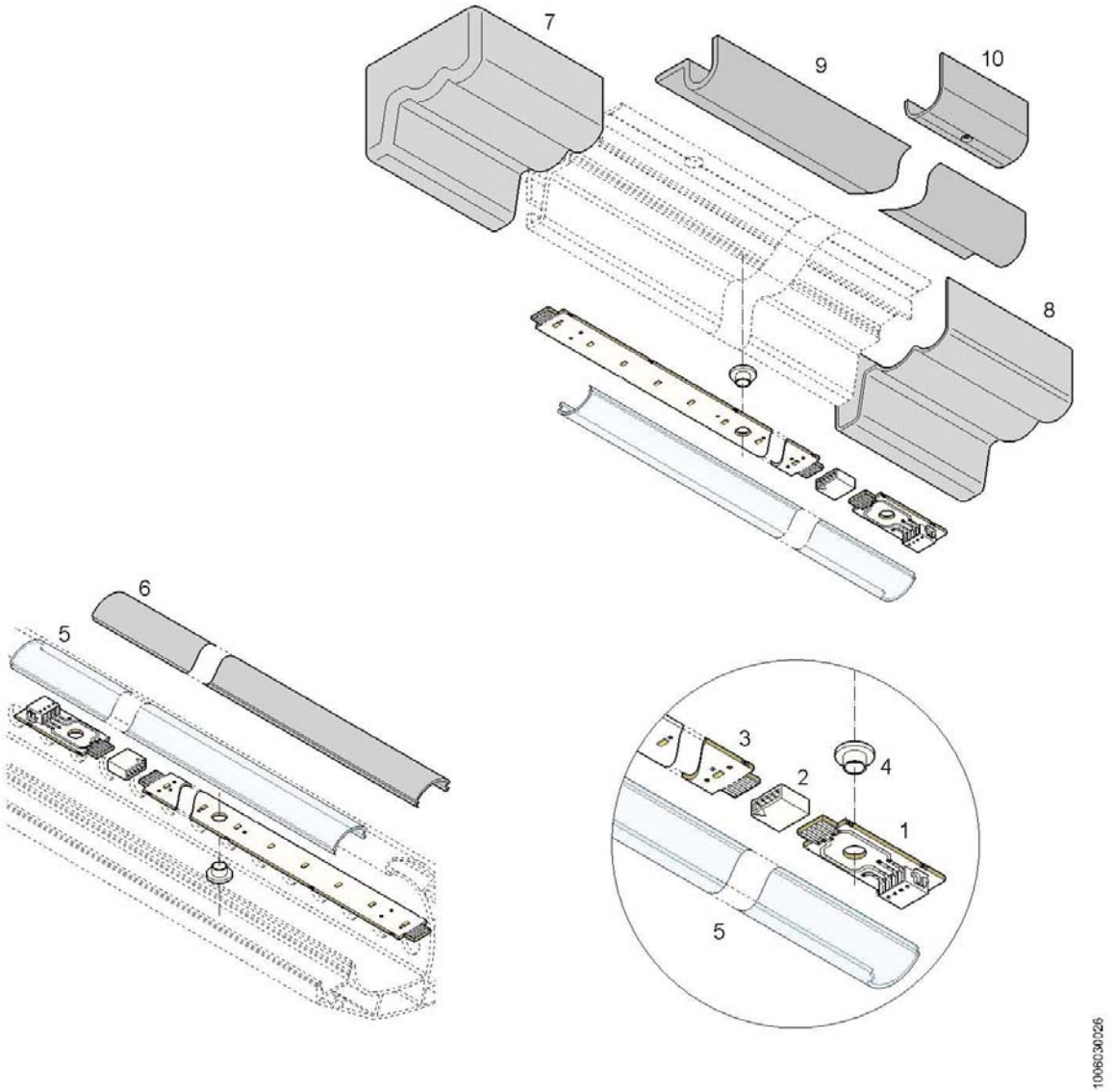

Pos.	Q.	Ref.N°	Description	Spec.
1	#	11355926	Supply wire connector	
2	#	11355929	Connector	5P
3	#	11355924	LED Lighting strip	24V/DC l.=600mm
4	#	11323983	Insulator	MAT: NYLON
		-		
5	#	11270863	Section synthetic material	l.=6m [T]
6	#	11270868	Section synthetic material	l.=6m [RAL7001]
		-		
7	#	11285624	End part	MAT: ABS [RAL7001]
8	#	11285629	End part	[RAL7001] MAT/ ABS
9	#	11302273	Section synthetic material	[RAL7001] MAT: PVC
10	#	11312168	Protection shield	[RAL7001] MAT: ABS

Windshield wipers

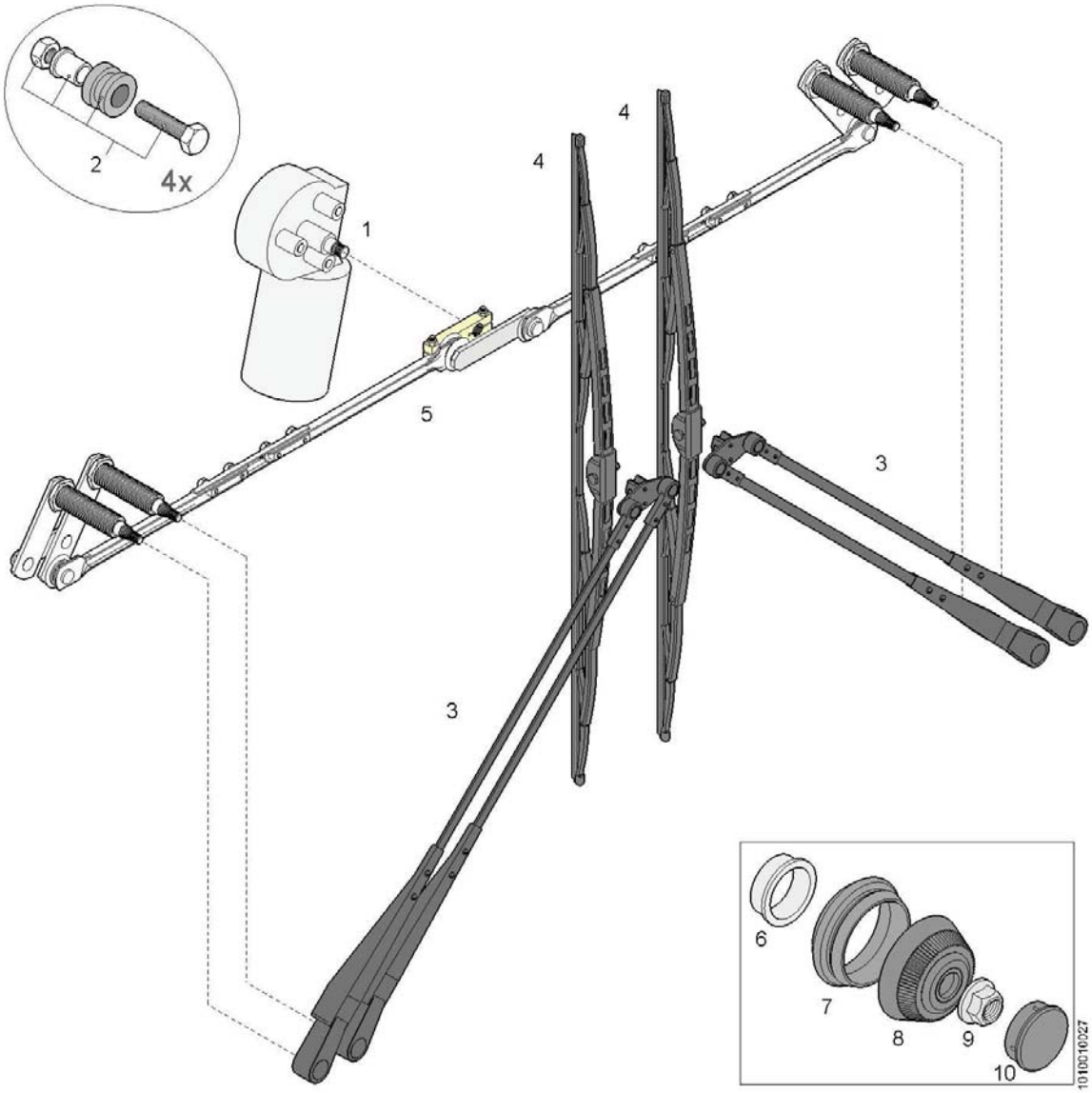

Pos.	Q.	Ref.N°	Description	Spec.
1	1	11025971	Motor	24V
2	1	10916798	Set of assembly parts motor	
3	2	10951137	Wiper arm	
4	2	10916804	Wiper blade	l.=1000mm
5	1	11304057 »1010.01-2008	Actuating linkage	
6	4	645802770	Bush	Ø26mm
7	4	11027199	Cap	MAT: R
8	4	11027201	Cap	MAT: P
9	4	10869159	Lock nut	DIN 6927 M10 k.=8
10	4	10994664	Cap	

Actuating linkage

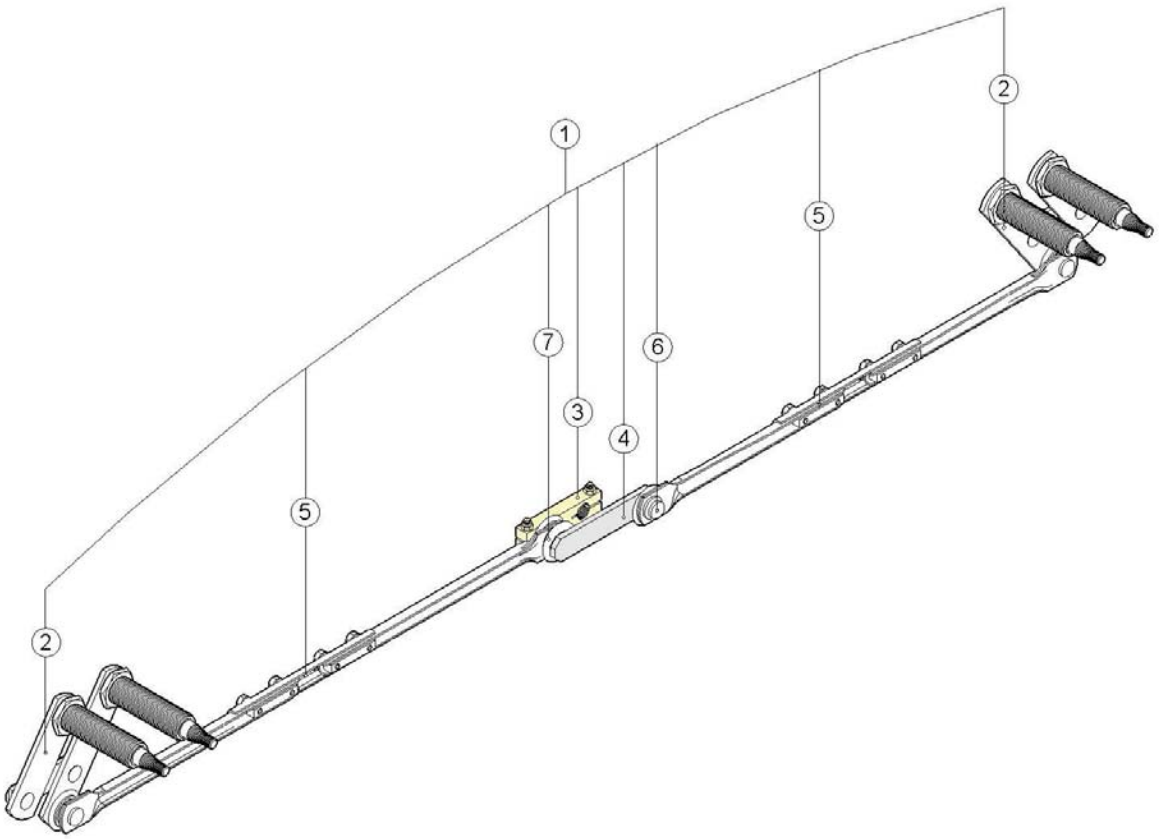

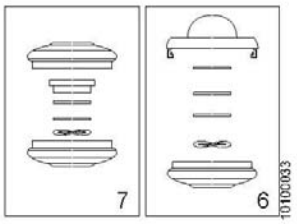

Pos.	Q.	Ref.N°	Description	Spec.
1	1	11304057	Actuating linkage	
		-		
2	*2	10952737	Lever	
3	*1	11304059	Lever	
4	*1	11304243	Lever	
5	*2	10957499	Rod	
6	*3	10952746	Set of assembly parts	
7	*1	10952747	Set of assembly parts	

Windscreen washers

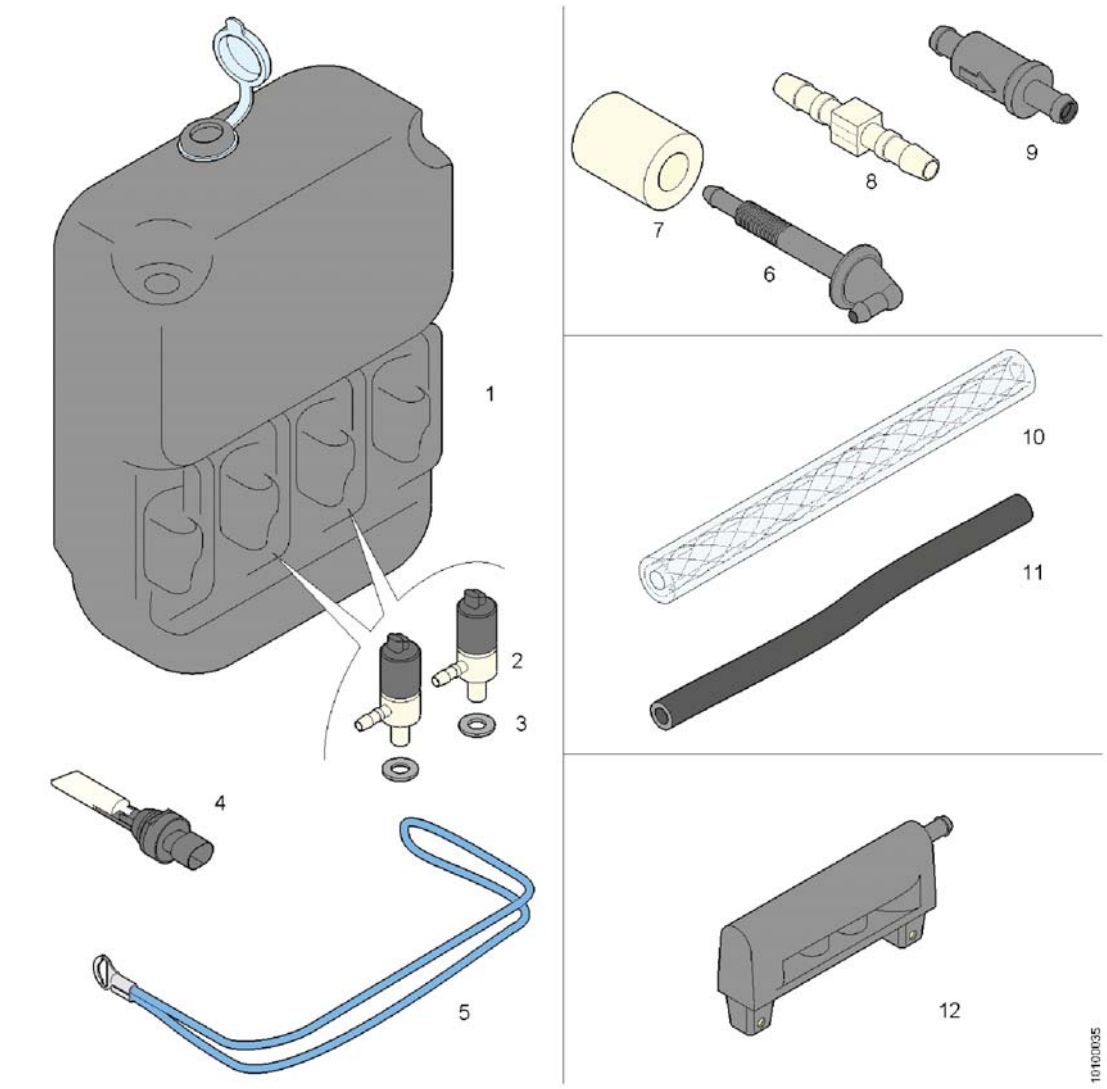

Pos.	Q.	Part n°	Description	Specification
1	1	10609213	Water tank	20 l
2	*2	660758633	Water pump	
3	*2	660758634	Seal	
4	1	10896113	Level switch	
5	1	660198607	Stretch band	l.=600mm
		-		
6	2	10916805	Connection	l.=83mm
7	2	660634733	Bush	Ø12,5xØ25x30
8	2	11004672	Coupling	Ø4mm
9	2	660759114	One-way valve	
		-		
10	#m	660090104	Hose	Ø4xØ10 (T) MAT:P
11	#m	660758632	Hose	Ø4xØ6 (Z) MAT:R
		-		
12	2	11184217	Windscreen washer	

Loudspeaker complete

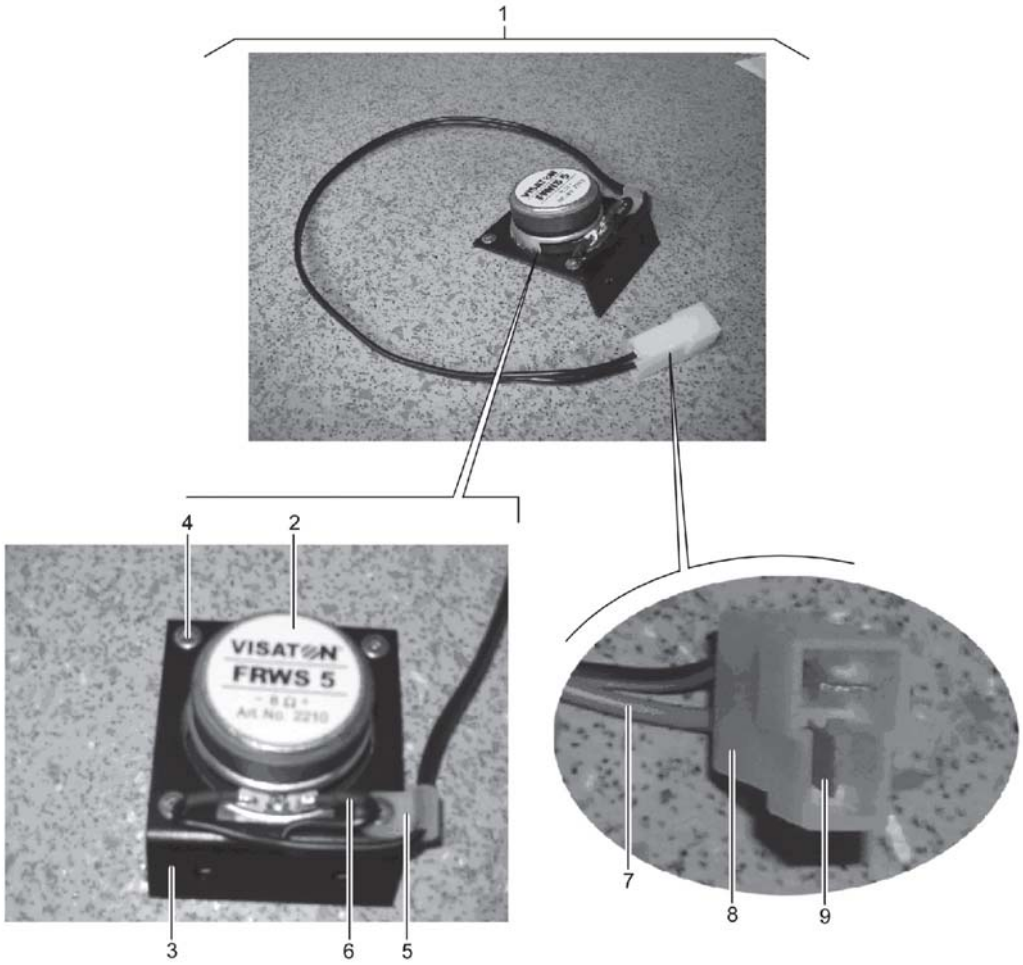

Pos.	Q.	Part n°	Description	Specification
1	1	10887335	Loudspeaker complete	
2	*1	10883294	Loudspeaker	8R
3	*1	10887413	Mounting plate	(RAL 9005)
4	*4	660611106	Rivet	Ø3,2x7,9
5	*1	660767001	Cable binder	
6	*#m	660777438	Cable hose	
7	*#m	660785120	Cable	2x0,75
8	*1	660768404	Plug	2PM
9	*2	660765191	Cable terminal	1,5-2,5mm²

Camera

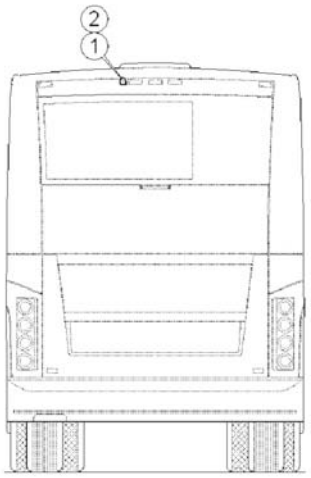

1021052009

Pos.	Q.	Part n°	Description	Specification
1	1	11367855	Camera	
2	1	11367890	Cable	l.=22m

Passenger information system

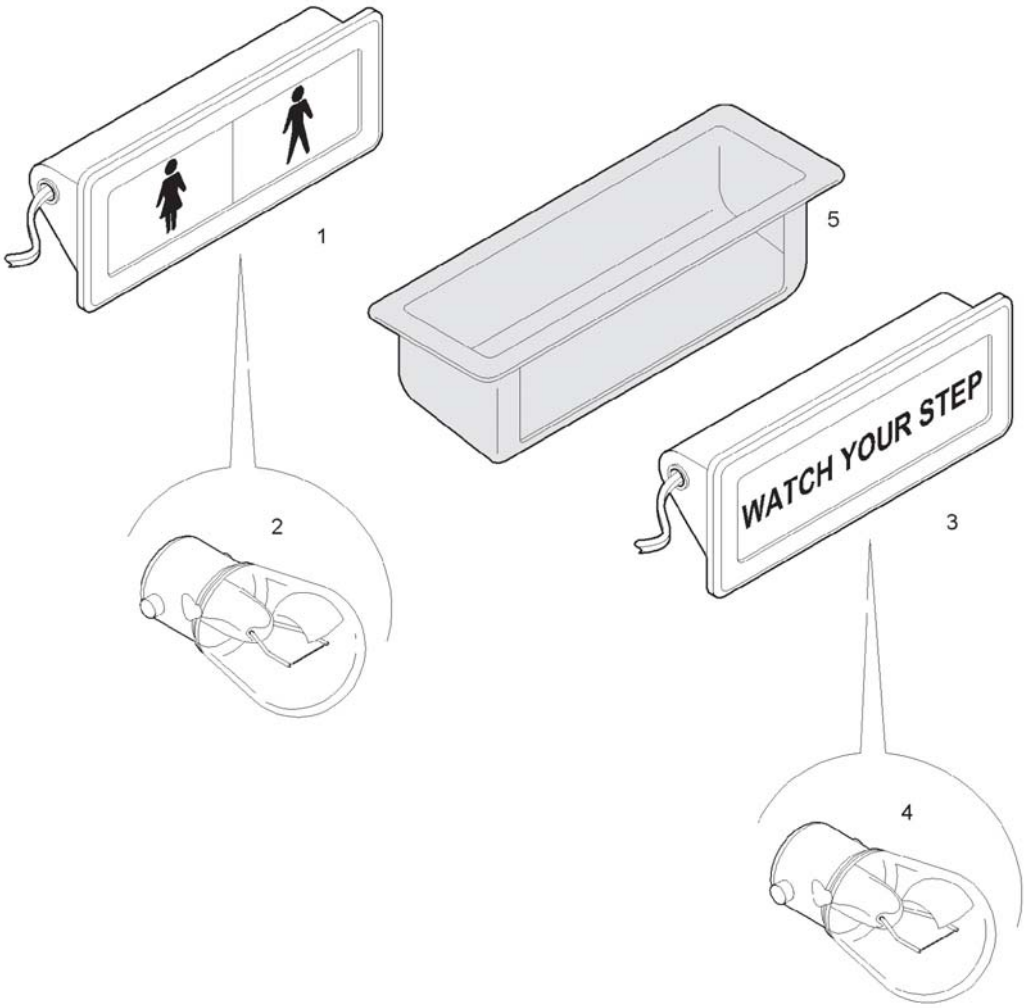

Pos.	Q.	Part n°	Description	Specification
1	1	10554243	Indicator	
2	*1	10958033	Lamp bulb	24V-10W
3	1	10589156	Indicator	'WATCH YOUR STEP'
4	*1	10958033	Lamp bulb	24V-10W
5	#	10676468	Holder	MAT:P

2008 PO-tf 13106360 EO 65005

Part No	G	Description	un	Ask.	Unit.pr	
11071113	C	SUSP. PROFILE	PCE	1	88.16 USD	
11071114	C	SUSP. PROFILE	PCE	1	88.16 USD	
11260212	C	EM WINDOW 2052X1062MM	PCE	1	856.38 USD	
11260223	V	SIDE WINDOW	PCE	1	342.98 USD	- 3 pc dl 15/10
11260225	V	SIDE WINDOW	PCE	1	342.98 USD	- 3 pc dl 15/10
11260226	C	SUSP. PROFILE	PCE	1	120.66 USD	
11260228	C	SUSP. PROFILE	PCE	1	120.66 USD	
11279905	V	DOOR WINDOW	PCE	1	240.41 USD	
11333577	V	WINDSHIELD LH 1260X1913MM	PCE	1	427.48 USD	> 5pc cout 22/10
11333578	V	WINSHIELD RH 1260X1913MM	PCE	1	427.48 USD	
11342924	V	DRIVER WINDOW	PCE	1	386.26 USD	- 3 pc dl } 15/10
11342926	V	SIDE WINDOW	PCE	1	171.28 USD	- 3 pc dl } 15/10
11342927	V	SIDE WINDOW	PCE	1	175.59 USD	- 3 pc dl } 15/10
11342928	V	SIDE WINDOW	PCE	1	523.78 USD	
11342930	V	SIDE WINDOW	PCE	1	523.78 USD	
11342938	V	SIDE WINDOW	PCE	1	54.50 USD	
11342952	V	SIDE WINDOW	PCE	1	54.50 USD	
11343384	V	DOOR WINDOW	PCE	1	142.80 USD	
11364860	V	SIDE WINDOW	PCE	1	176.29 USD	- 3 pc dl 15/10
11364883	C	SUSPENSION PROFILE	PCE	1	92.42 USD	
11365383	V	WINDOW	PCE	1	1,183.40 USD	
11367248	C	SUSPENSION PROFILE	PCE	1	74.43 USD	
11374577	V	REAR WINDOW	PCE	1	457.08 USD	- 3 pc dl 15/10

TX USA

Windscreen and rear window

Shade that goes across both windshields
PN 11380566

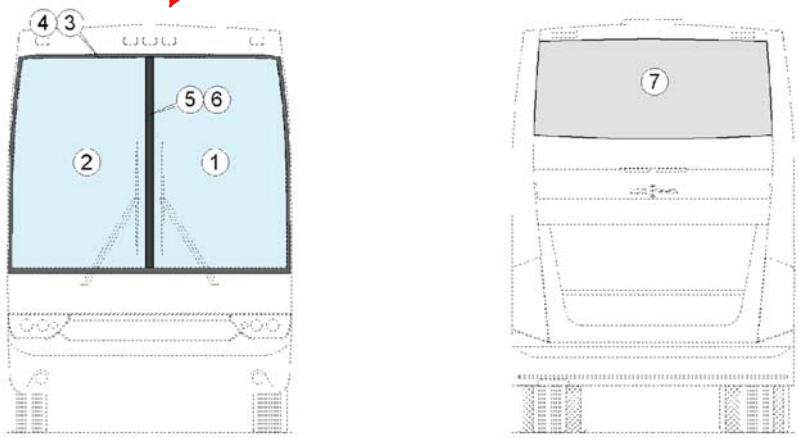

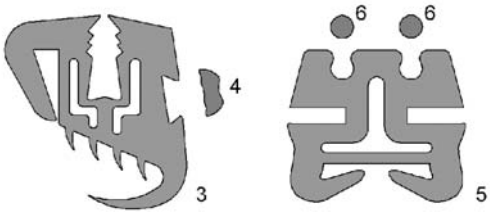

10340244

Pos.	Q.	Part n°	Description	Specification
1	1	11333577	Windscreen with masking film	Li (T)
2	1	11333578	Windscreen with masking film	Re (T)
3	1	11368790	Rubber section	
4	#m	660050408	Locking strip	
5	1	11355015	Rubber section	l.=1950mm
6	#m	660053600	Locking strip	Ø7mm
		-		
7	1	11374577	Rear window	(GS-Venus)

Side windows (40')

40' - vehicle

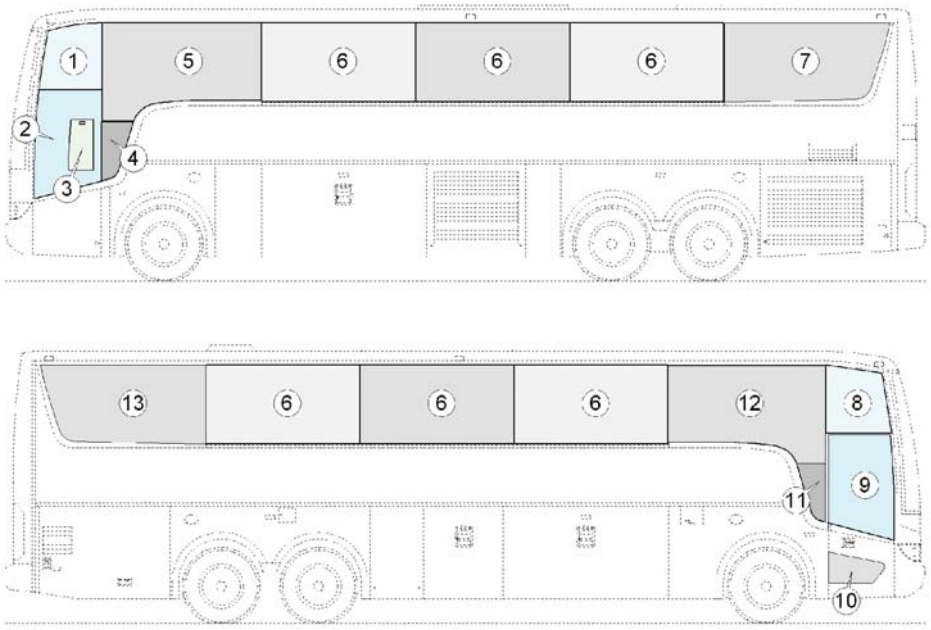

10340245

Pos.	Q.	Part n°	Description	Specification
1	1	11342926	Window, double glazing	(GS-Venus 40)
2	1	11342924	Window, double glazing	(T)
3	1	11091758	Sliding window, with accessories	(GN) EV
4	1	11342938	Window, single glazing, with masking	(T)
5	1	11342928	Window, double glazing	(GS-Venus 40)
6	6	11260212	Emergency exit window, double glazing,	(GS-Venus 40)
7	1	11260322	Window, double glazing	(GS-Venus 40)
8	1	11342927	Window, double glazing	(GS-Venus 40)
9	1	11279905	Window, double glazing	(T-T)
10	1	11343384	Window, double glazing	(GS-Venus 40)
11	1	11342952	Window, single glazing, with masking	(T)
12	1	11342930	Window, double glazing	(GS-Venus 40)
13	1	11260325	Window, double glazing with, masking	(GS-Venus 40)
		11081974	Cable, for Emergency exit window 11260212	

Side windows (45')

45' - vehicle

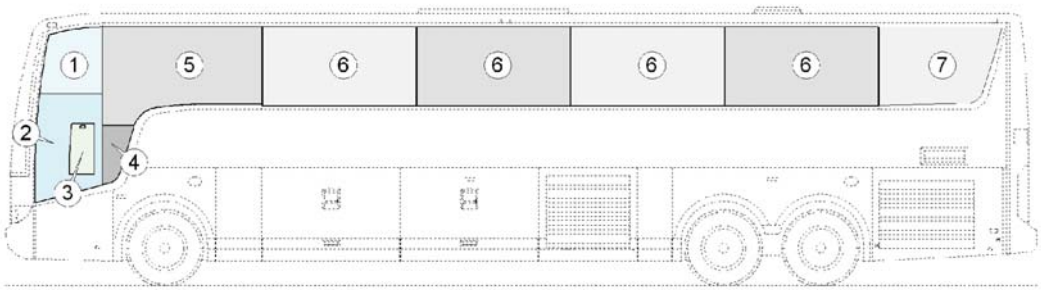

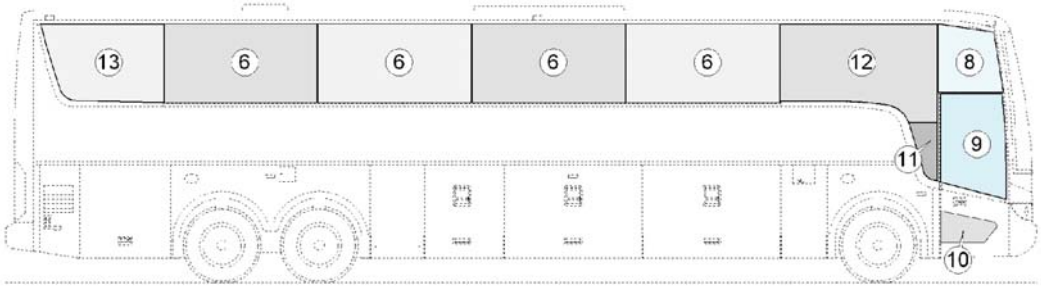

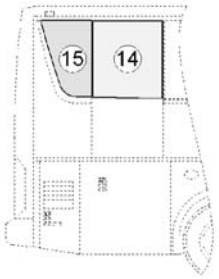

11364838 - Emergency Exit Window in front of wheelchair lift door when installed.
11421149 Cable for 11364838

10340246

Pos.	Q.	Part n°	Description	Specification
1	1	11342926	Window, double glazing	(GS-Venus 40)
2	1	11342924	Window, double glazing	(T)
3	1	11091758	Sliding window, with accessories	(GN) EV
4	1	11342938	Window, single glazing, with masking	(T)
5	1	11342928	Window, double glazing	(GS-Venus 40)
6	8	11260212	Emergency exit window, double glazing,	(GS-Venus 40)
7	1	11260265	Window, double glazing	(GS-Venus 40)
8	1	11342927	Window, double glazing	(GS-Venus 40)
9	1	11279905	Window, double glazing	(T-T)
10	1	11343384	Window, double glazing	(GS-Venus 40)
11	1	11342952	Window, single glazing, with masking	(T)
12	1	11342930	Window, double glazing	(GS-Venus 40)
13	1	11260268	Window, double glazing with, masking	(GS-Venus 40)
		-		
14	1	10880916	Window, double glazing	(GS-Venus 40)
15	1	11364859	Window, double glazing	(GS-Venus 40)
		11081974	Cable, for Emergency exit window 11260212	

Driver's window

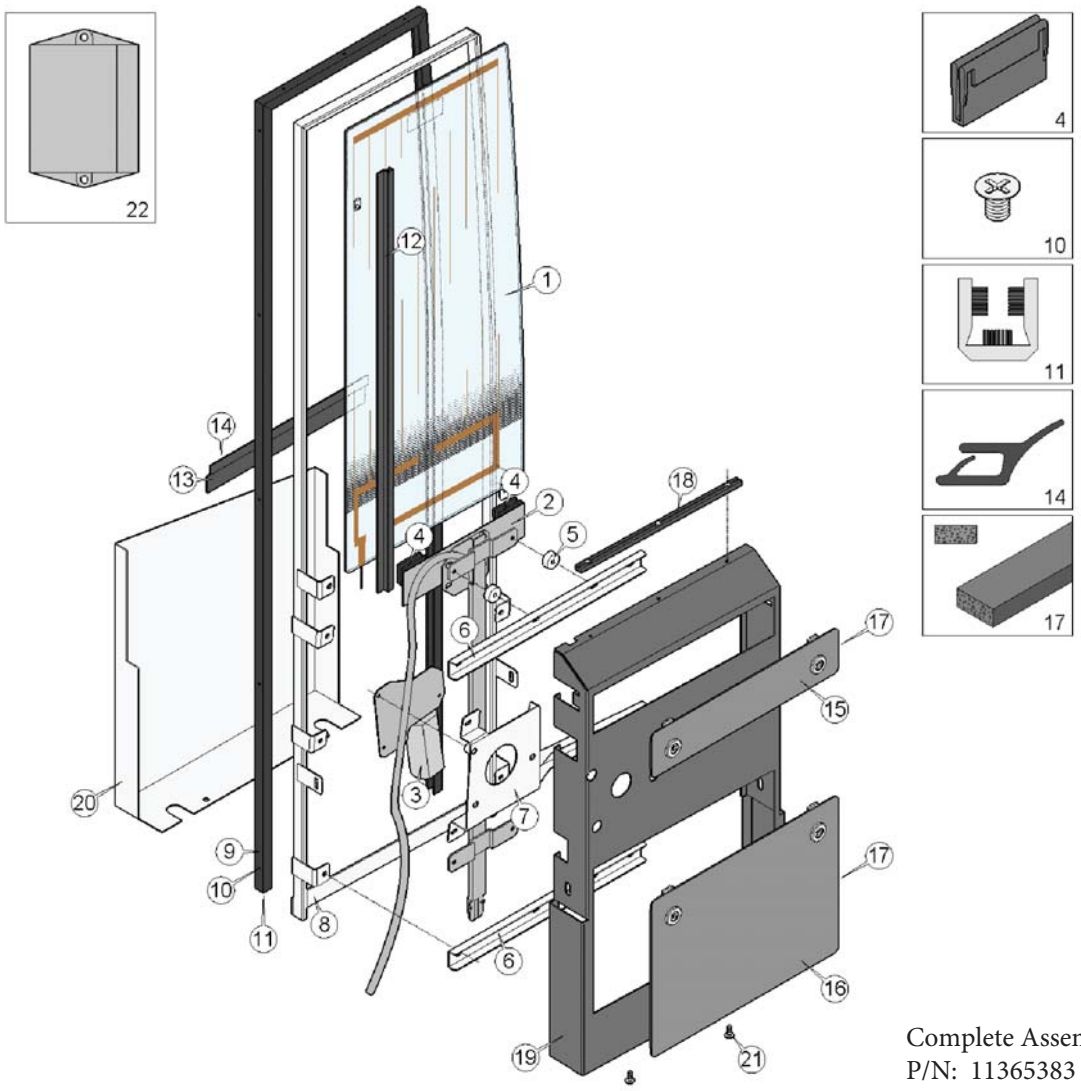

Complete Assembly
P/N: 11365383

Pos.	Q.	Part n°	Description	Specification
1	1	11091758	Sliding window, with accessories	(GN) EV
2	1	11363549	Drive mechanism	
3	*1	11361552	Motor	24V
4	*2	11396233	Fastener	MAT: R
5	2	91503054	Spacer disc	Ø25-Ø6,5 d.=10 mm MAT: Ertalon
6	2	91501804	Profile	MAT:IN
7	1	91503065	Mounting bracket	MAT: IN
8	1	91503044	Frame	
9	1	11007558	Casing	(RAL 9005)
10	15	10585998	Screw	DIN 965 M4x6 MAT:IN
11	#m	660053508	Profile	MAT:P
12	1	11020803	Slide	(RAL 9005) l.=750mm
13	1	11028066	Aluminium section	(RAL 9005)
14	#m	11009217	Rubber section	l.=1030mm
		-		
15	1	11377996	Maintenance lid	(RAL 9005)
16	1	11377994	Maintenance lid	(RAL 9005)
17	#m	660065100	Section synthetic material	7x3 l.=25m

Driver's window

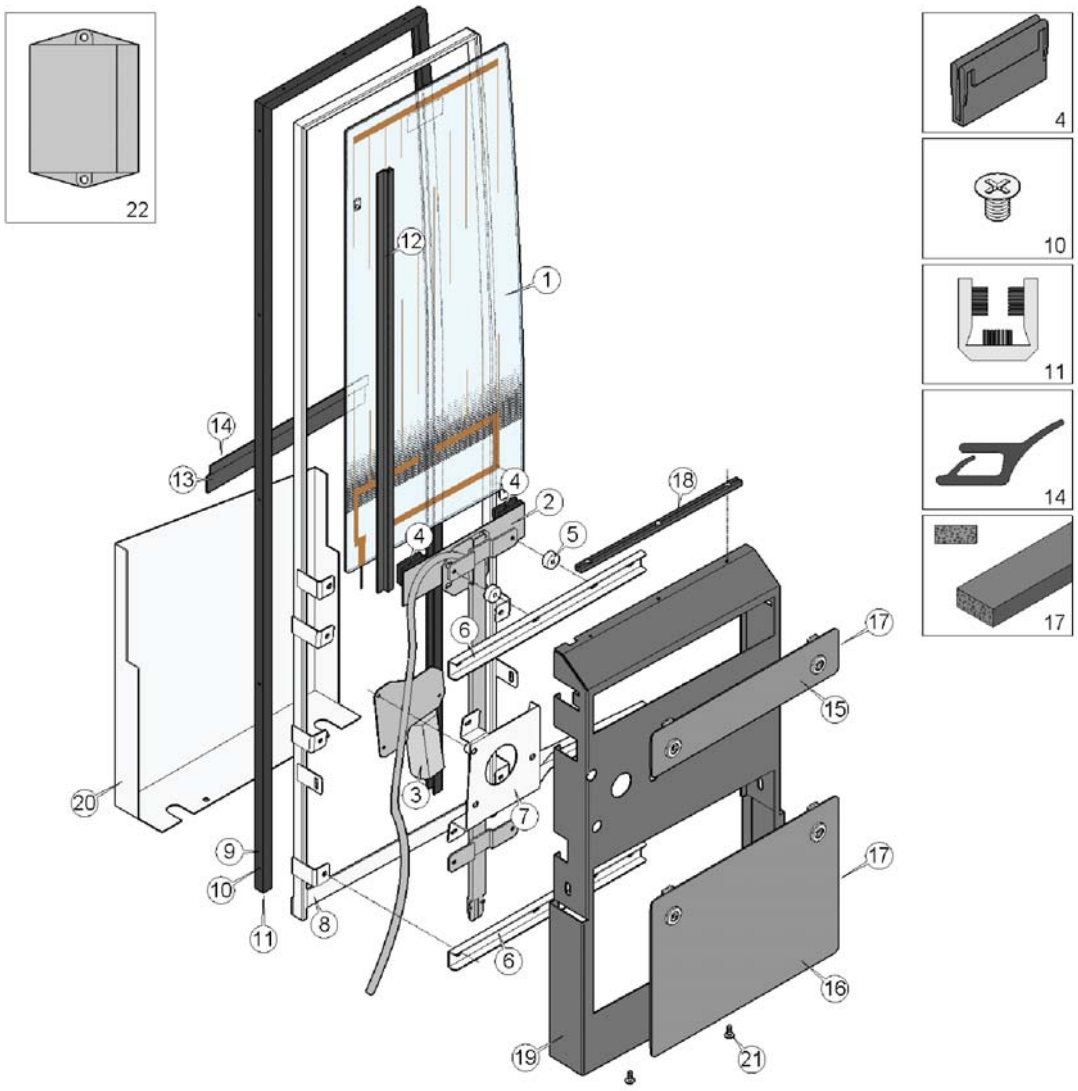

Pos.	Q.	Part n°	Description	Specification
18	1	11041436	Aluminium section	l.=315mm (RAL 9005)
19	1	11375557	Sheet	
20	1	11375706	Sheet	
21	2	660200511	Screw	M6x15 MAT:IN
		-		
22	1	10989054	Electronic control unit	

Exterior mirrors

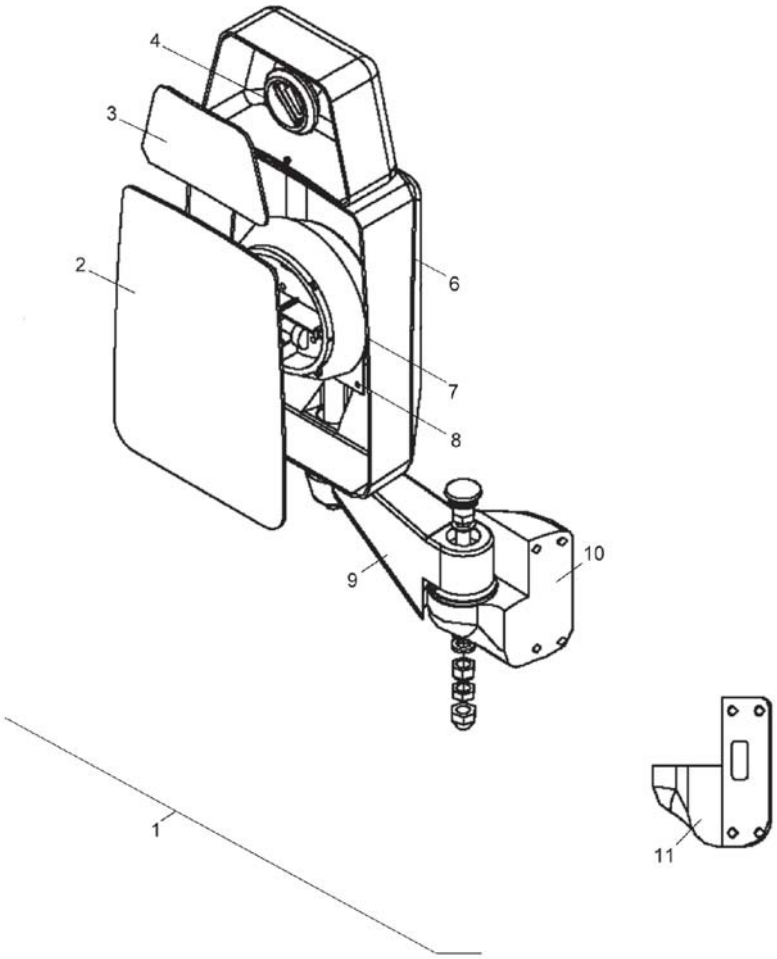

Pos.	Q.	Part n°	Description	Specification
1	1	10884512	Mirror, complete	Li (Black)
2	*1	10916567	Mirror glass	
3	*1	10916568	Mirror glass	
4	*1	10916569	Tilt adjust mechanism	
6	*1	11009939	Housing	
7	*1	10916572	Motor	
8	*1	10916573	Shaft	
9	*1	10916574	Mirror arm	
10	*1	11009949	Bracket	
11	*1	10710606	Gasket	

Exterior mirrors

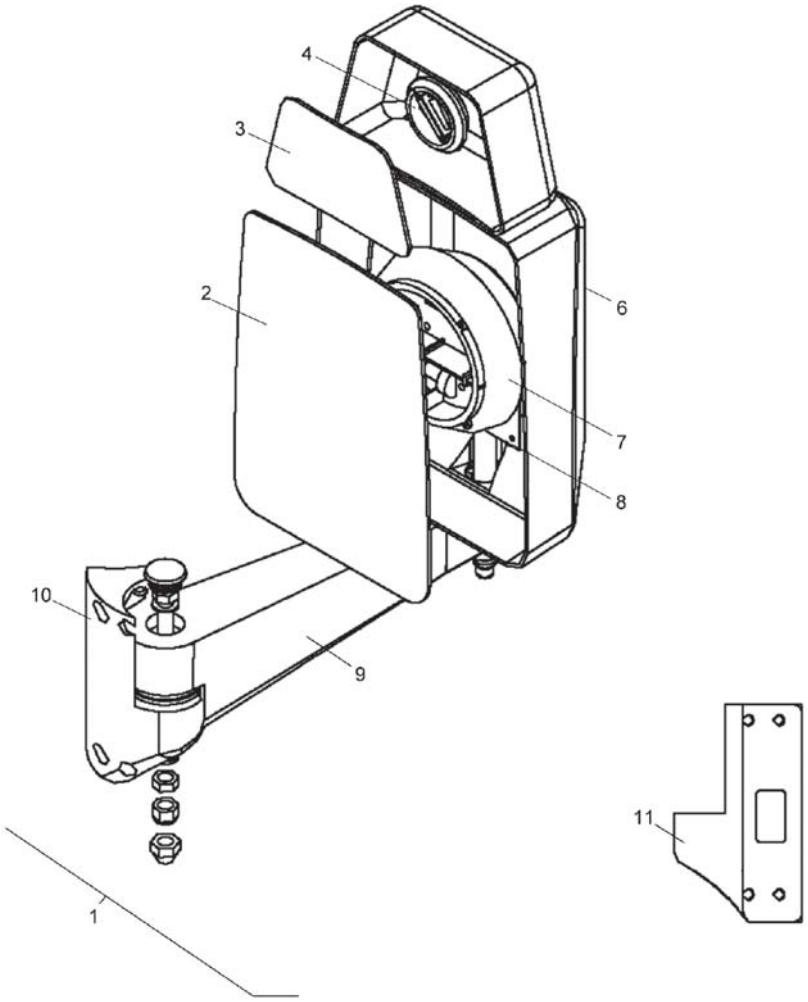

Pos.	Q.	Part n°	Description	Specification
1	1	11203603	Mirror, complete	Re (Black)
2	*1	10916567	Mirror glass	
3	*1	10916568	Mirror glass	
4	*1	10916569	Tilt adjust mechanism	
6	*1	11009939	Housing	
7	*1	10916572	Motor	
8	*1	10916573	Shaft	
11	*1	10710608	Gasket	

Interior mirror

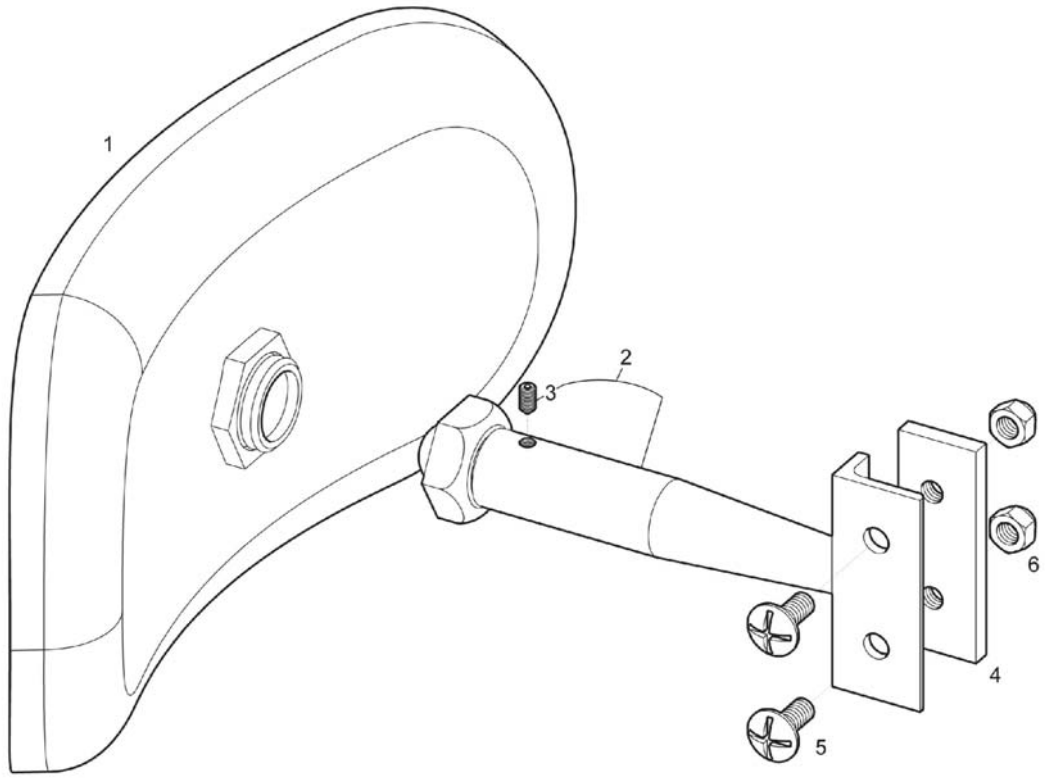

Pos.	Q.	Part n°	Description	Specification
1	1	10959093	Mirror	
2	1	10959373	Mirror arm	(RAL 7012)
3	*1	660298072	Screw	DIN 916 M4x6
4	1	10959368	Plate	(RAL 7012)
5	2	660200511	Screw	M6x15 MAT:IN
6	2	660201104	Nut	DIN 1587 M6 MAT:IN

Front

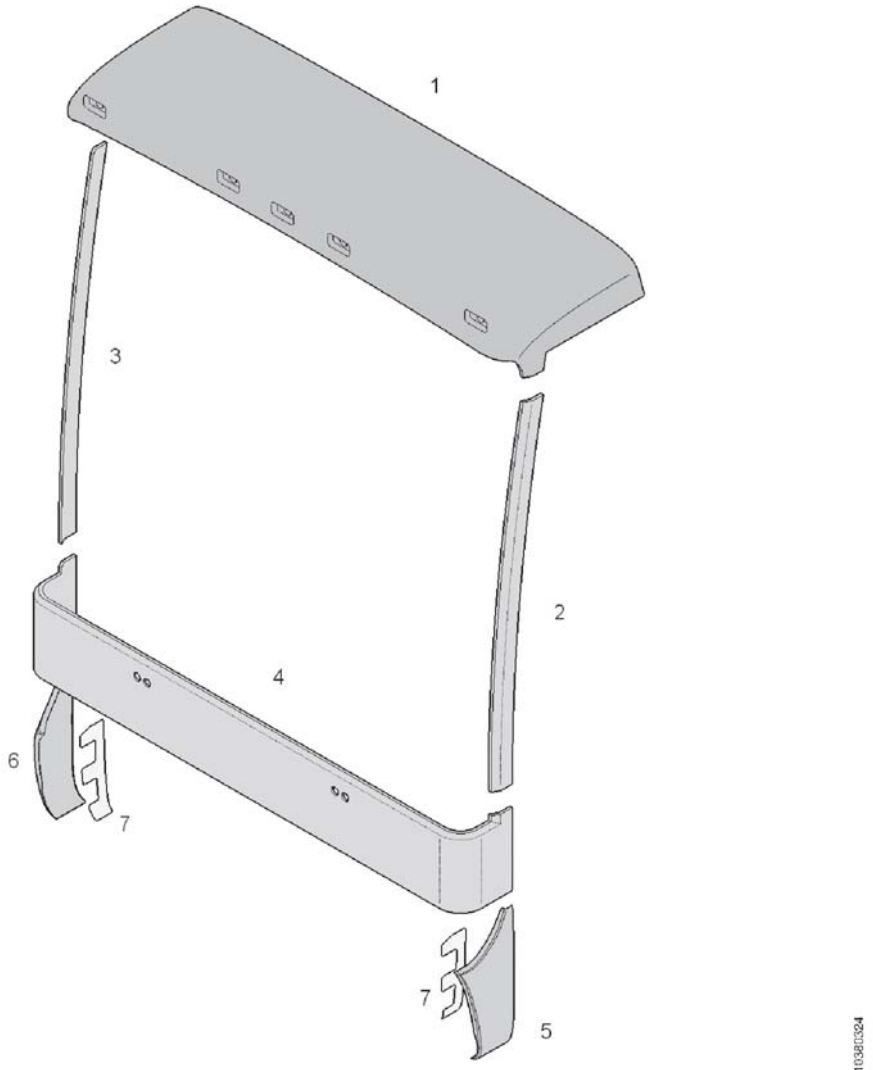

Pos.	Q.	Part n°	Description	Specification
1	1	10886620	Cap	
2	1	11351830	Profile	Li
3	1	11351831	Profile	Re
4	1	11351833	Front	MAT: P
5	1	11376787	Protection shield	Li MAT: ABS
6	1	11376792	Protection shield	Re MAT: ABS
7	#	»1038.03-0...	Side cowling	

Rear wall

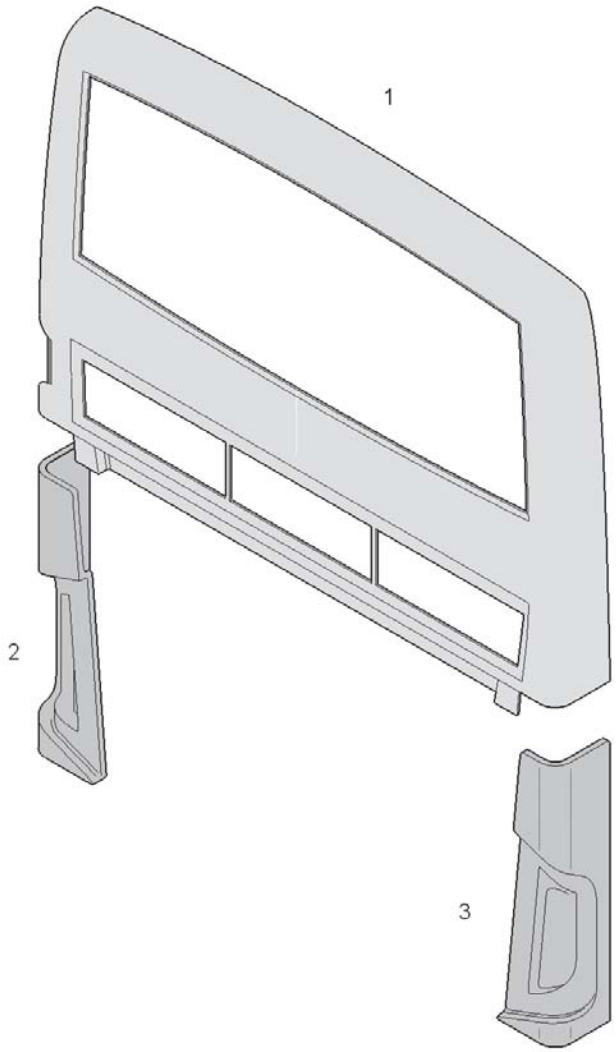

Pos.	Q.	Ref.N°	Description	Spec.
1	1	11341162	Rear wall	
2	1	11346270	Holder	Li
3	1	11346272	Holder	Re

Side cowling (TX40)

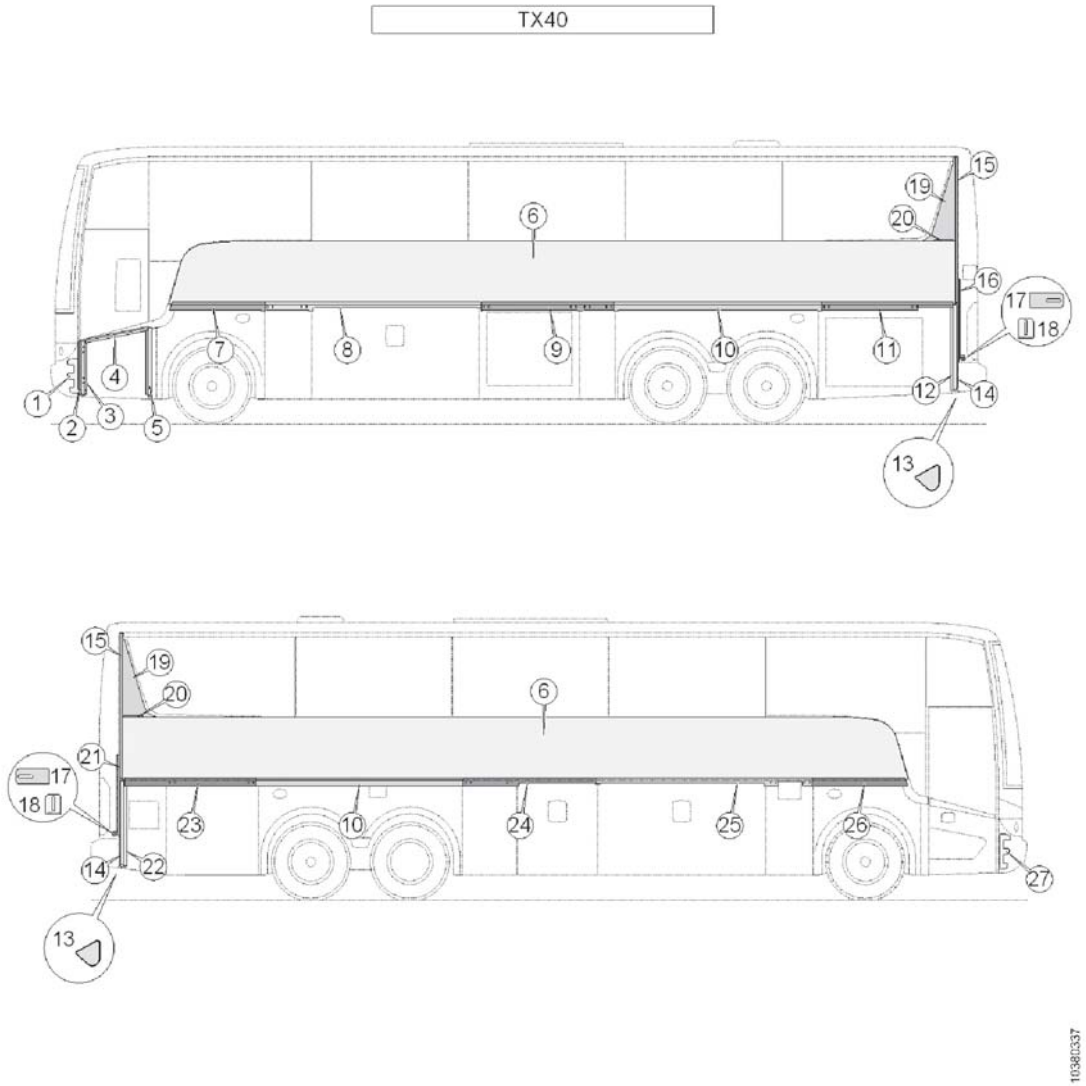

Pos.	Q.	Part n°	Description	Specification
1	1	90118367	Sheet	d.=1,5mm MAT: IN
2	1	90117096	Sheet	d.=1mm MAT: IN
3	1	90117092	Sheet	MAT: IN
4	1	90117521	Sheet	d.=1mm MAT: IN
5	1	90118296	Sheet	d.=1mm MAT: IN
6	2	90118247	Sheet	d.=1mm MAT: Galfan
7	1	90117103	Sheet	d.=1mm MAT: IN
8	1	90118244	Sheet	d.=1mm MAT: IN
9	1	10700858	Sheet	d.=1mm MAT: IN
10	2	10700874	Sheet	d.=1mm MAT: IN
11	1	90117112	Sheet	d.=1mm MAT: IN
12	1	90117115	Sheet	d.=1mm MAT: IN
13	2	10700863	Reinforcement	MAT:IN
14	2	90118297	Plate	1119x30 d.=2mm MAT: IN
15	2	90118298	Plate	1910x30 d.=2mm MAT: IN
16	1	90118140	Sheet	d.=1mm MAT: IN
17	2	90118141	Mounting plate	110x50 d.=3mm MAT: IN
18	2	90118142	Mounting plate	90° d.=3mm MAT: IN

Side cowling (TX40)

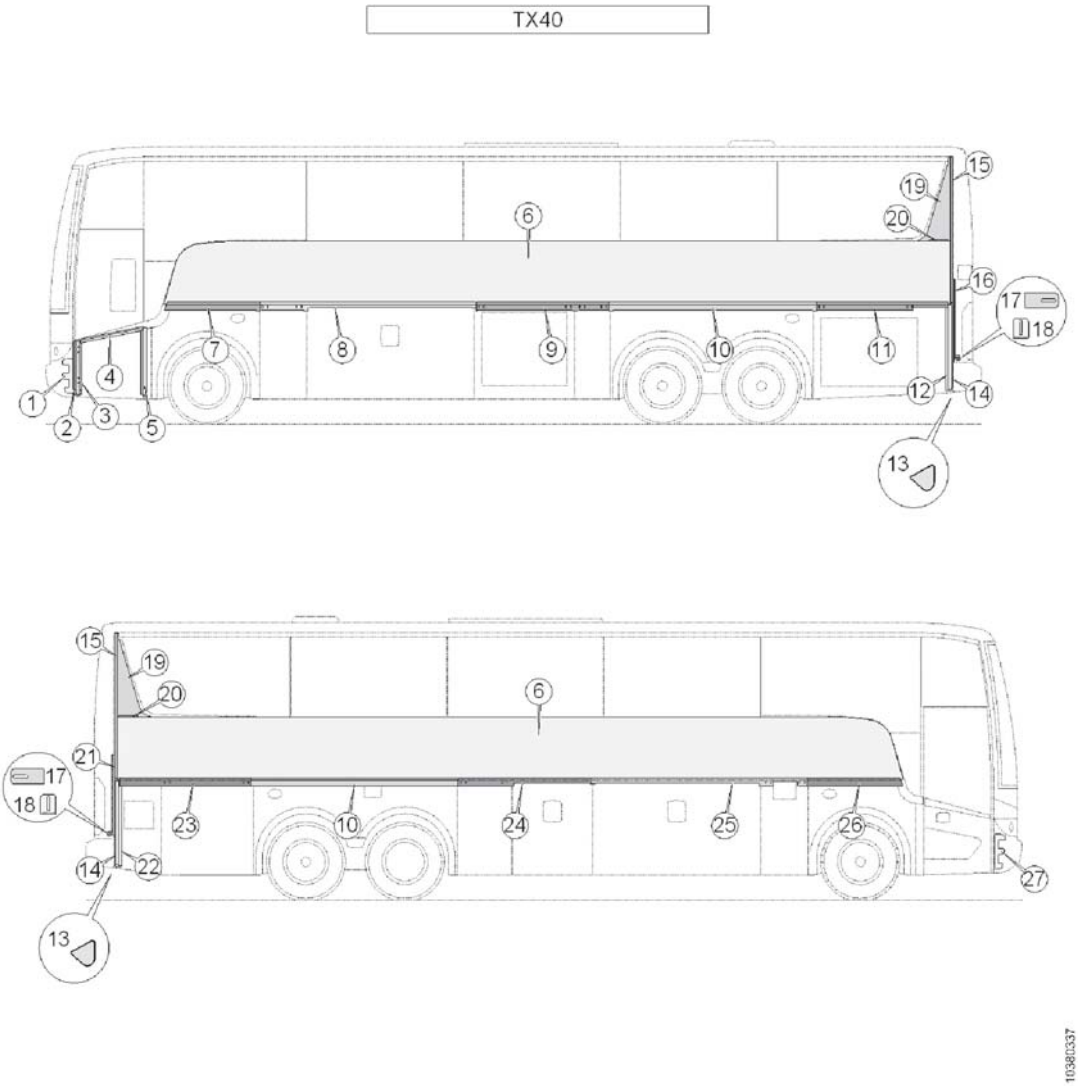

Pos.	Q.	Part n°	Description	Specification
19	2	90111461	Sheet	d.=1mm MAT: AL
20	2	90111462	Plate	20x250 d.=8mm MAT: IN
21	1	90118652	Sheet	d.=1mm MAT: IN
22	1	90117114	Sheet	d.=1mm MAT: IN
23	1	90117113	Sheet	d.=1mm MAT: IN
24	1	90117423	Sheet	d.=1mm MAT: IN
25	1	90118243	Sheet	d.=1mm MAT: IN
26	1	90117106	Sheet	d.=1mm MAT: IN
27	1	90118368	Sheet	d.=1,5mm MAT: IN

Side cowling (TX45)

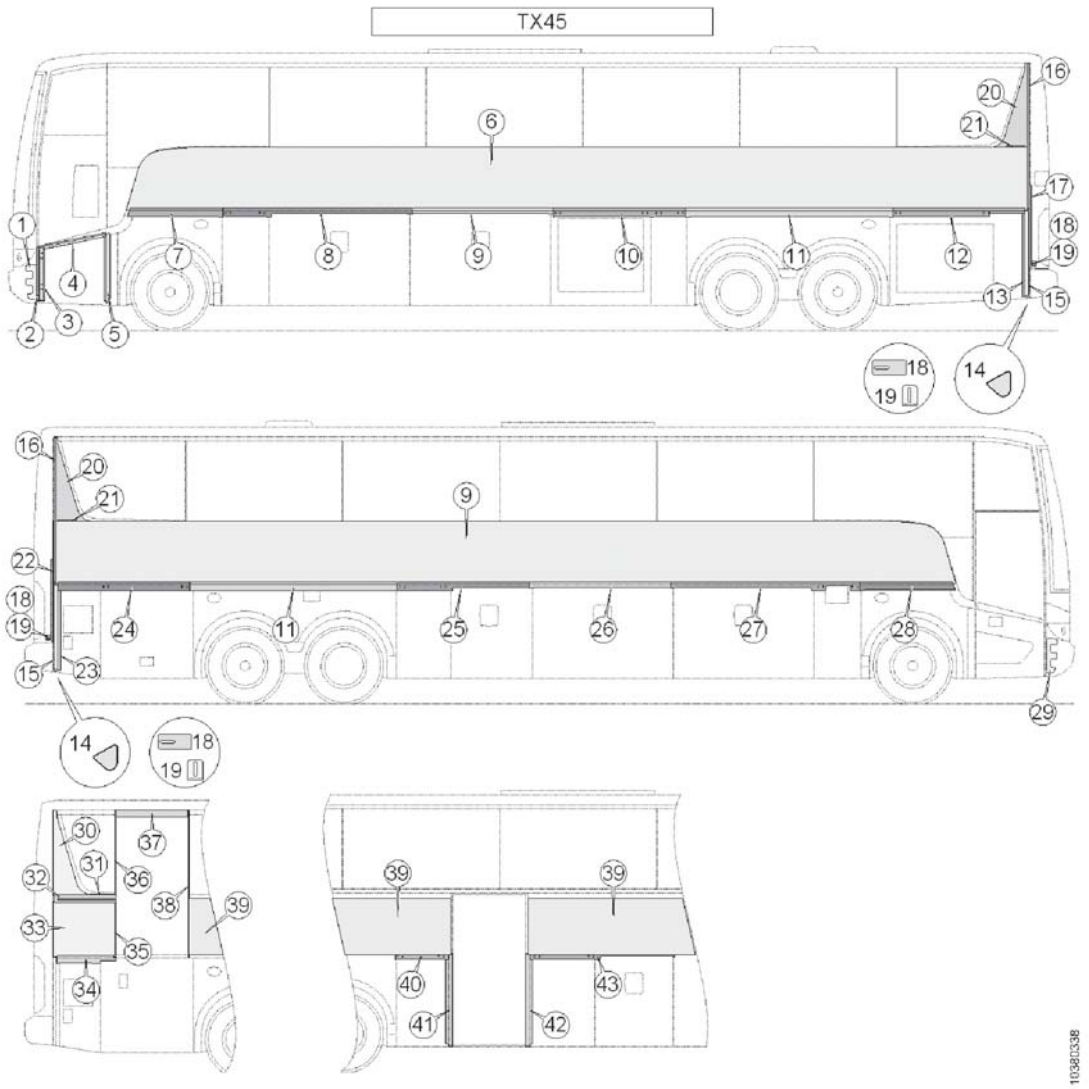

Pos.	Q.	Part n°	Description	Specification
1	1	90118367	Sheet	d.=1,5mm MAT: IN
2	1	90117096	Sheet	d.=1mm MAT: IN
3	1	90117092	Sheet	MAT: IN
4	1	90117521	Sheet	d.=1mm MAT: IN
5	1	90118296	Sheet	d.=1mm MAT: IN
6	2	90117091	Sheet	d.=1mm MAT: Galfan
7	1	90117103	Sheet	d.=1mm MAT: IN
8	1	90117108	Sheet	d.=1mm MAT: IN
9	1	90117111	Sheet	d.=1mm MAT: IN
10	1	10700858	Sheet	d.=1mm MAT: IN
11	2	10700874	Sheet	d.=1mm MAT: IN
12	1	90117112	Sheet	d.=1mm MAT: IN
13	1	90117115	Sheet	d.=1mm MAT: IN
14	2	10700863	Reinforcement	MAT:IN
15	2	90118297	Plate	1119x30 d.=2mm MAT: IN
16	2	90118298	Plate	1910x30 d.=2mm MAT: IN
17	1	90118140	Sheet	d.=1mm MAT: IN
18	2	90118141	Mounting plate	110x50 d.=3mm MAT: IN

Side cowling (TX45)

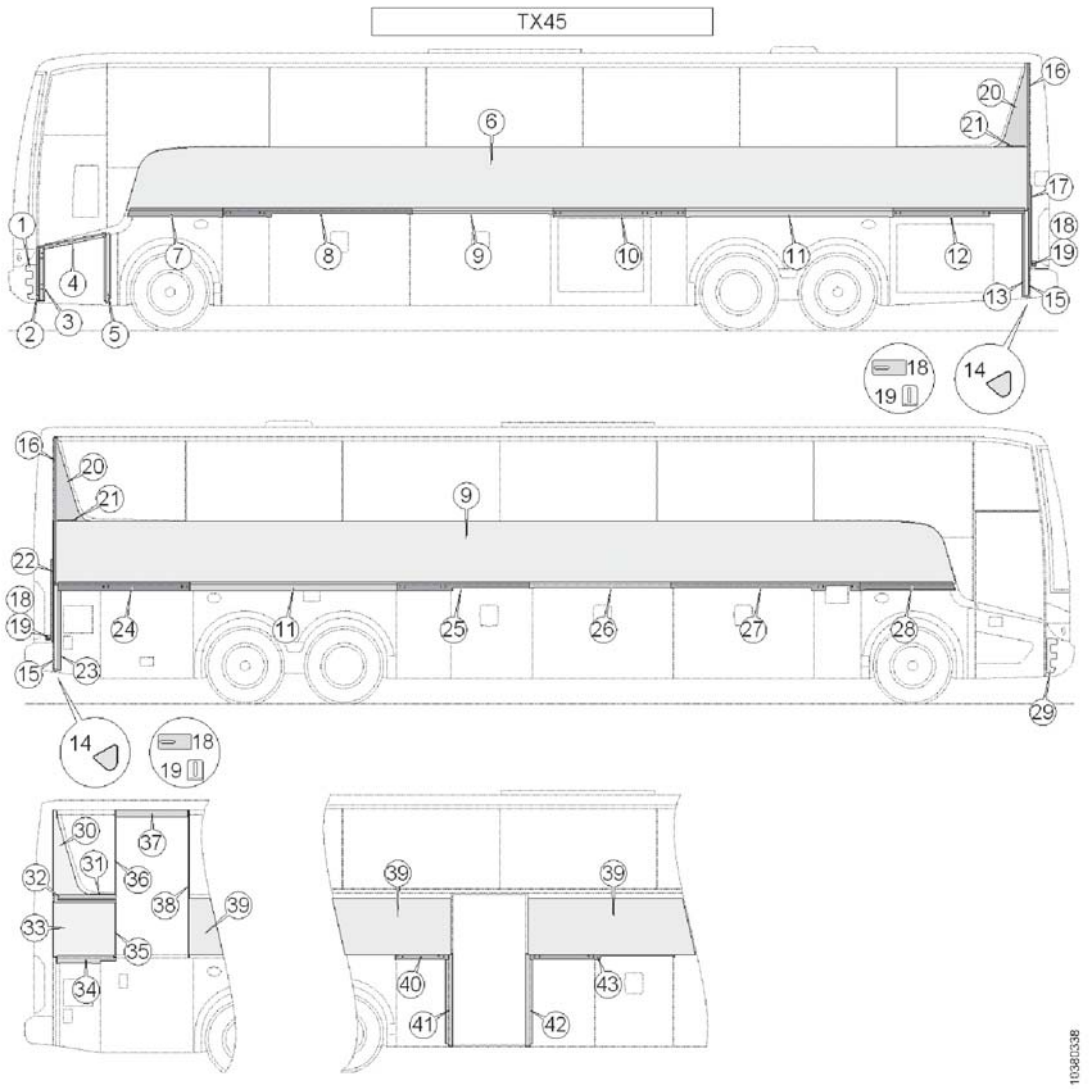

Pos.	Q.	Part n°	Description	Specification
19	2	90118142	Mounting plate	90° d.=3mm MAT: IN
20	2	90111461	Sheet	d.=1mm MAT: AL
21	2	90111462	Plate	20x250 d.=8mm MAT: IN
22	1	90118652	Sheet	d.=1mm MAT: IN
23	1	90117114	Sheet	d.=1mm MAT: IN
24	1	90117113	Sheet	d.=1mm MAT: IN
25	1	90117423	Sheet	d.=1mm MAT: IN
26	1	90117110	Sheet	d.=1mm MAT: IN
27	1	90117109		d.=1mm MAT: IN
28	1	90117106	Sheet	d.=1mm MAT: IN
29	1	90118368	Sheet	d.=1,5mm MAT: IN
		-		
30	1	90118299	Sheet	d.=1mm MAT: IN
31	1	90118302	Plate	335x20 d.=3mm MAT: IN
32	1	90118303	Sheet	d.=1mm MAT:IN
33	1	90117784	Sheet	d.=1mm MAT: IN
34	1	90117788	Sheet	d.=1mm MAT: IN
35	1	90111818	Plate	725x18 d.=8mm MAT: IN

Side cowling (TX45)

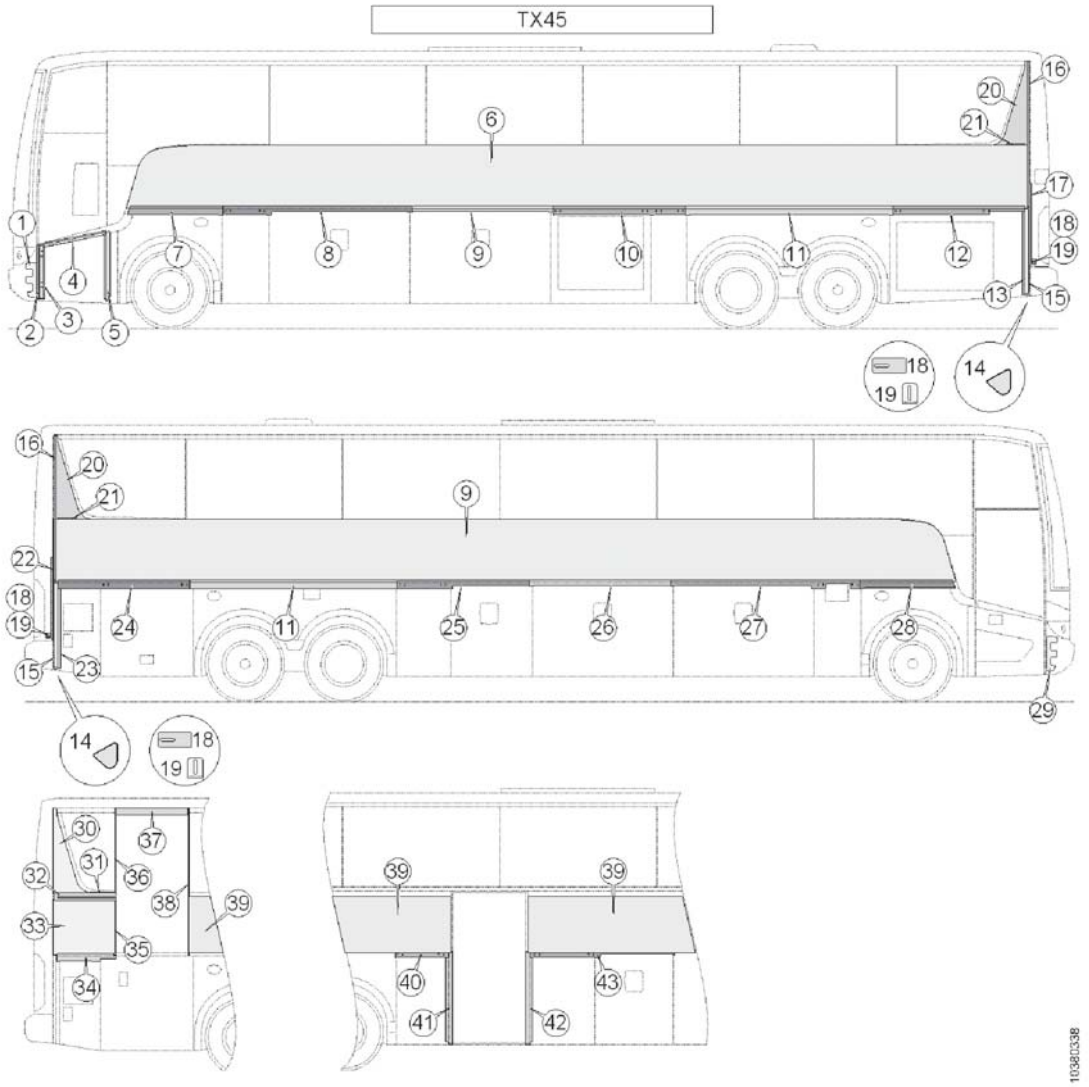

Pos.	Q.	Part n°	Description	Specification
36	1	90117787	Plate	1140x18 d.=8mm MAT: IN
37	1	90107097	Sheet	950x85 d.=3mm MAT: IN
38	1	90117786	Plate	1939x18 d.=8mm MAT: IN
39	1	90117783	Sheet	d.=1mm MAT: Galfan
		-		
40	1	90118174	Sheet	d.=1mm MAT: IN
41	1	90118167	Sheet	d.=1mm MAT: IN
42	1	90118169	Sheet	d.=1mm MAT: IN
43	1	90118176	Sheet	d.=1mm MAT: IN

Quantity per Coach	Part Number	Description	
1	11278415	Switch, Dash - Start	
1	11358019	Switch, Dash - Cruise Set/Resume	
1	11358018	Switch, Dash - Cruise On/Off	
1	11357994	Switch, Dash - Override	
1	11278641	Switch, Dash - Exterior Lights	
1	11278639	Switch, Dash - Fog Lamps	
1	11378850	Switch, Dash - Cornering Lights	
1	11278660	Switch, Dash - Perimeter Lights	
1	11278669	Switch, Dash - Hazard	
1	11278675	Switch, Dash - Driver's Light	
1	11278673	Switch, Dash - Passenger Lights	
1	11278671	Switch, Dash - Reading Lights	
1	11278681	Switch, Dash - Guide Light	
1	11278683	Switch, Dash - Luggage Lights	
1	11278761	Switch, Dash - Lavatory	
1	11278709	Switch, Dash - Guide Call	
1	11278754	Switch, Dash - Mirror Heating	
1	11278687	Switch, Dash - Roller Curtains	
1	11278482	Switch, Dash - Raise/Lower	
1	11378935	Switch, Dash - Kneeler	
1	11278491	Switch, Dash - Tag Unloader	
1	11333724	Switch, Dash - Master	
1	11278489	Switch, Dash - ATC	
1	11357988	Switch, Dash - Jake Brake	
1	11278445	Switch, Dash - Back-Up Alarm	
1	11278487	Switch, Dash - Wheelchair Lift	
1	11278632	Switch, Dash - Baggage Bay Lock	
1	11278427	Switch, Dash - 120V Outlets	
1	11278627	Switch, Dash - Lane Departure	
1	11278832	Switch, Dash - Passenger Signal	
1	11358024	Switch, Dash - Heater	
1	11322033	Switch, Dash - Adaptive Cruise	
1	11288892	Decal, "Press Brake Pedal"	
3	11207067	Frame, Dash Switches	
3	11207090	Frame, Dash Switches	
3	11207097	Frame, Dash Switches	
?	11280790	Switch, Blank Filler	
1	11266940	Assembly, A/C Controller Switch	
1	11369628	Timer, Heater	
1	11303389	Oulet, 12Volt Power	
1	660761940	Indicator, ABS (Green)	
1	11263136	LED, Red	

1 11303032 Switch, Jumpseat

Passenger service module

1

Pos.	Q.	Ref.N°	Description	Spec.
1	#	11366900	Passenger service module	

VAN HOOL TX USA

PICTURE	DESCRIPTION	ELLAMP PART NUMBER	VAN HOOL PART NUMBER	MQ PER ORDER	COMMENTS
	COMPLETE TX SERVICE SET WITHOUT WINGS	X990810001A02	11366900	100 pc	
	RIGHT WING	A70300890A001	11366902	100 pc	
	LEFT WING	A70300889A001	11366901	100 pc	
	AIR DEFLECTOR (BACK SIDE)	A70300893A001	11348582	100 pc	
	LOUDSPEAKER VISATON F13	P181000012-01	10962846	1 pc	
	LOUDSPEAKER CABLING	D37200692-001	11373173	100 PC	
	SPOT LIGHT (BULB + ASSEMBLED CIRCUIT - NO EXTERNAL FRAME)	Y990810002A01	11373176	will be updated	external frame will not be damaged by substituting the spot light, therefore is not included
	AIR JET (COMPLETE, ASSEMBLED + EXTERNAL FRAME)	Y990810003A01	11373205	will be updated	this kit include external frame because , by substituting the air jet, the frame will be damaged. So it is necessary to include it into the substitution kit
	RGB RING	A70300891A001	11373186	will be updated	

SPACER AND HEADER

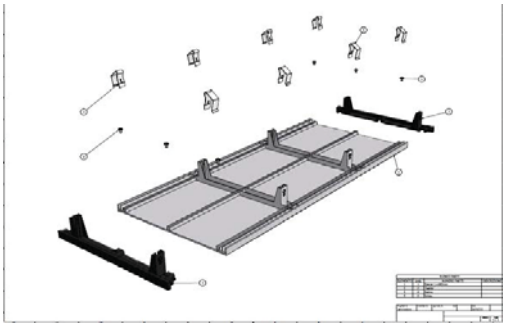

PICTURE	DESCRIPTION	ELLAMP PART NUMBER	VAN HOOL PART NUMBER	MQ PER ORDER	COMMENTS
	COMPLETE SPACER + 4 ASSEMBLED SPRINGS	Y990810001A02	11362565	100 pc	
	HEADER WITHOUT SPRINGS	A70300895A001	11362784	100 pc	due to position of screw, springs will be supplied separately to avoid damages.
	SPRINGS	X990810001A01	11372994	500 pc	
	FINISHING FOR HEADER	3140017	11373034	1 ROLL OF 20MT	it is suggested to use a finishing as Ellamp normally does to finish the joint between header and spacer.

Chair leg (aisle side)

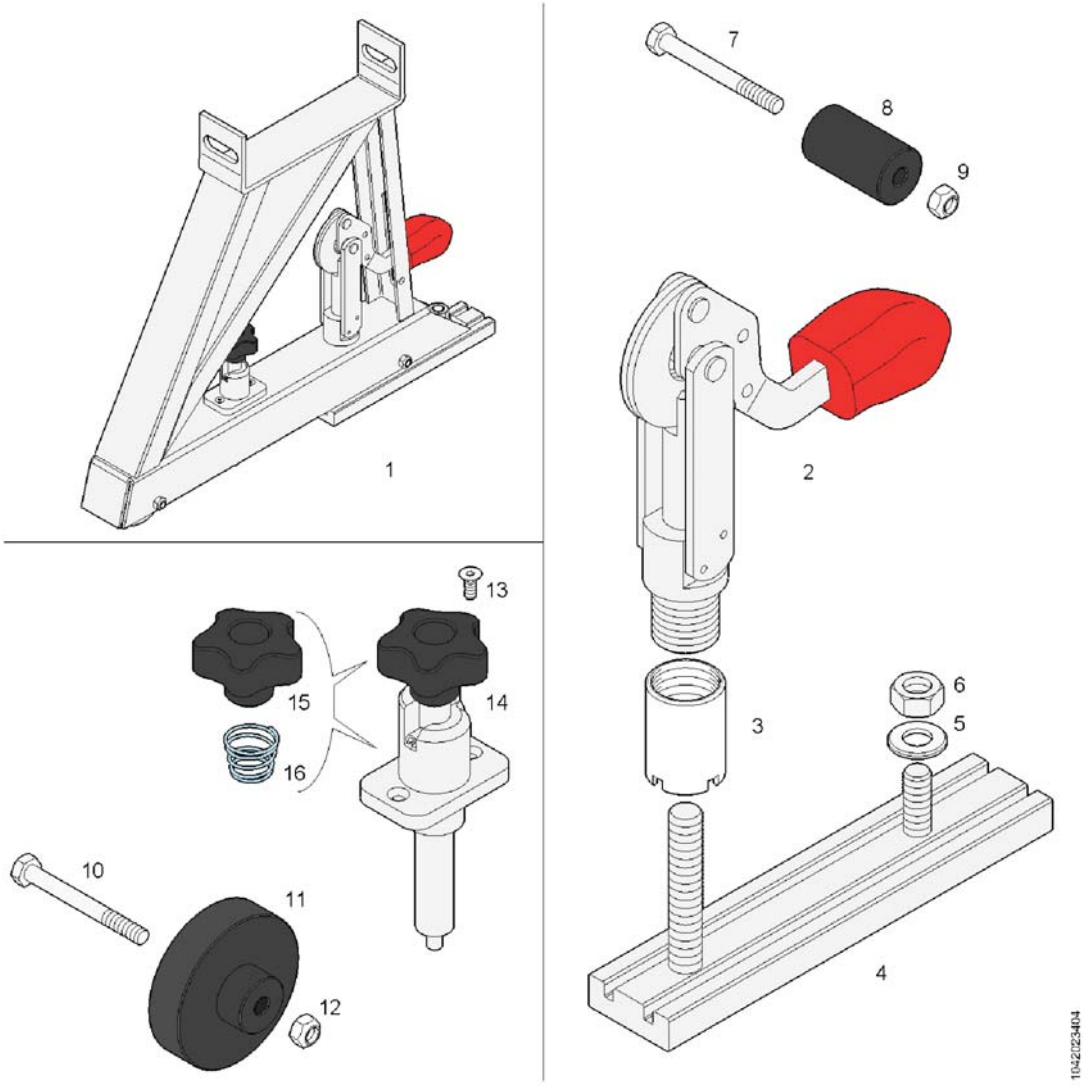

Pos.	Q.	Part n°	Description	Specification
1	1	11346023	Chair leg	
2	*1	11118676	Locking mechanism	
3	*1	11349874	Threaded ring	M24x1,5mm
4	*1	11346284	Fastener	190x40x14 M12x1,75-M10x1,5
5	*1	660627920	Washer	DIN 125 A10
6	*1	660203301	Nut	DIN 934 M10x1,5 k.=8
7	*1	11346735	Screw	DIN 931 M6x1x60mm k.=10.9
8	*1	11366301	Roller	Ø22 l.=38mm MAT: ERTALON (Z)
9	*1	660207410	Lock nut	DIN 980 M6x1,00 k.=10
10	*1	11346735	Screw	DIN 931 M6x1x60mm k.=10.9
11	*1	11345932	Wheel	Ø60 MAT: ERTALON (Z)
12	*1	660207410	Lock nut	DIN 980 M6x1,00 k.=10
13	*2	10614633	Screw	DIN7991 M4x0.70x10 k.=8.8
14	*1	11345979	Locking mechanism	
15	**1	11027975	Button	
16	**1	11027915	Spring	

Chair leg (window side)

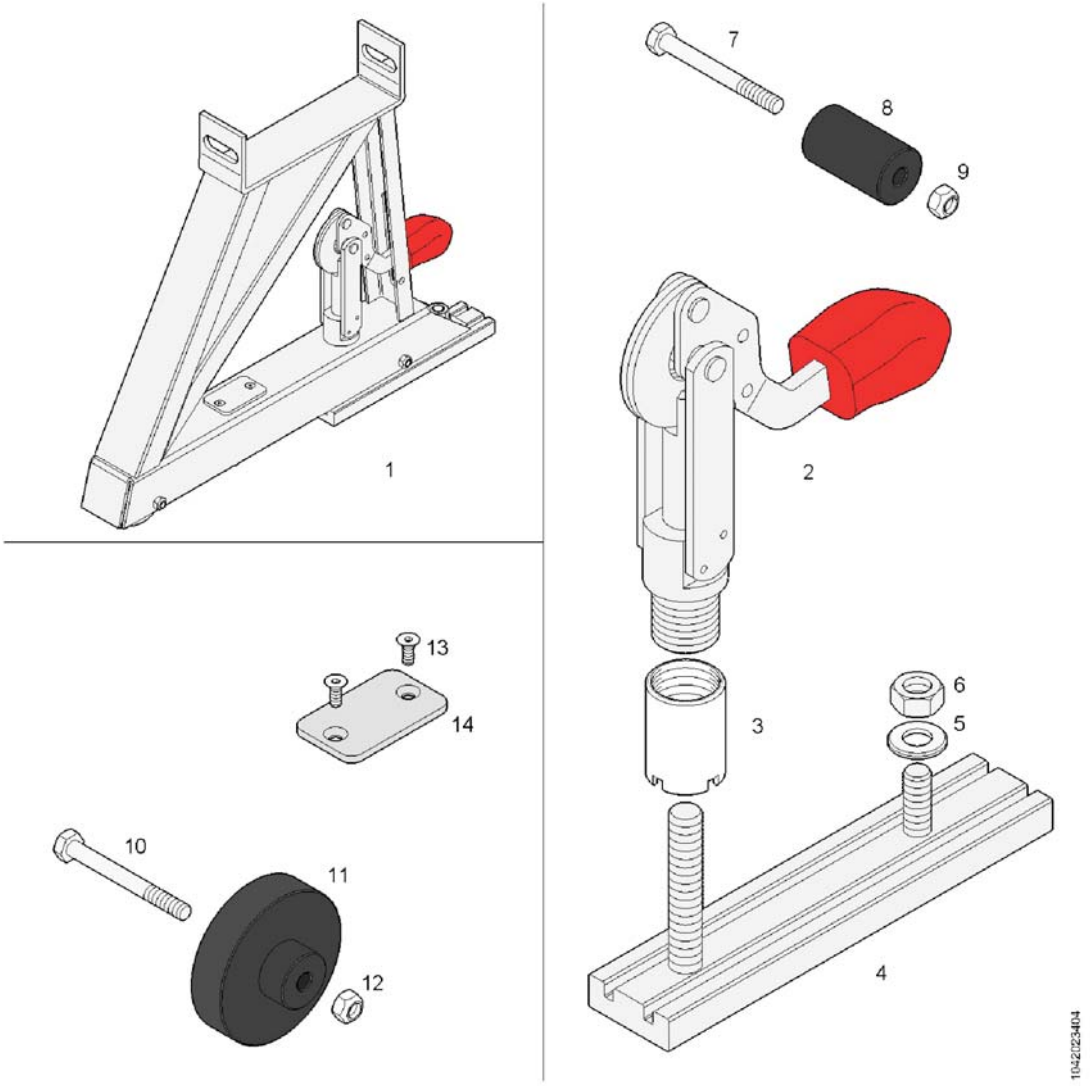

Pos.	Q.	Part n°	Description	Specification
1	1	11346816	Chair leg	
2	*1	11118676	Locking mechanism	
3	*1	11349874	Threaded ring	M24x1,5mm
4	*1	11346284	Fastener	190x40x14 M12x1,75-M10x1,5
5	*1	660627920	Washer	DIN 125 A10
6	*1	660203301	Nut	DIN 934 M10x1,5 k.=8
7	*1	11346735	Screw	DIN 931 M6x1x60mm k.=10.9
8	*1	11366301	Roller	Ø22 l.=38mm MAT: ERTALON (Z)
9	*1	660207410	Lock nut	DIN 980 M6x1,00 k.=10
10	*1	11346735	Screw	DIN 931 M6x1x60mm k.=10.9
11	*1	11345932	Wheel	Ø60 MAT: ERTALON (Z)
12	*1	660207410	Lock nut	DIN 980 M6x1,00 k.=10
13	*2	10614633	Screw	DIN7991 M4x0.70x10 k.=8.8
14	*1	11349359	Cover plate	

Seat - Armshells

Seat - Left side of coach
Cover - Right side of seat

Seat - Right side of coach
Cover - Left side of seat

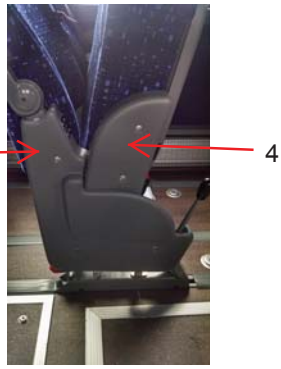

Seat - Left side of coach
Covers - Right side of seat

Seat - Right side of coach
Covers - Left side of seat

Seat - Rear of coach
Cover - Right side of seat

Pos.	Q.	Part n°	Description	Specification
1	#	11301190	Cover, RH Side Seat	
2	#	11337444	Cover, LH Side Seat	
3	#	11368162	Cover, RH Sider Seat	
4	#	11367981	Cover, RH Sider Seat - Small	
5	#	11368147	Cover, LH Sider Seat	
6	#	11367972	Cover, LH Sider Seat - Small	
7	1	11385408	Cover, RH Rear Bench Seat	

Front bumper

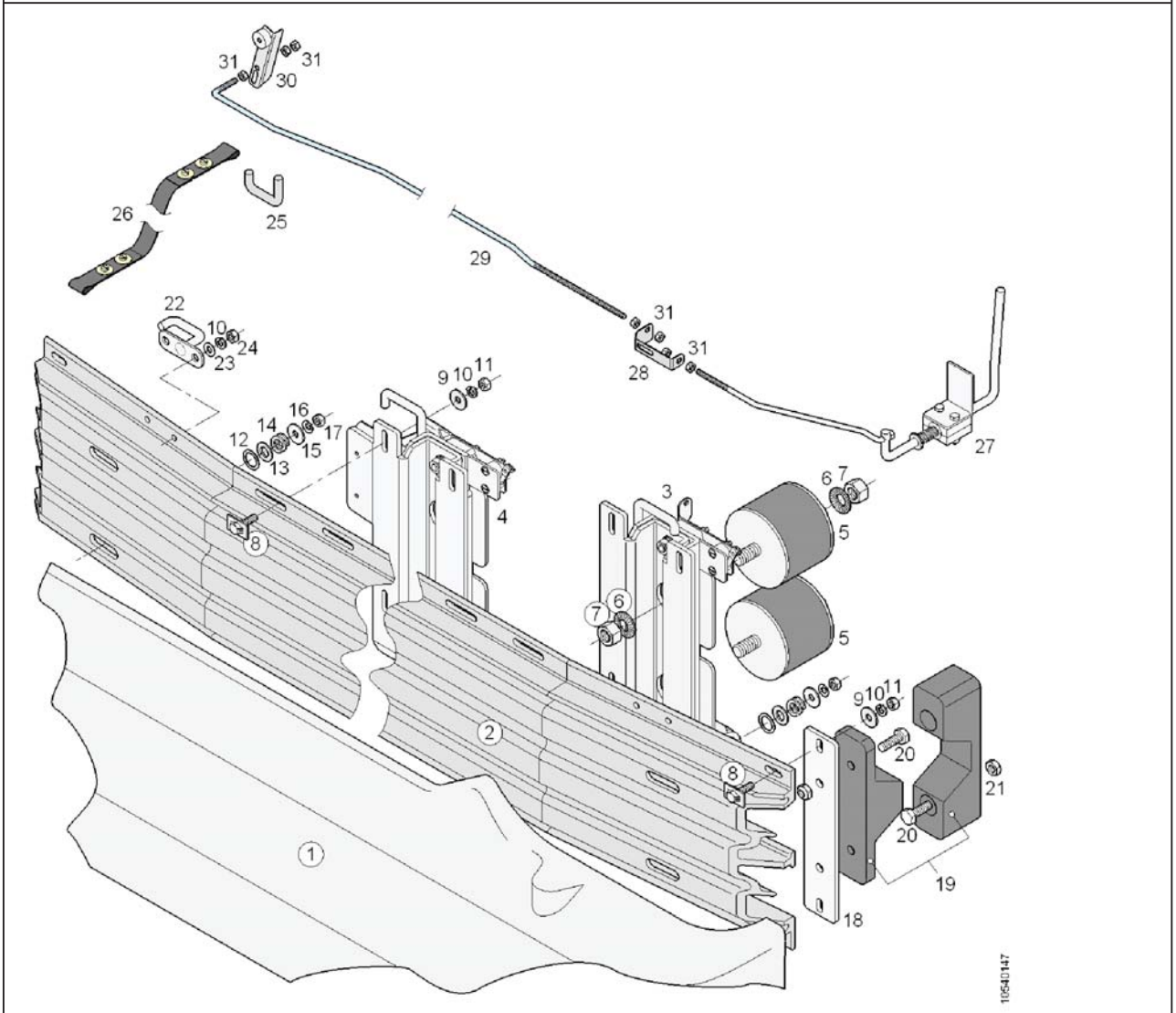

Pos.	Q.	Part n°	Description	Specification
1	1	»1054.01-0...	Front bumper	
2	1	10732467	Bracket	
3	1	91100787	Hinge, complete	Li
4	1	91100784	Hinge, complete	Re
5	4	10683452	Rubber-metal mount	70 Shore A Ø100mm M16
6	8	10580795	Coil spring lock washer	A16
7	8	10621821	Nut	DIN 934 M16x1.5 MAT:IN
8	12	10617317	Fastener	M8x30
9	12	660625907	Washer	DIN 9021 A8,4 MAT:IN
10	16	660636402	Coil spring lock washer	DIN 127 A8 MAT:IN
11	12	660209904	Nut	DIN 934 M8x1,25 MAT:IN
12	6	10655992	Spacer ring	DIN 988 M18x25x1mm
13	6	660629106	Washer	DIN 125 A13 MAT:IN
14	6	11255213	Spring	
15	6	660625907	Washer	DIN 9021 A8,4 MAT:IN
16	6	10745959	Coil spring lock washer	DIN 2093 A16x8,2x0,9 MAT:IN
17	6	660207107	Lock nut	DIN 980 M8x1,25 k.=8
18	2	10704549	Sheet	

Front bumper

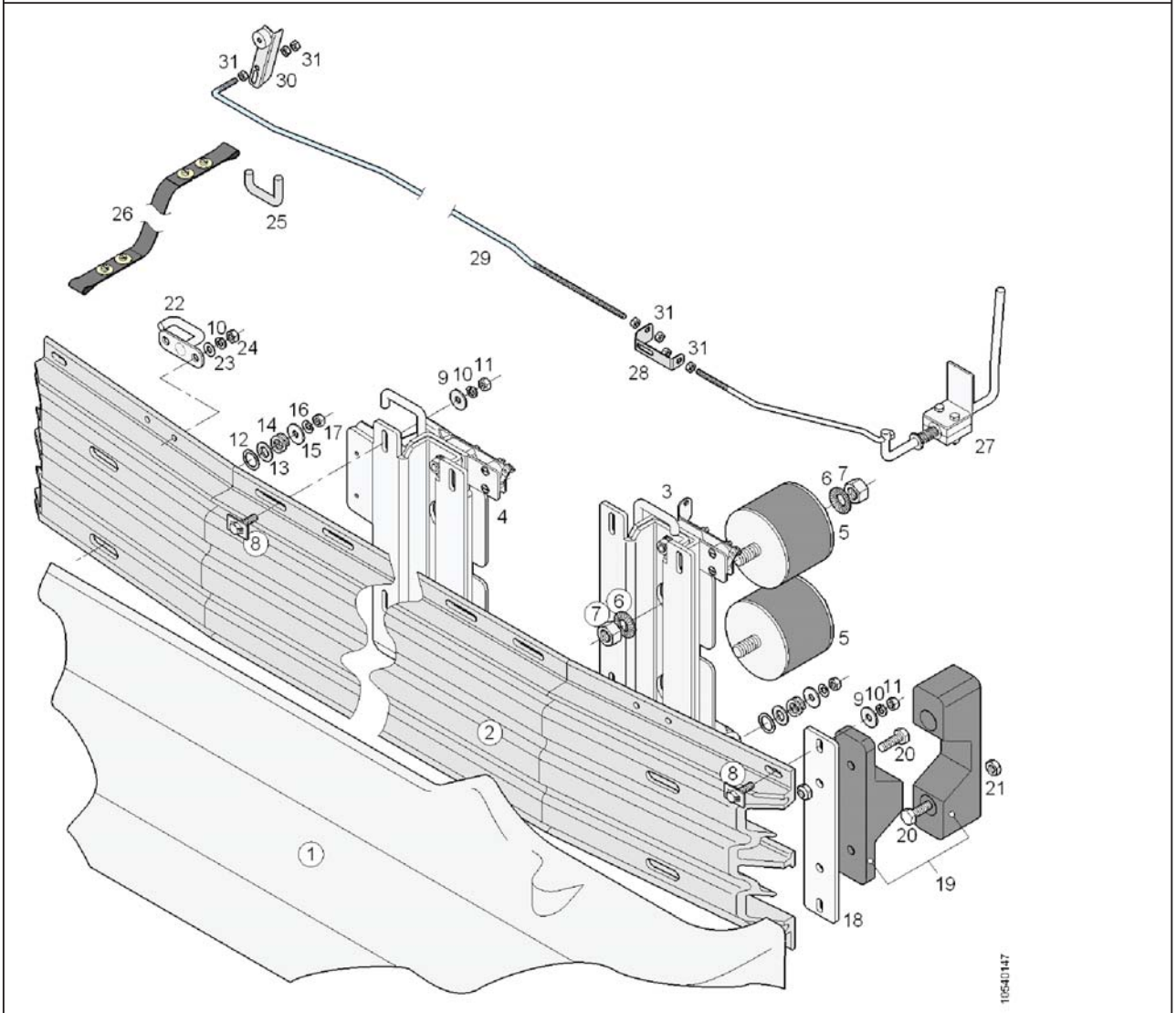

Pos.	Q.	Part n°	Description	Specification
19	2	10686296	Buffer stop	70 Shore A
20	8	660224503	Screw	DIN 933 M10x1,5x30 k.=8.8
21	8	660207101	Lock nut	DIN 985 M10 k.=8
22	2	10704683	Hook	
23	4	660625806	Washer	DIN 125 A8,4 MAT:IN
24	4	660209923	Nut	DIN 934 M8x1,25 MAT:IN
25	2	11366987	Hook	Ø10mm MAT: IN
26	2	10704672	Strap	
27	1	91100792	Latch	
28	1	91100801	Fastener	
29	1	91100816	Rod	M6 MAT: IN
30	1	91100814	Lever	
31	7	660209922	Nut	DIN 934 M6x1 MAT:IN

Front bumper

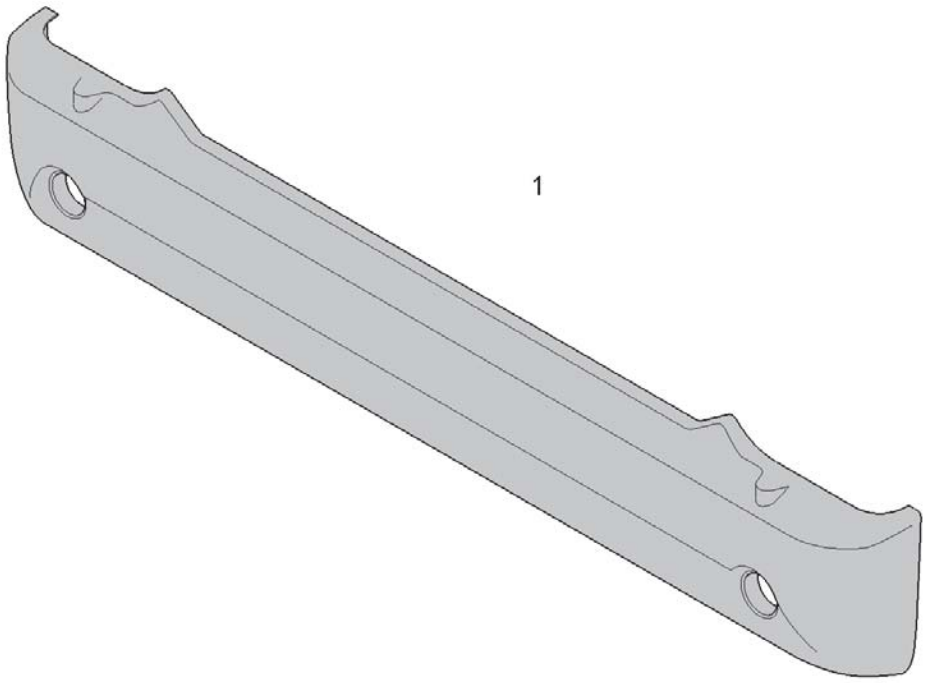

Pos.	Q.	Ref.N°	Description	Spec.
1	1	11351838	Front bumper	MAT: Polyester

Hinge

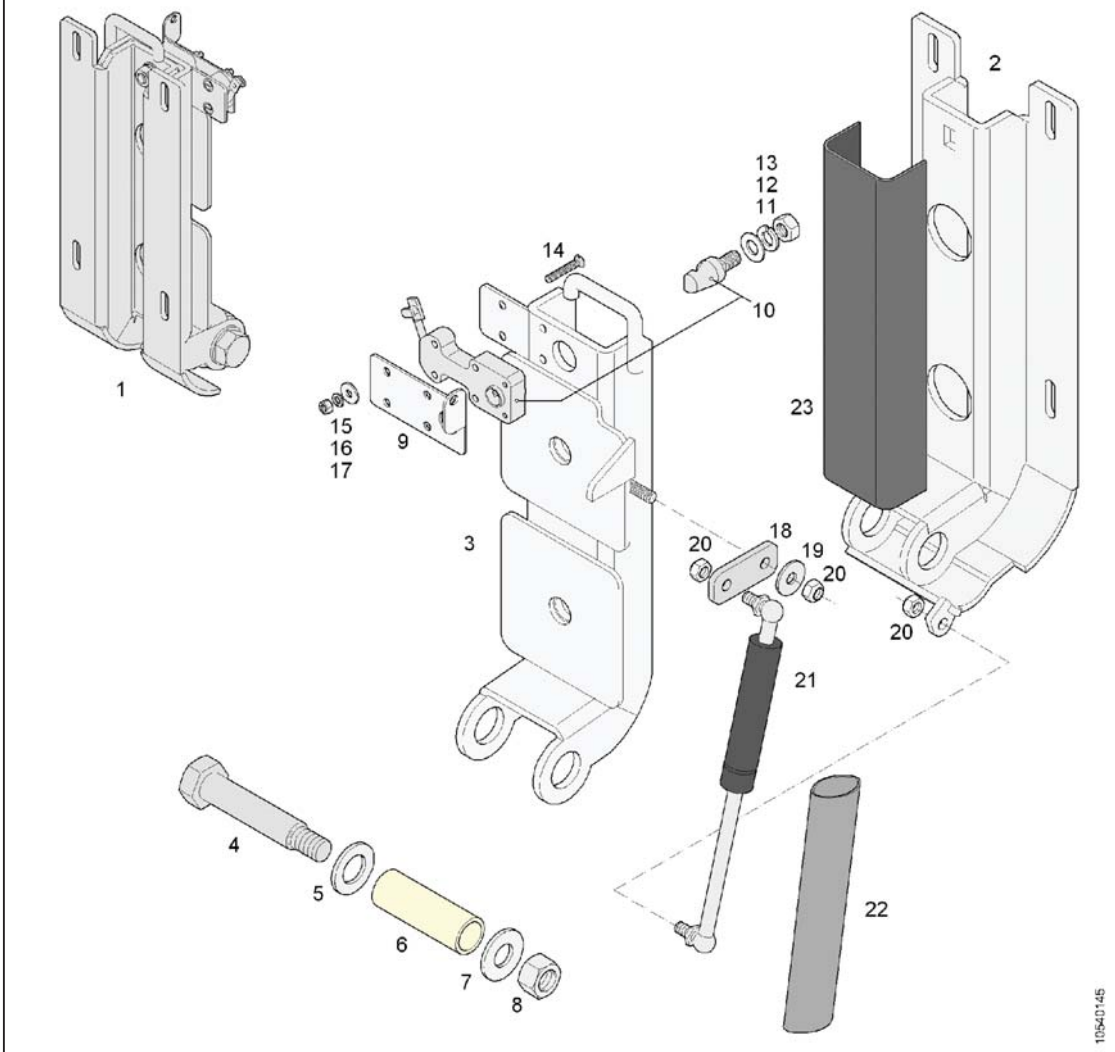

Pos.	Q.	Part n°	Description	Specification
1	1	91100787	Hinge, complete	Li
		-		
2	*1	91100773	Bracket	
3	*1	91100788	Bracket	
4	*1	10704679	Screw	
5	*1	660632609	Washer	DIN 125 M20 MAT:IN
6	*1	10704678	Bush	
7	*1	10704680	Washer	Ø37x17x3 MAT:IN
8	*1	660209910	Nut	DIN 934 M16x2 MAT:IN
9	*1	91100800	Reinforcement	
10	*1	91100600	Lock	
11	**1	660627922	Washer	DIN 125 A10 (10,5x21x2) MAT:IN
12	**1	660636503	Coil spring lock washer	DIN 7980 M10
13	**1	660209911	Nut	DIN 934 M10 MAT:IN
14	*4	660282403	Screw	DIN 963 M5x30 MAT:IN
15	*4	660621505	Washer	DIN 9021 5,3x15x1,6 MAT:IN
16	*4	660636202	Coil spring lock washer	DIN 127 A5 MAT:IN
17	*4	660209936	Nut	DIN 934 M5 MAT:IN

Hinge

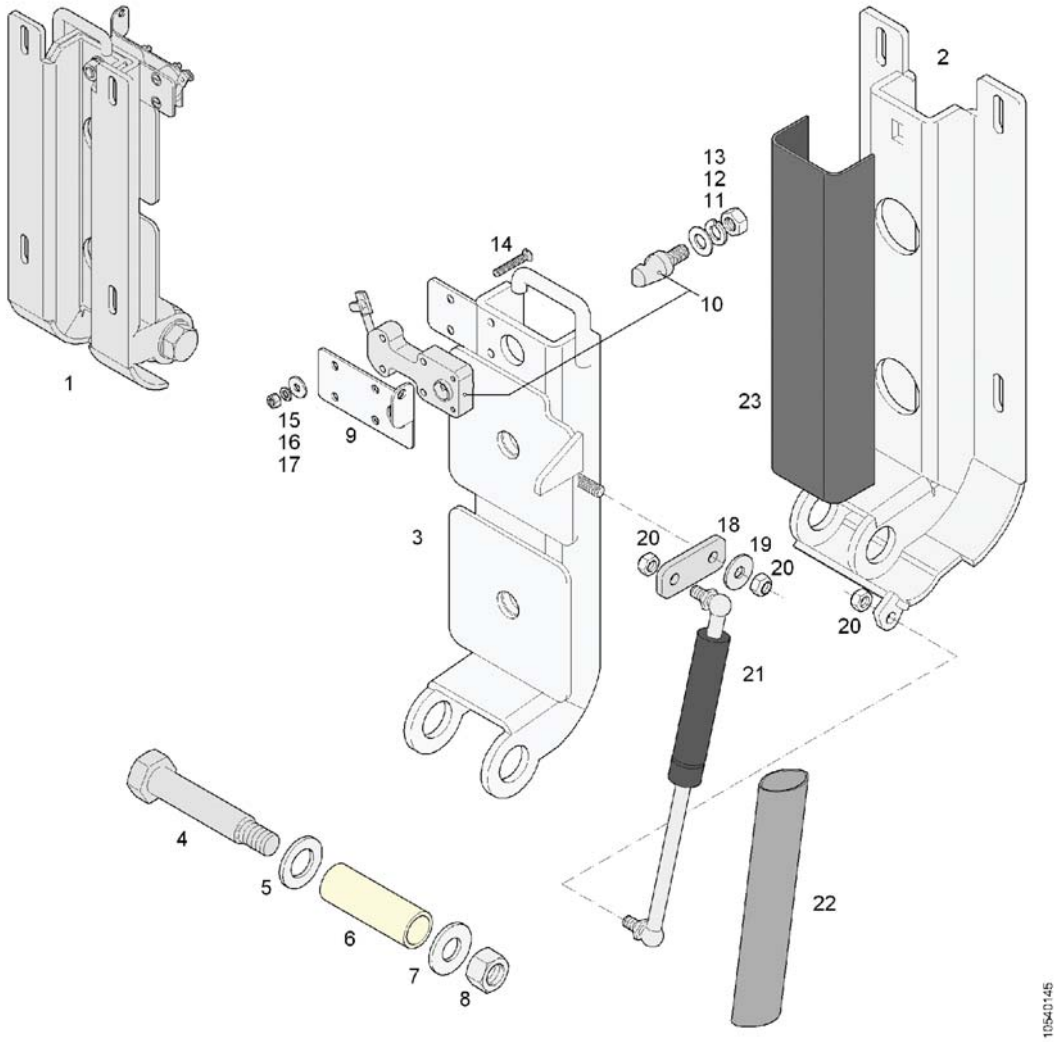

Pos.	Q.	Part n°	Description	Specification
18	*1	10702026	Fastener	
19	*1	660625907	Washer	DIN 9021 A8,4 MAT:IN
20	*3	660207107	Lock nut	DIN 980 M8x1,25 k.=8
21	*1	91100619	Gasstrut	800N
22	#m	660777408	Protection	Ø30-32mm
23	#m²	660486300	Rubber	d.=2mm

Hinge

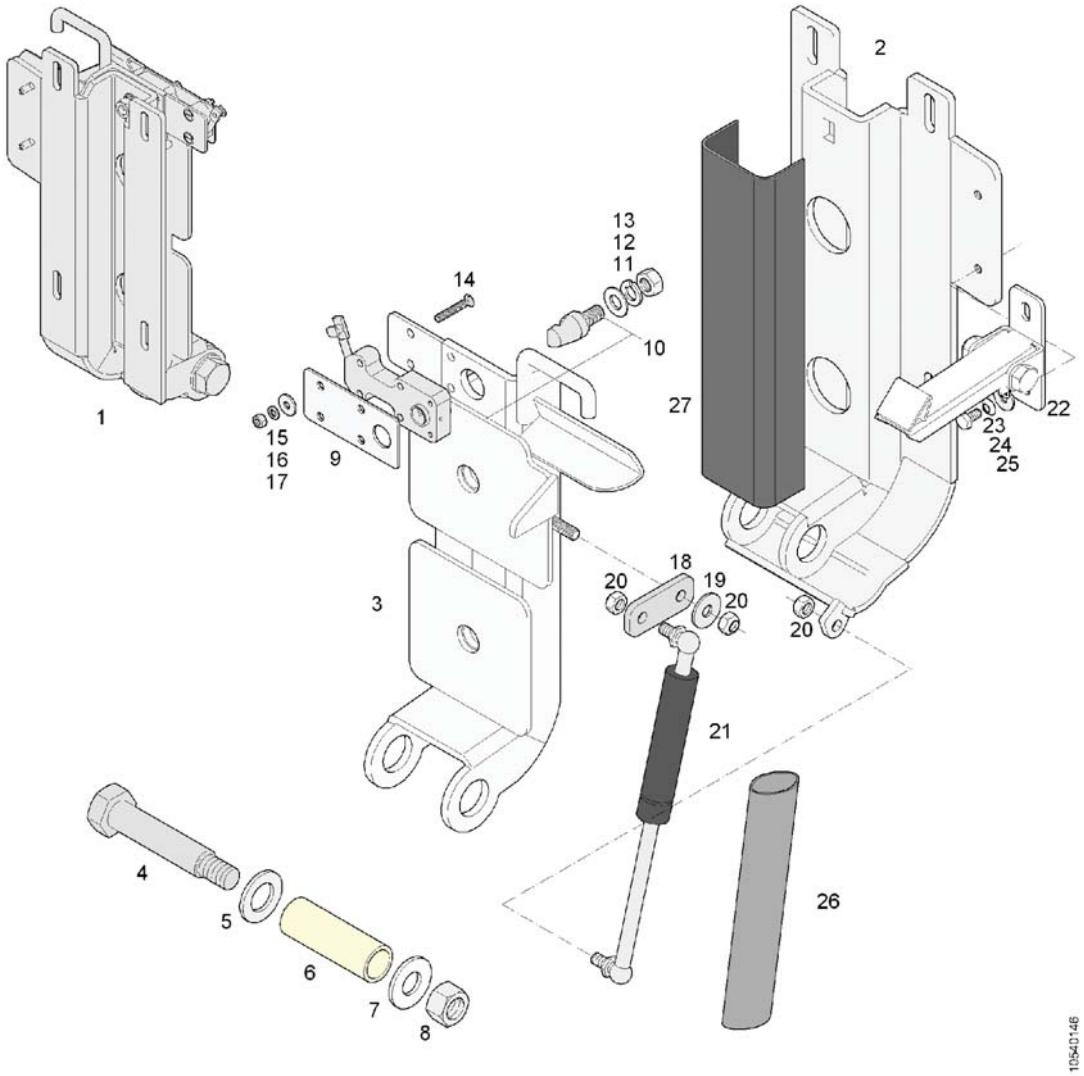

Pos.	Q.	Part n°	Description	Specification
1	1	91100784	Hinge, complete	Re
		-		
2	*1	91100769	Bracket	
3	*1	91100785	Bracket	
4	*1	10704679	Screw	
5	*1	660632609	Washer	DIN 125 M20 MAT:IN
6	*1	10704678	Bush	
7	*1	10704680	Washer	Ø37x17x3 MAT:IN
8	*1	660209910	Nut	DIN 934 M16x2 MAT:IN
9	*1	10732231	Reinforcement	
10	*1	91100600	Lock	
11	**1	660627922	Washer	DIN 125 A10 (10,5x21x2) MAT:IN
12	**1	660636503	Coil spring lock washer	DIN 7980 M10
13	**1	660209911	Nut	DIN 934 M10 MAT:IN
14	*4	660282403	Screw	DIN 963 M5x30 MAT:IN
15	*4	660621505	Washer	DIN 9021 5,3x15x1,6 MAT:IN
16	*4	660636202	Coil spring lock washer	DIN 127 A5 MAT:IN
17	*4	660209936	Nut	DIN 934 M5 MAT:IN

Hinge

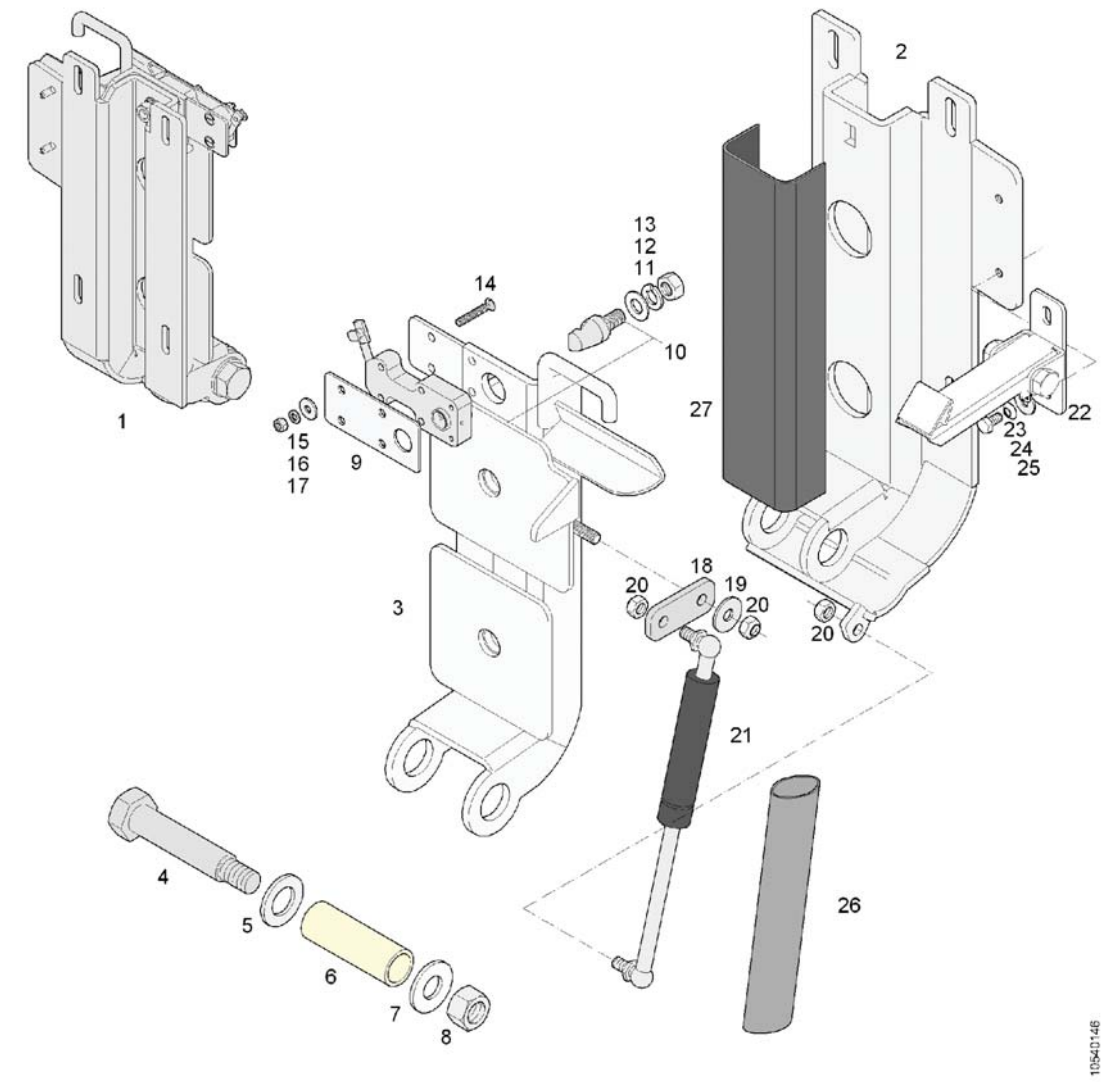

Pos.	Q.	Part n°	Description	Specification
18	*1	10702026	Fastener	
19	*1	660625907	Washer	DIN 9021 A8,4 MAT:IN
20	*3	660207107	Lock nut	DIN 980 M8x1,25 k.=8
21	*1	91100619	Gasstrut	800N
22	*1	10704677	Latch	
23	*2	10612950	Screw	DIN 933 M6x1,00x12 MAT:IN
24	*2	660638413	Coil spring lock washer	DIN 6798 A6 MAT:IN
25	*2	660623508	Washer	DIN 9021 M6 MAT:IN
26	#m	660777408	Protection	Ø30-32mm
27	#m²	660486300	Rubber	d.=2mm

Latch

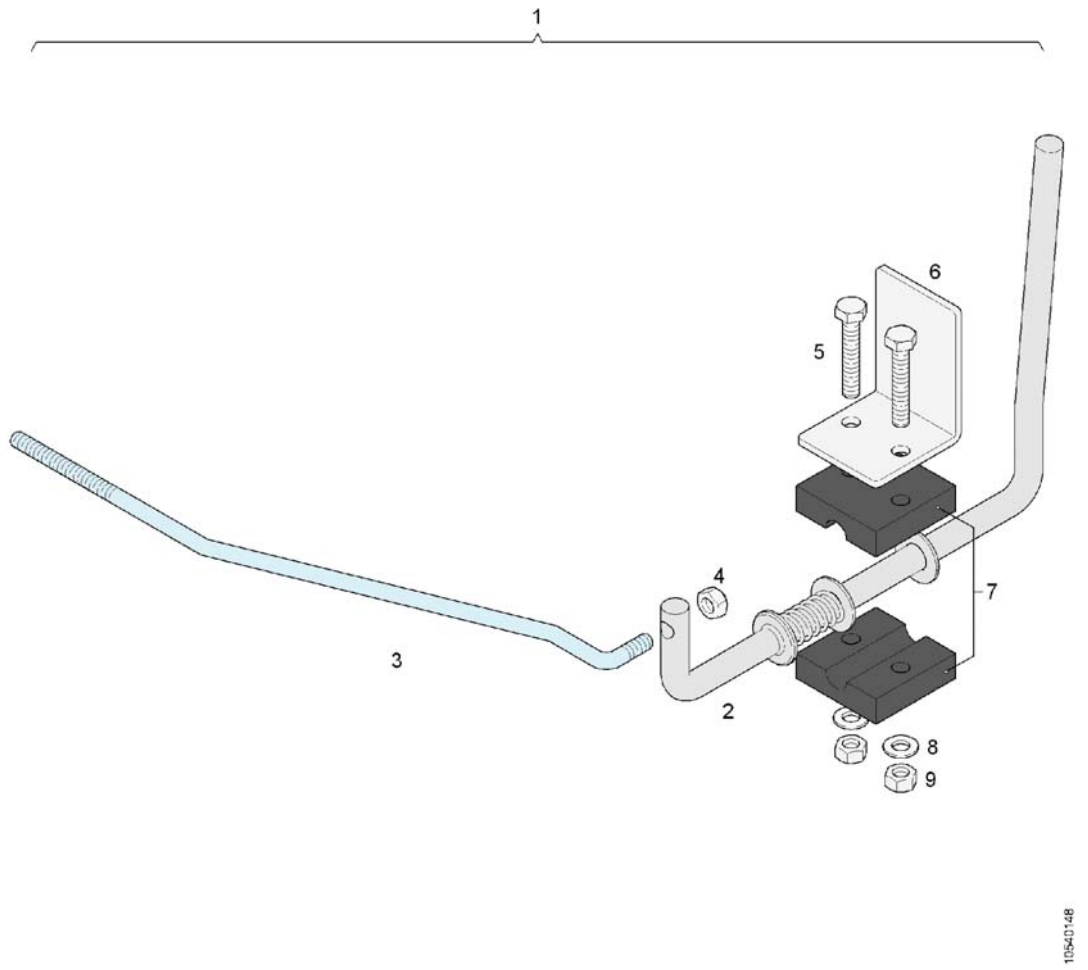

Pos.	Q.	Part n°	Description	Specification
1	1	91100792	Latch	
		-		
2	*1	10701560	Lever	
3	*1	10724170	Rod	
4	*1	660209935	Lock nut	DIN 980 M6 MAT:IN
5	*2	660229758	Screw	DIN 933 M6x1x35 MAT:IN
6	*1	91100793	Bracket	
7	*1	10701650	Mounting bracket	MAT:P
8	*2	660623507	Washer	DIN 125 6,4x12,5x1,6 MAT:IN
9	*2	660209922	Nut	DIN 934 M6x1 MAT:IN

Rear bumper

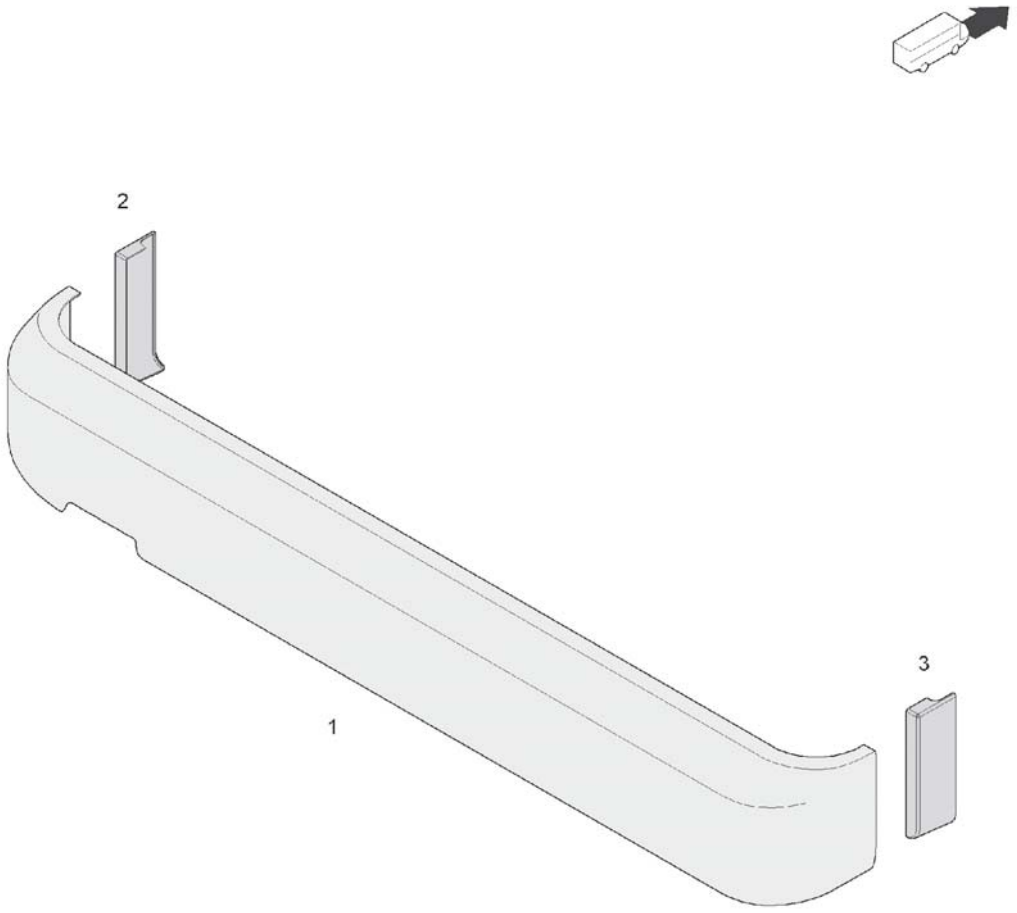

Pos.	Q.	Part n°	Description	Specification
1	1	11093019	Bumper	THERMOPLASTIC
2	1	11053931	Protection shield	Li
3	1	11053932	Protection shield	Re

Rear bumper

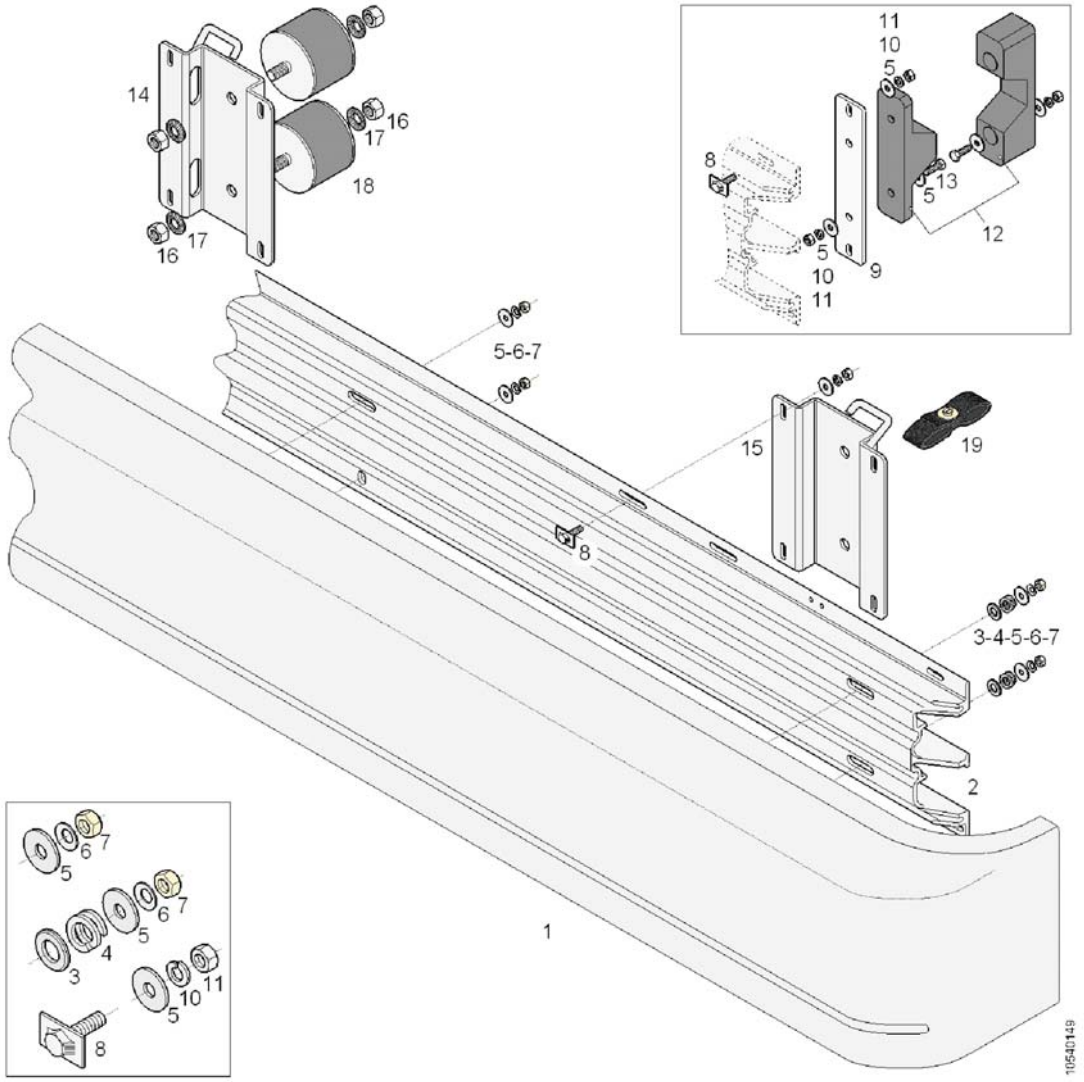

Pos.	Q.	Part n°	Description	Specification
1	1	»1054.01-5...	Rear bumper	
2	1	10732465	Bracket	
3	4	660629106	Washer	DIN 125 A13 MAT:IN
4	4	11255213	Spring	
5	34	660625907	Washer	DIN 9021 A8,4 MAT:IN
6	6	10745959	Coil spring lock washer	DIN 2093 A16x8,2x0,9 MAT:IN
7	6	660207107	Lock nut	DIN 980 M8x1,25 k.=8
8	12	10617317	Fastener	M8x30
9	2	10704549	Sheet	
10	20	660636402	Coil spring lock washer	DIN 127 A8 MAT:IN
11	20	660209923	Nut	DIN 934 M8x1,25 MAT:IN
12	2	10686296	Buffer stop	70 Shore A
13	8	660229805	Screw	DIN 933 M8x1,25x25 MAT:IN
14	1	10732471	Bracket	Li
15	1	10732472	Bracket	Re
16	8	10621821	Nut	DIN 934 M16x1.5 MAT:IN
17	8	10580795	Coil spring lock washer	A16
18	4	10683452	Rubber-metal mount	70 Shore A Ø100mm M16

Rear bumper

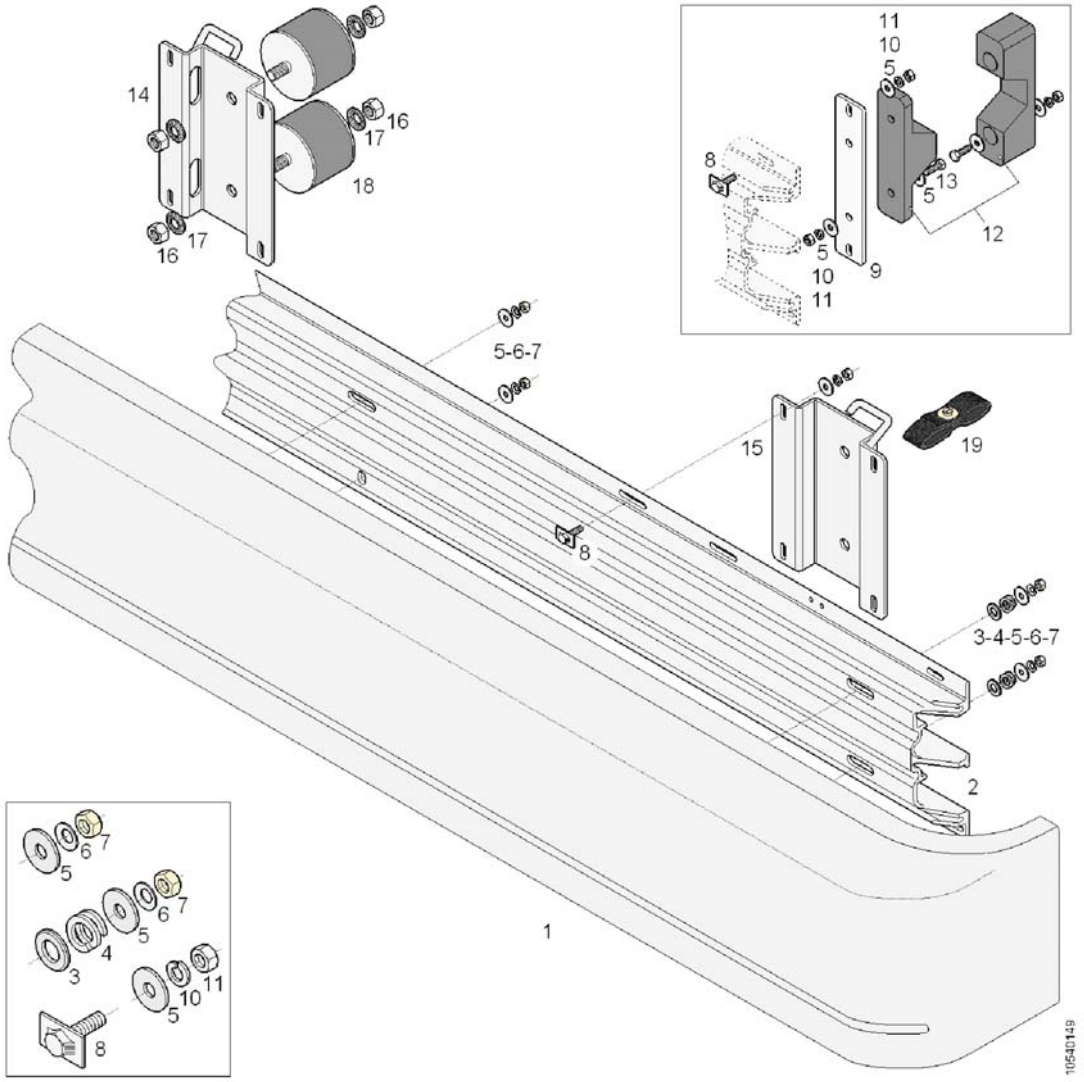

Pos.	Q.	Part n°	Description	Specification
19	2	10723651	Strap	

Exterior trim

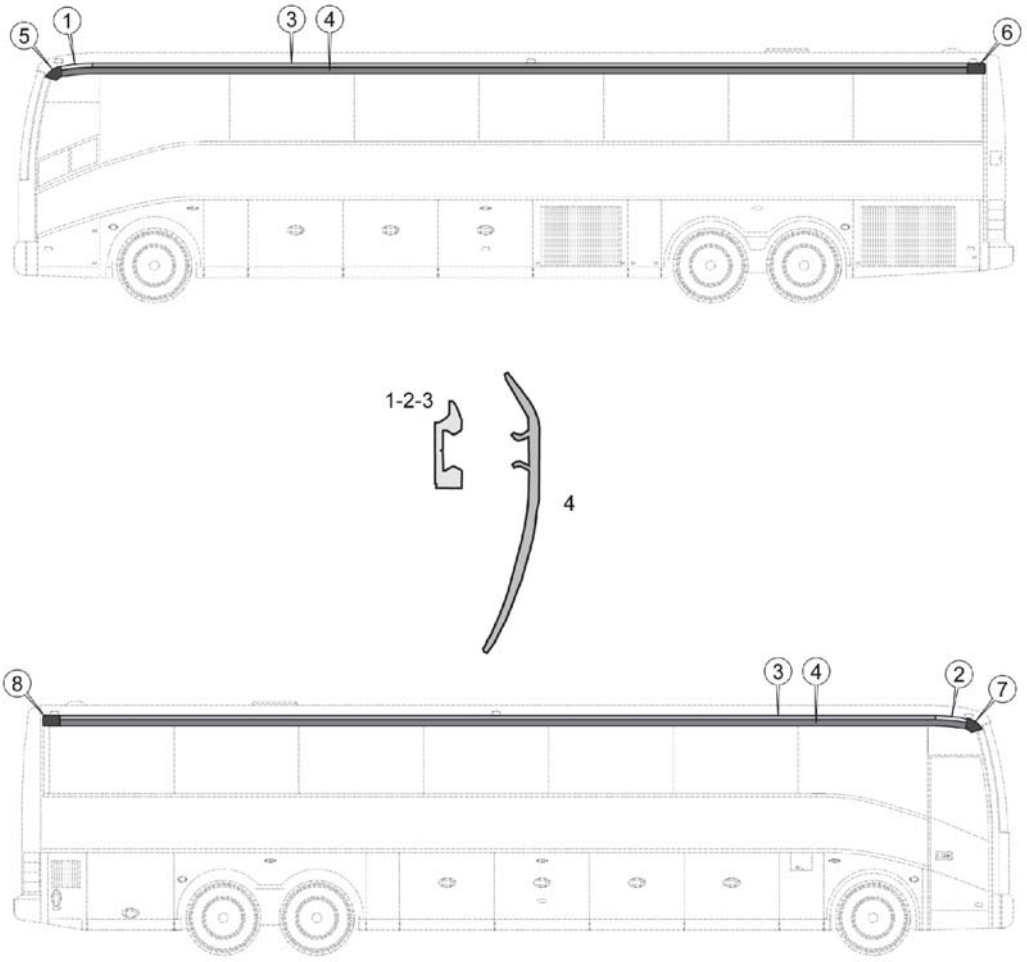

Pos.	Q.	Part n°	Description	Specification
1	1	10881455	Aluminium section	
2	1	10881464	Aluminium section	
3	#m	10948814	Aluminium section	l.=5000mm
4	#m	10835365	Section synthetic material	(RAL 9005) l.=13200
5	1	10859754	End part	MAT: ABS (RAL 9005)
6	1	10860446	End part	MAT: ABS (RAL 9005)
7	1	10859759	End part	MAT: ABS (RAL 9005)
8	1	10860450	End part	MAT: ABS (RAL 9005)

Rubrails

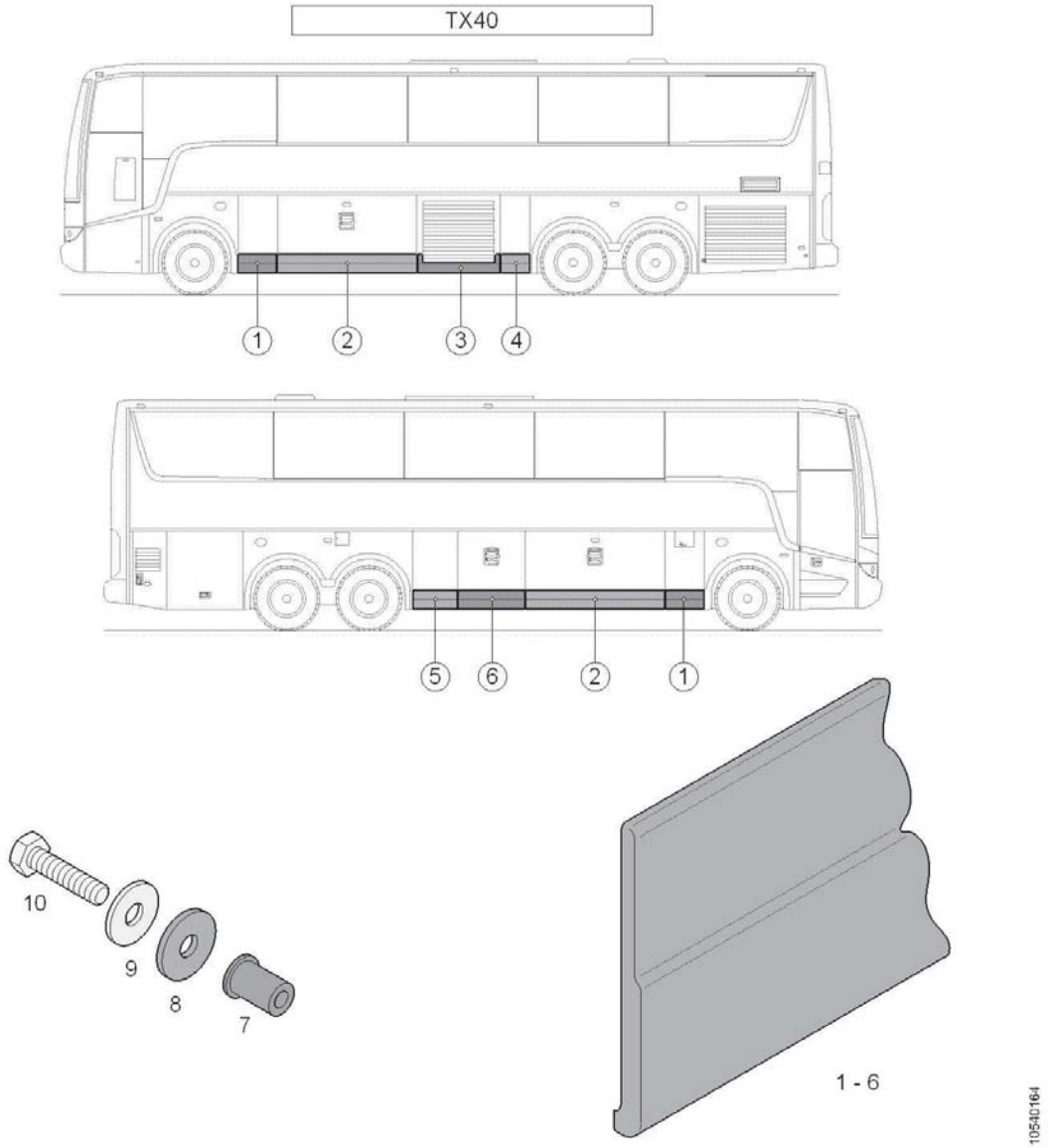

Pos.	Q.	Ref.N°	Description	Spec.
1	2	11371746	Rubrail	l.= 705mm MAT: ABS (RAL 9005)
2	2	11393412	Rubrail	l.=2200mm MAT: ABS (RAL 9005)
3	1	11371714	Rubrail	l.=1605mm MAT: ABS (RAL 9005)
4	1	11371785	Rubrail	l.=450mm MAT: ABS (RAL 9005)
5	1	11371730	Rubrail	l.=705mm MAT: ABS (RAL 9005)
6	1	11371809	Rubrail	l.=1050mm MAT: ABS (RAL 9005)
		-		
7	#	11260785	Plug	MAT: R
8	#	660635310	Ring	MAT:R Ø20xØ6,5x2mm
9	#	660623508	Washer	DIN 9021 M6 MAT:IN
10	#	660229755	Screw	DIN 933 M6x1x25mm MAT:IN

Rubrails

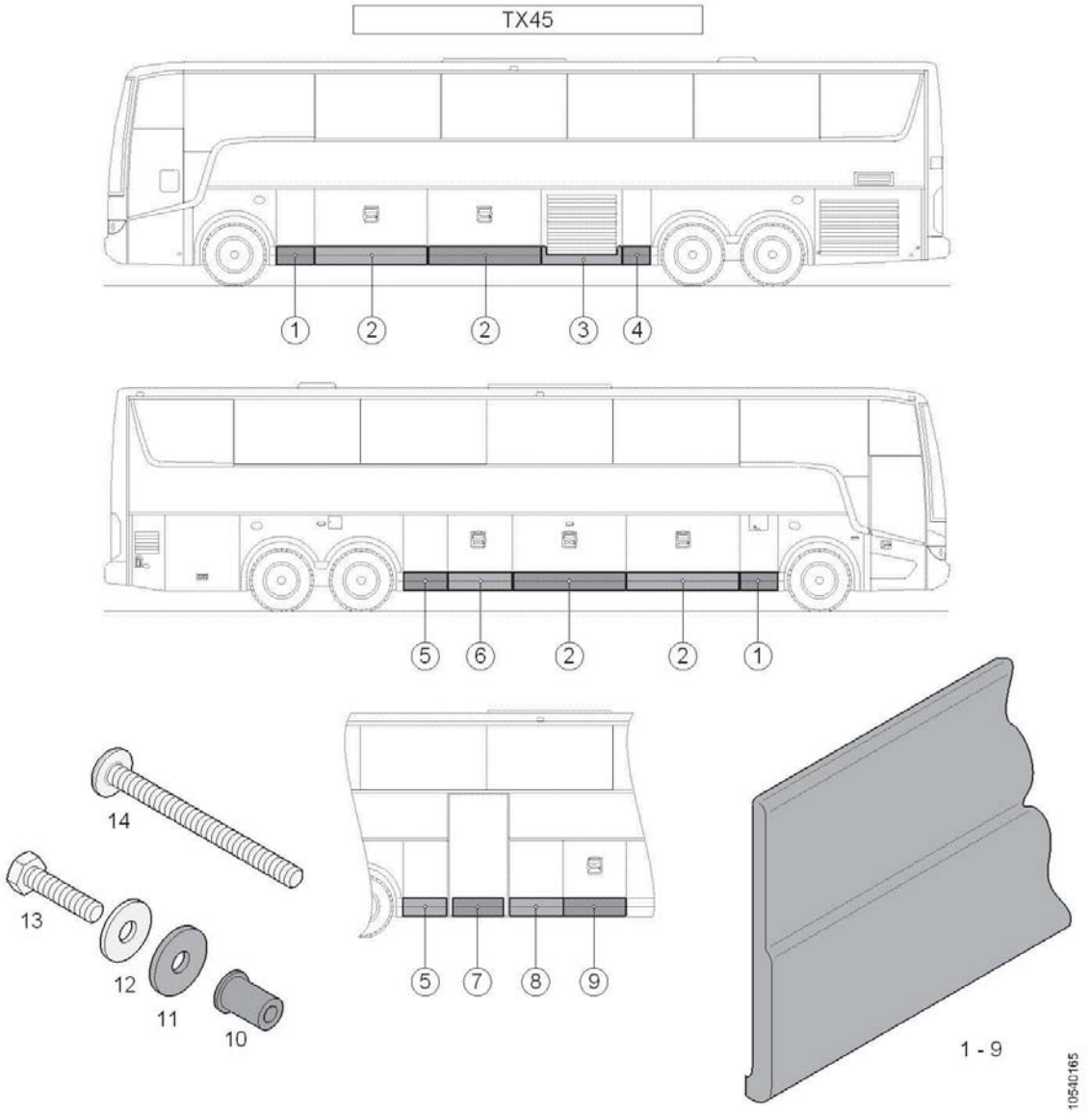

Pos.	Q.	Ref.N°	Description	Spec.
1	2	11371746	Rubrail	l.= 705mm MAT: ABS (RAL 9005)
2	4	11371670	Rubrail	l.=1830mm MAT: ABS (RAL 9005)
3	1	11371714	Rubrail	l.=1605mm MAT: ABS (RAL 9005)
4	1	11371785	Rubrail	l.=450mm MAT: ABS (RAL 9005)
5	1	11371730	Rubrail	l.=705mm MAT: ABS (RAL 9005)
6	1	11371809	Rubrail	l.=1050mm MAT: ABS (RAL 9005)
		-		
7	1	11222225	Rubrail	l.=830mm MAT: ABS (RAL 9005)
8	1	11393405	Rubrail	l.=875mm MAT: ABS (RAL 9005)
9	1	10705859	Rubrail	l.=1014mm MAT: ABS (RAL 9005)
		-		
10	#	11260785	Plug	MAT: R
11	#	660635310	Ring	MAT:R Ø20xØ6,5x2mm
12	#	660623508	Washer	DIN 9021 M6 MAT:IN
13	#	660229755	Screw	DIN 933 M6x1x25mm MAT:IN
14	2	660200522	Screw	M6x70 MAT:IN

Decorative strips

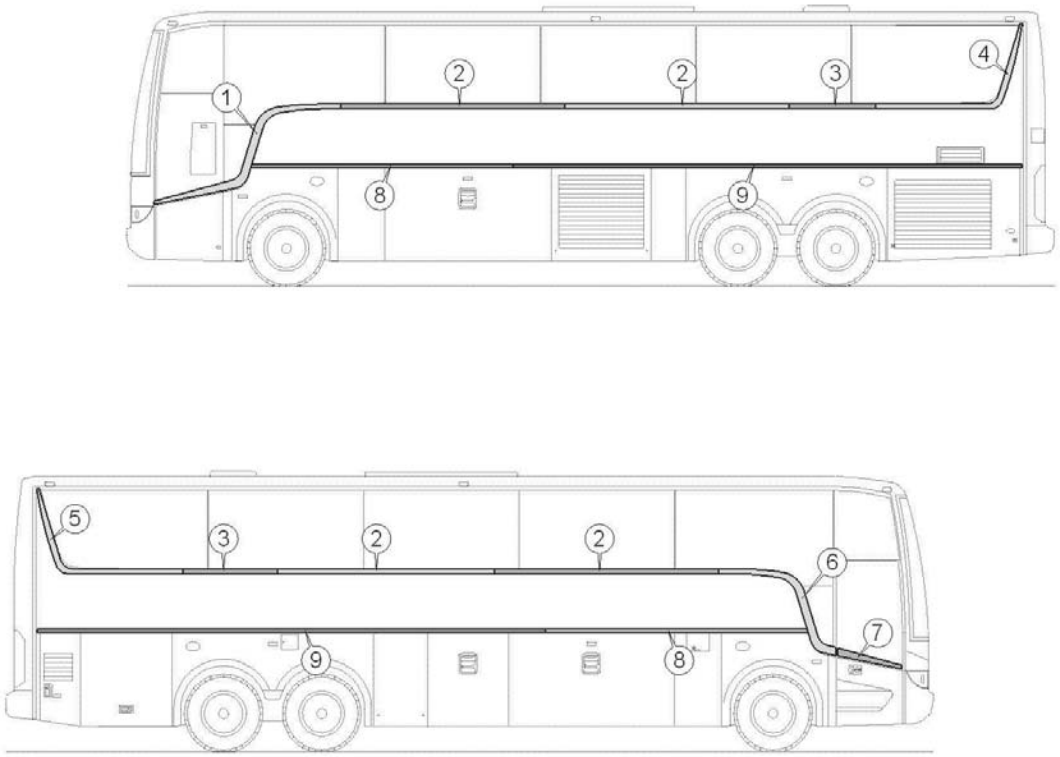

Pos.	Q.	Ref.N°	Description	Spec.
1	1	92104460	Decorative strip	MAT: IN
2	4	92103647	Decorative strip	2970x64x1.5 MAT: IN
3	2	92105056	Decorative strip	2500x64x1.5 MAT: IN
4	1	92104178	Decorative strip	MAT: IN
5	1	92104179	Decorative strip	MAT: IN
6	1	92104461	Decorative strip	MAT: IN
7	1	92104462	Decorative strip	MAT: IN
8	2	11375675	Decorative strip	l.=3500 MAT: AL
9	2	11248306	Decorative strip	l.=6800 MAT: AL

Decorative strips

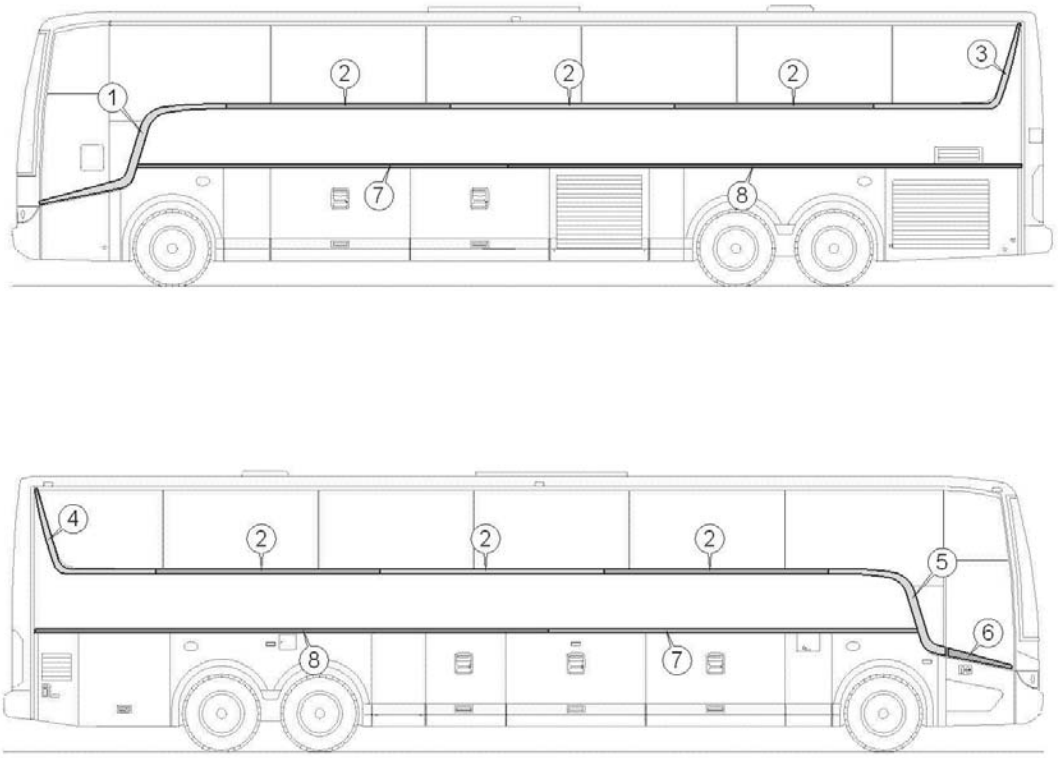

10540168

Pos.	Q.	Ref.N°	Description	Spec.
1	1	92104460	Decorative strip	MAT: IN
2	6	92103647	Decorative strip	2970x64x1.5 MAT: IN
3	1	92104178	Decorative strip	MAT: IN
4	1	92104179	Decorative strip	MAT: IN
5	1	92104461	Decorative strip	MAT: IN
6	1	92104462	Decorative strip	MAT: IN
7	2	11342810	Decorative strip	l.=4950 MAT: AL
8	2	11248306	Decorative strip	l.=6800 MAT: AL

Decorative strips

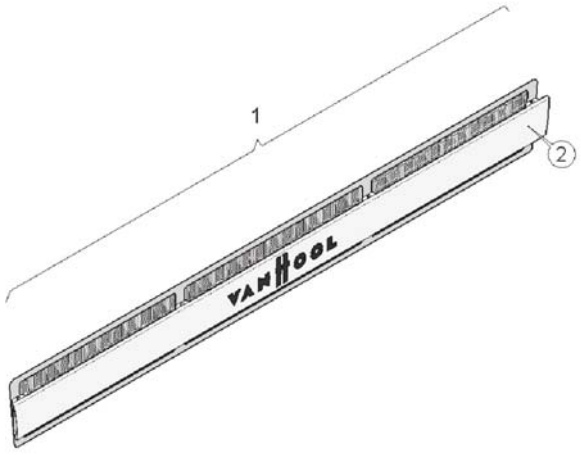

10540163

Pos.	Q.	Part n°	Description	Specification
1	1	11374383	Grille	
2	*1	11374384	Decorative strip	
		-		
3	1	»1066.01-35..	Rear access door	

Emblem

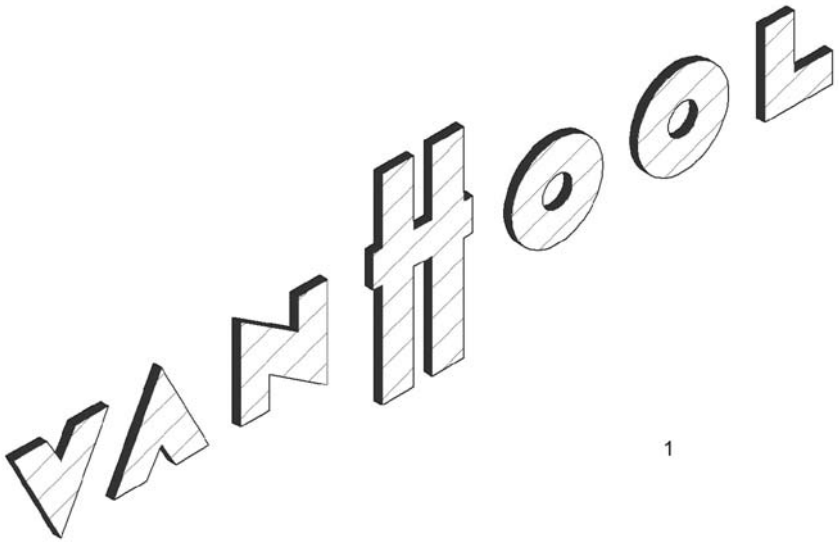

Pos.	Q.	Part n°	Description	Specification
1	1	11238449	VAN HOOL name plate, self-adhesive	720x176/80mm [Chrome]

Grille

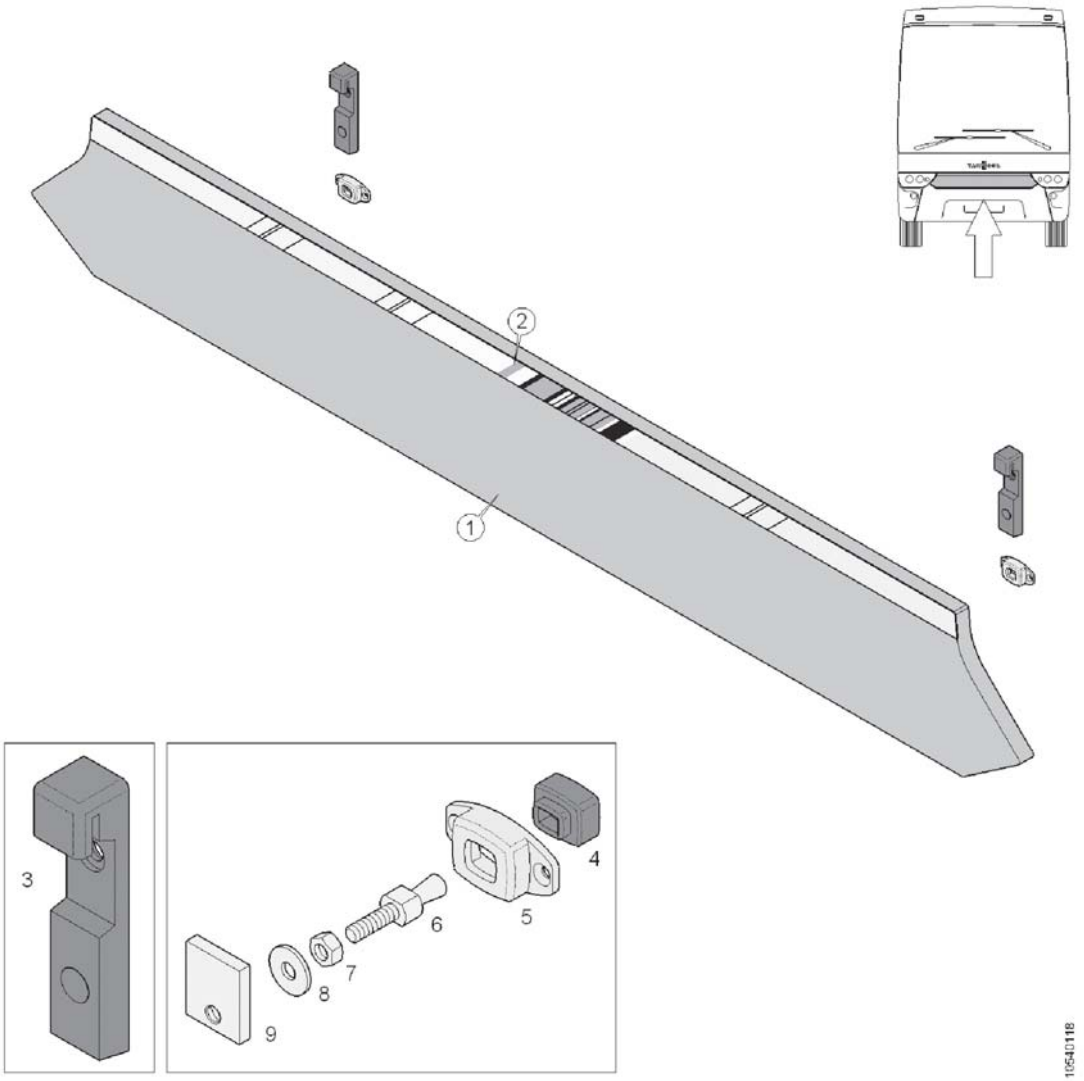

Pos.	Q.	Part n°	Description	Specification
1	1	11248112	Grille	
2	1	11291675	Trim strip	
		-		
3	2	660155513	Mounting bracket	MAT: R
4	2	660116105	Stop	MAT: R
5	2	660116107	Holder	MAT: AL
6	2	11282961	Pivot pin	M6 MAT: IN
7	2	660209922	Nut	DIN 934 M6x1 MAT:IN
8	2	660623508	Washer	DIN 9021 M6 MAT:IN
9	2	11282964	Fastener	M6 MAT: IN

Lock

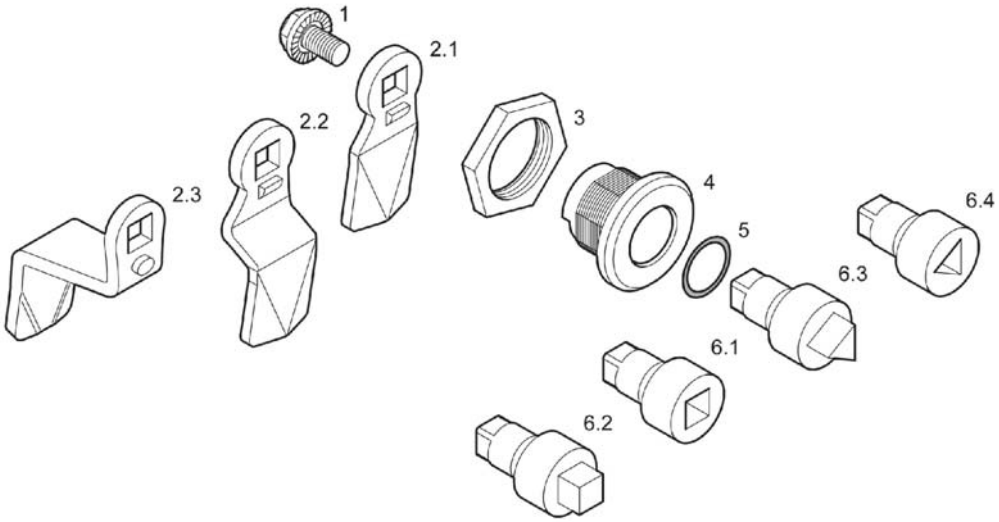

Pos.	Q.	Part n°	Description	Specification
1	1	10562228	Coil spring lock washer	
2.1	1	10526357	Latch	
2.2	1	10526351	Latch	
2.3	1	10511555	Latch	
3	1	10561589	Nut	M 22
4	1	10511539	Housing	
5	1	10511405	Ring	
6.1	1	10511543	Control	7mm
6.2	1	10511400	Control	8mm
6.3	1	10657960	Control	8mm
6.4	1	10610645	Control	

Upholstery: mounting material

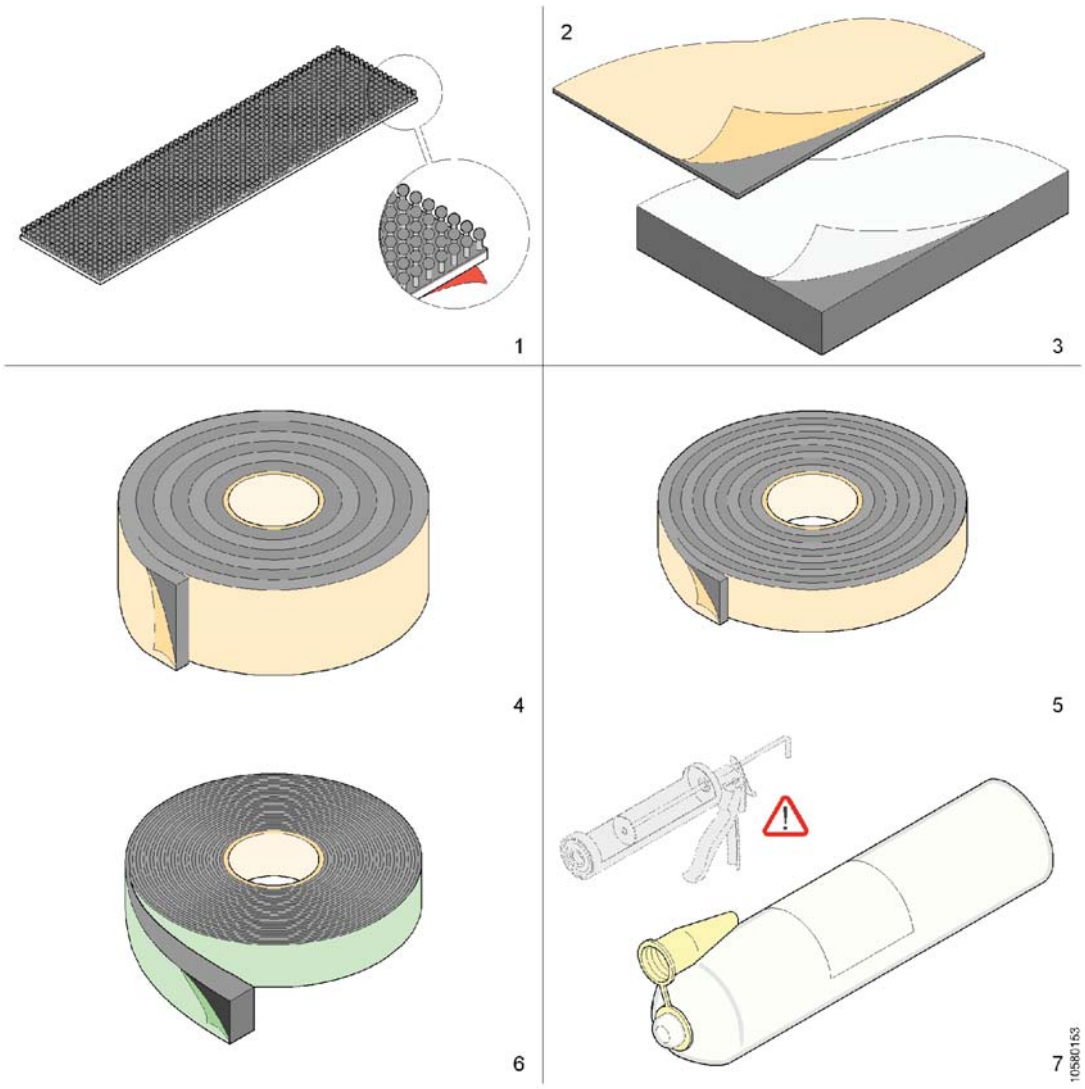

Pos.	Q.	Part n°	Description	Specification
1	#m	10554546	Velcro	b.=25mm MAT: P
2	#m²	660128401	Insulating material: self-adhesive	MAT: BITUMEN d.=1,5
3	#m²	660128772	Insulating material: self-adhesive	S15 MAT: PU Absorbel
4	#m	660066001	Foam rubber	30x5 l.=20m
5	#m	660193600	Adhesive tape	MAT: BUTYL 15x3,3 l.=13m
6	#m	660066852	Insulating tape, expanding	15x10 l.=25m
7	#	10521585	Sealing compound	MAT: SIL (Z) 400ml
	#	660193008	Sealing compound	MAT: SIL (GS) 310cc
	#	660193031	Sealing compound	MAT: SIL (W) 310cc

Steering column

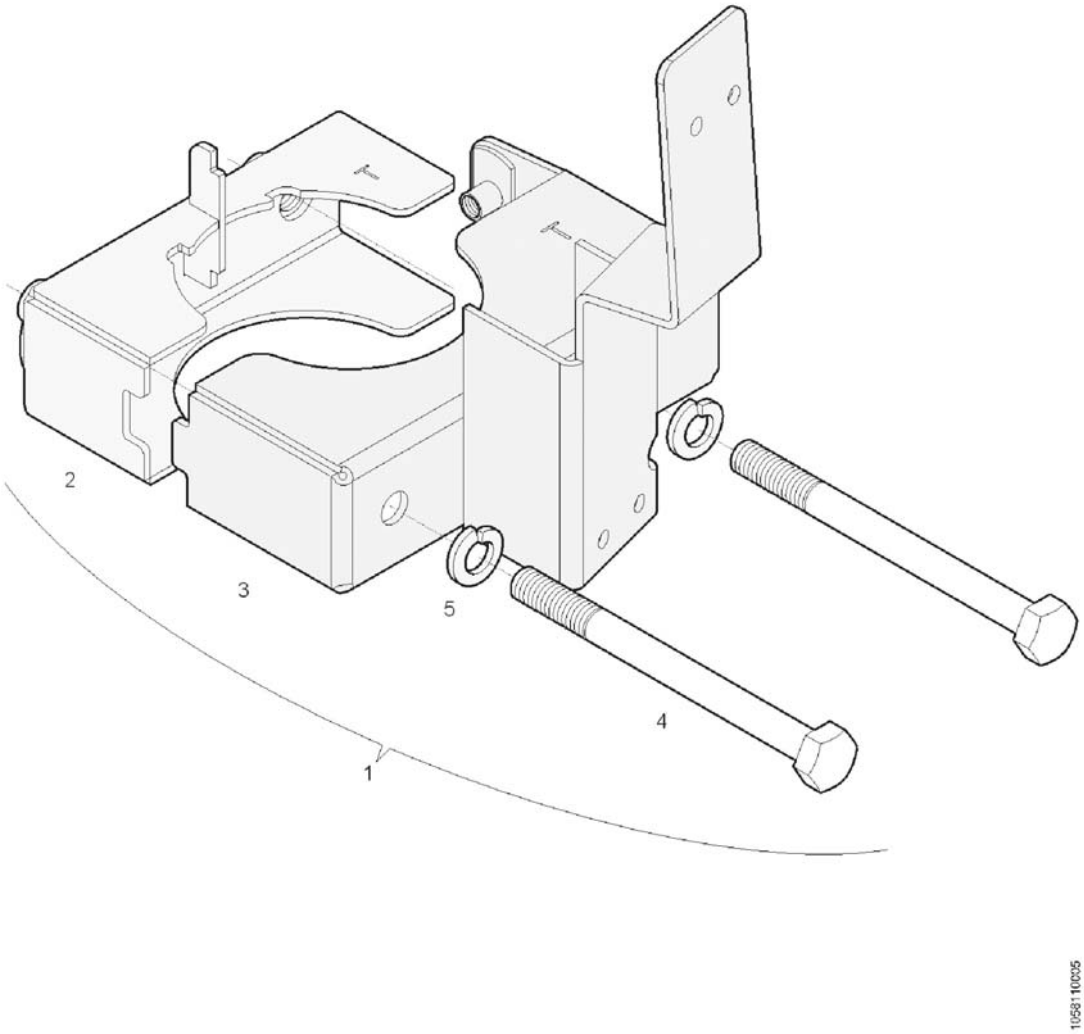

Pos.	Q.	Part n°	Description	Specification
1	1	11290831	Holder	
2	*1	10992375	Fastener	
3	*1	11290816	Fastener	
4	*2	660241301	Screw	DIN 931 M6x1,00x70 k.=8.8
5	*2	660636300	Coil spring lock washer	DIN 127 Ø6

Steering column

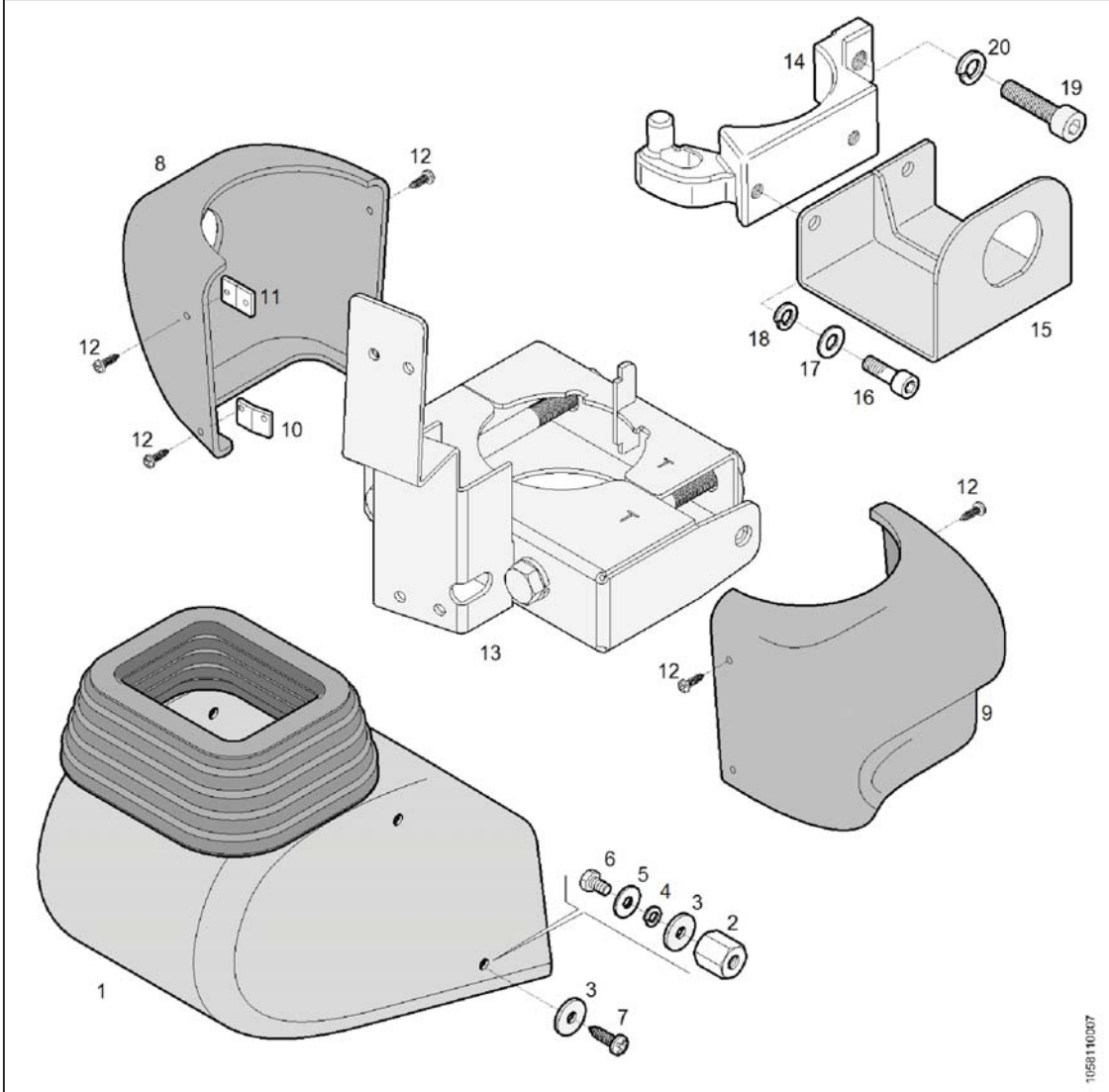

Pos.	Q.	Part n°	Description	Specification
1	1	11216782	Protection shield	(RAL 9005)
2	4	11077366	Threaded ring	M6 l.=18mm
3	8	10881249	Ring	MAT:P Ø22x6,4
4	6	660636300	Coil spring lock washer	DIN 127 Ø6
5	4	660623501	Washer	DIN 9021 6,4x18x1,6
6	4	660220102	Screw	DIN 933 M6x1x10 k.=8.8
7	4	660299541	Screw	DIN 7991 M6x1x16mm MAT:IN
8	1	11176816	Protection shield	(RAL 9005)
9	1	11244979	Protection shield	(RAL 9005)
10	1	10970212	Mounting bracket	167°
11	1	10970206	Mounting bracket	179°
12	4	10979488	Screw	M4x12 k.=10.9
	2	10979487	Screw	M4x6 k.=10.9
13	1	11290831	Holder	
14	1	10993095	Fastener	
15	1	11306890	Bracket	
16	2	660290091	Screw	DIN 912 M4x0,7x10 k.=8.8
17	2	660621200	Washer	DIN 125 4,3x9x0,8

Steering column

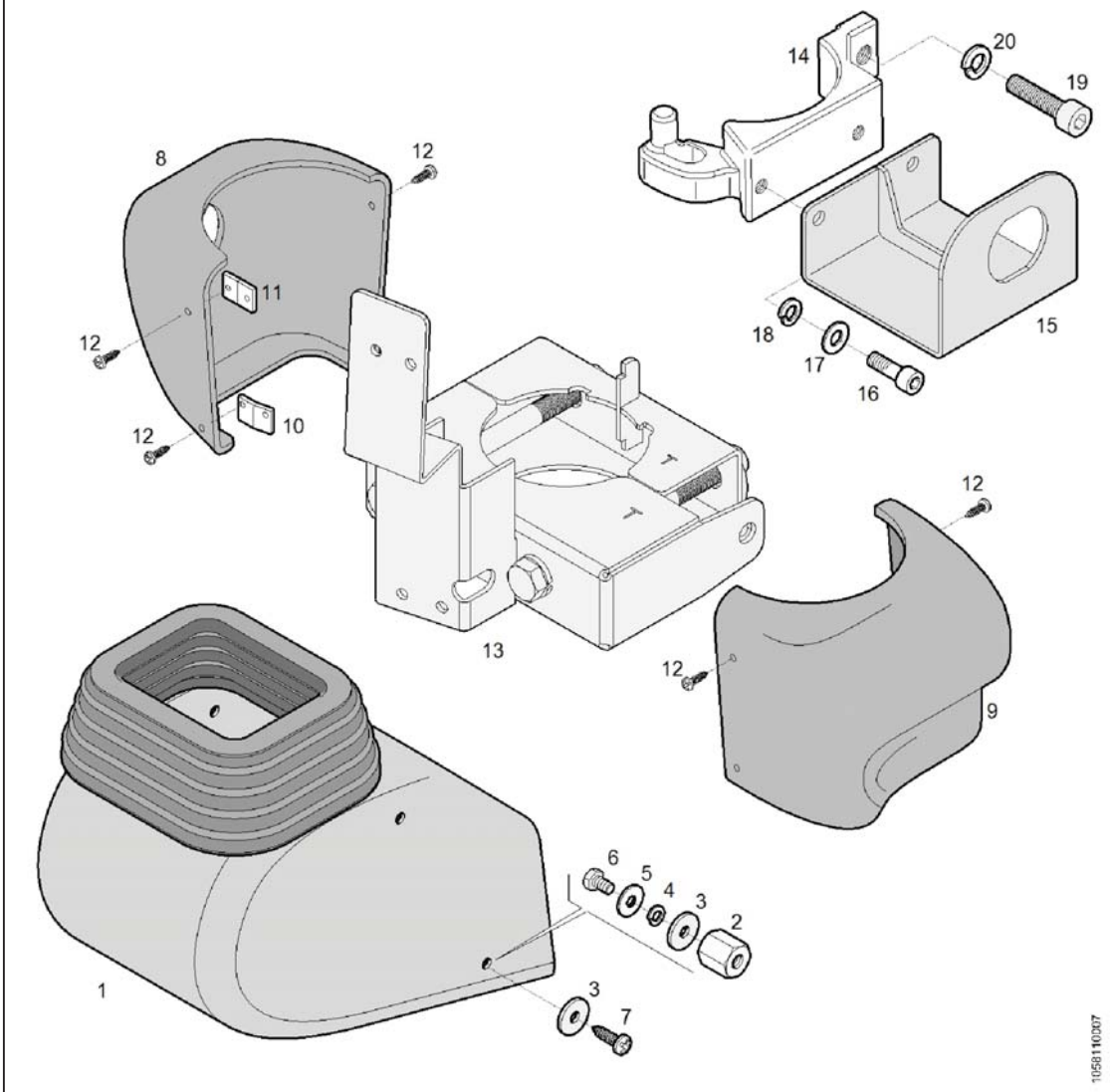

Pos.	Q.	Part n°	Description	Specification
18	2	660636100	Coil spring lock washer	DIN 127 M4
19	1	10534851	Screw	DIN 912 M5x0,8x20 k.=8.8
20	1	660636200	Coil spring lock washer	DIN 127 A5 (5,1x9,2x1,2)

Passenger door 1: door rubbers

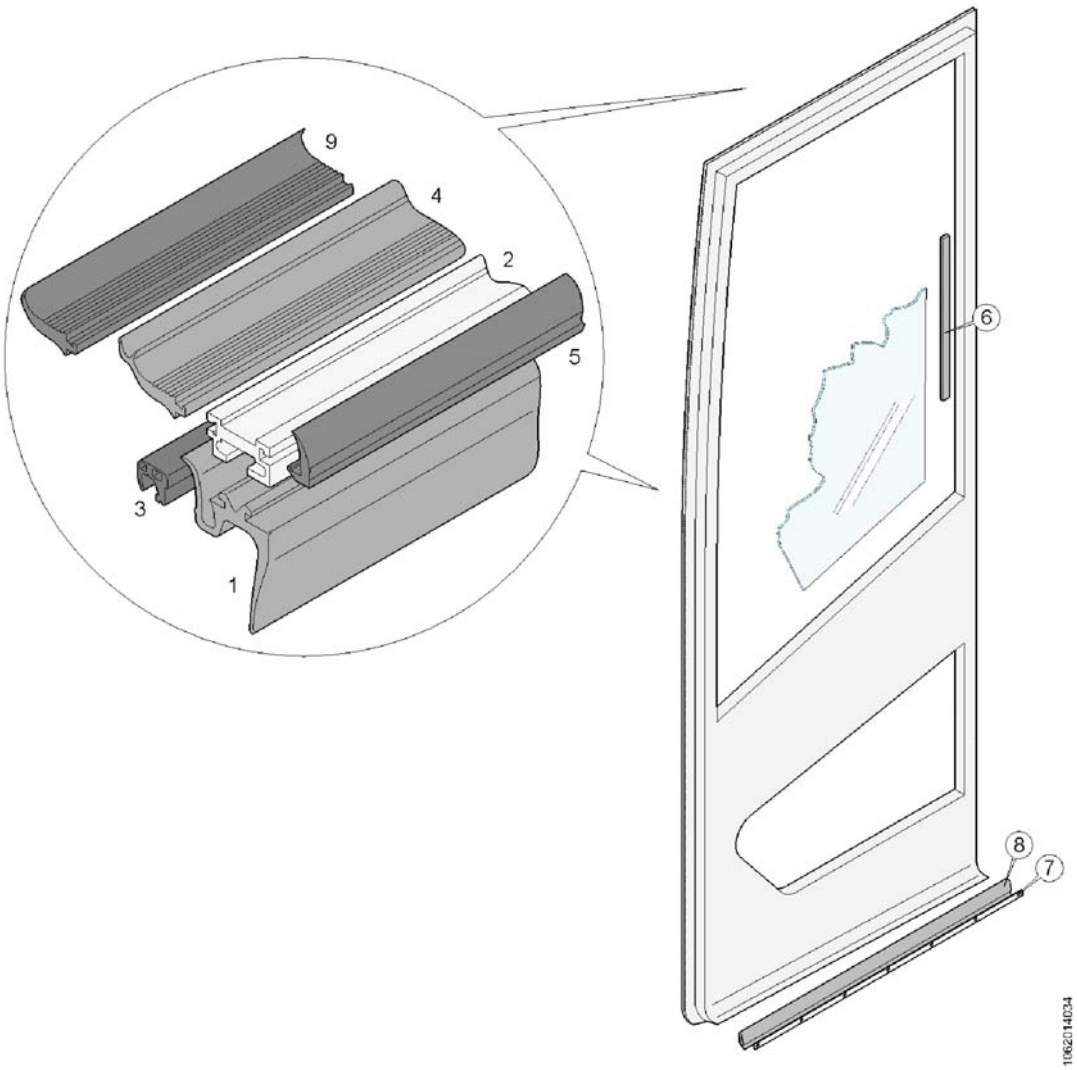

Pos.	Q.	Part n°	Description	Specification
1	1	11284989	Rubber section	
2	1	11284988	Aluminium section	
3	1	11284990	Sensitive edge	
4	1	11088699	Rubber section	l.=3,5m
5	#m	10670195	Rubber section	
6	1	11049967	Rubber section	
7	1	11286468	Aluminium section	
8	3	10706810	Rubber section	
9	1	11282509	Rubber section	

Passenger door 1: control

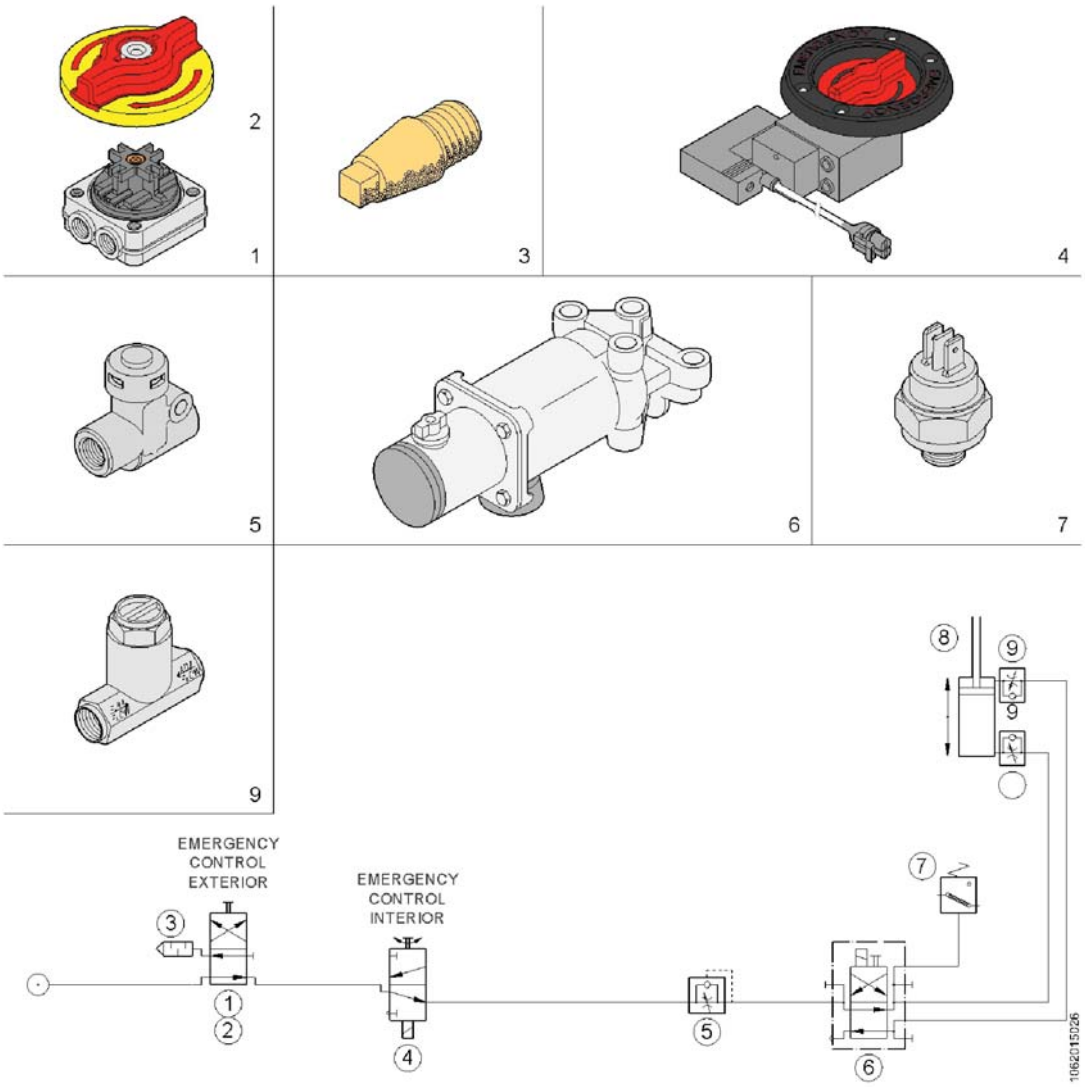

Pos.	Q.	Part n°	Description	Specification
1	1	637210710	Cock	
2	1	637410980	Button	
3	1	10856423	Muffler	M10x1mm
4	1	11326264	Emergency release valve	
5	1	660528021	Restriction valve	
6	1	11102170	Solenoid valve	4/2
	*1	11285567	Repair kit	
7	1	637201150	Pressure Switch	NO 4 bar
8	1	»1062.01-2...	Mechanism	
9	2	10935170	Flow reducing valve	M12x1,5 - Ø6

Side access doors (TX40)

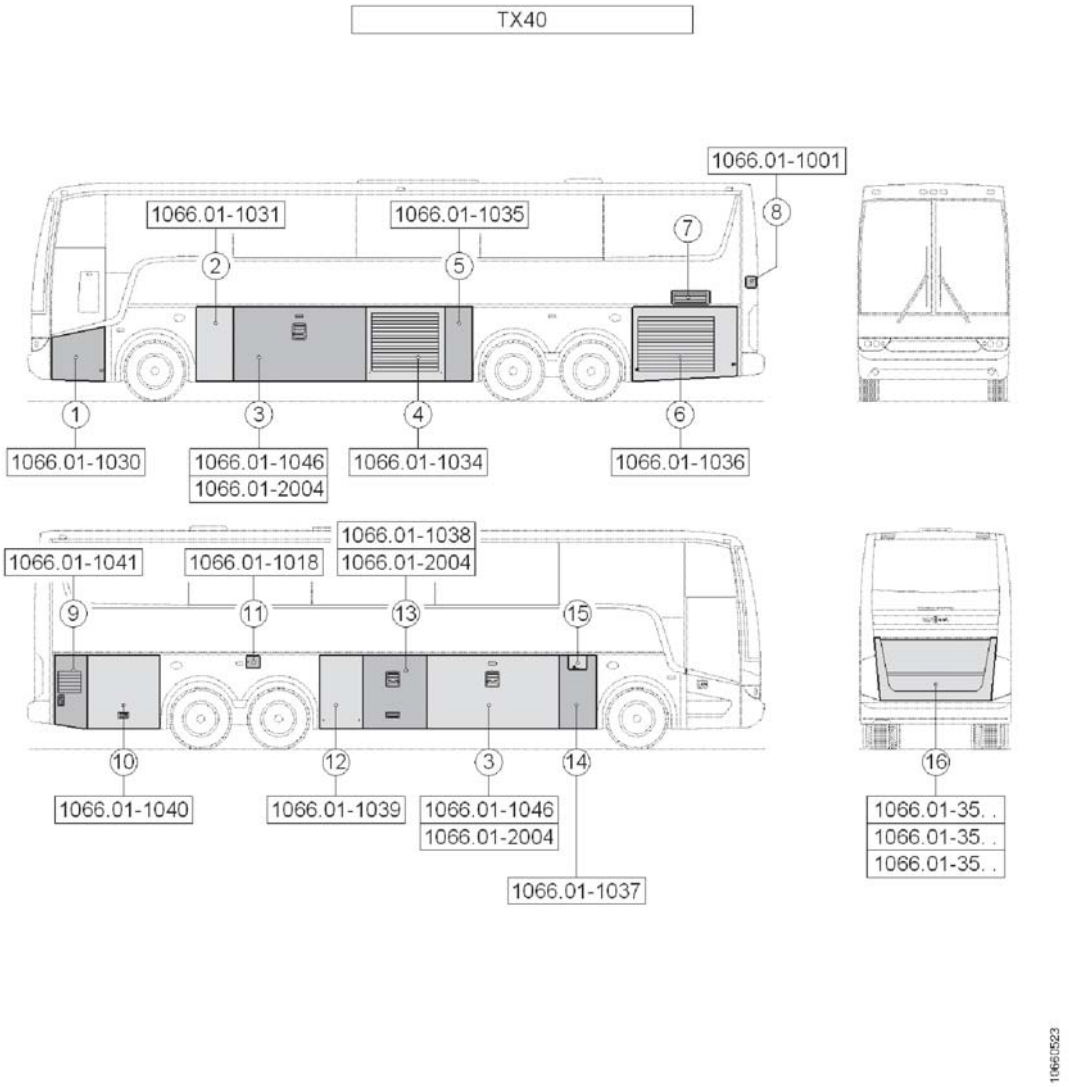

Pos.	Q.	Part n°	Description	Specification
1	1	11386925	Access door; without accessories	
2	1	11386926	Access door; without accessories	
3	2	11398936	Access door; without accessories	
4	1	11386929	Access door; without accessories	
5	1	11386930	Access door; without accessories	
6	1	11386931	Access door; without accessories	
7	1	90607836	Grille	
8	1	11282569	Access door; without accessories	
9	1	11386932	Access door; without accessories	
10	1	11386933	Access door; without accessories	
11	1	90611456	Access door; without accessories	
12	1	11386934	Access door; without accessories	
13	1	11386935	Access door; without accessories	
14	1	11386936	Access door; without accessories	
15	1	10593581	Access door; without accessories	
16	1	11341164	Access door; without accessories	

Side access doors (TX45)

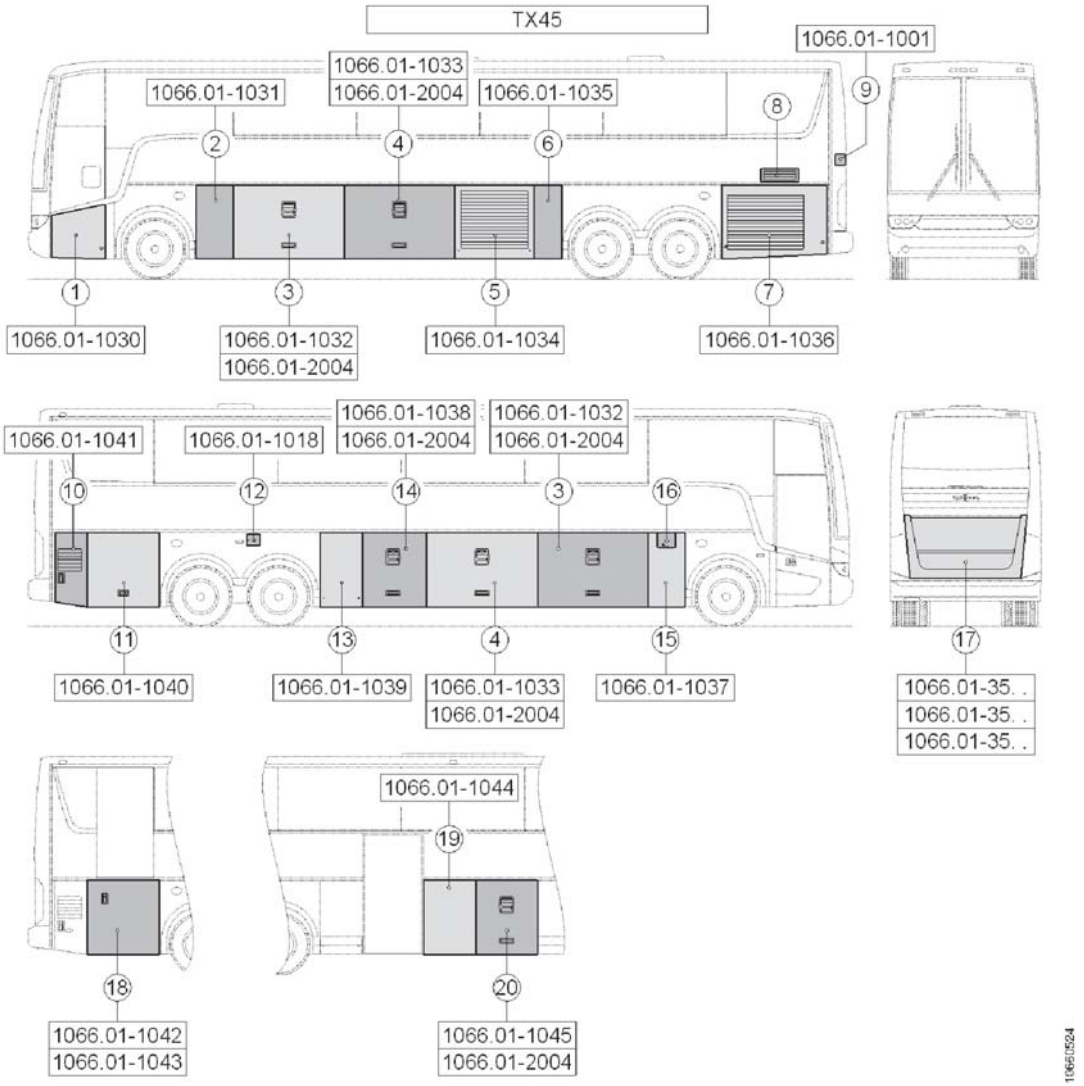

Pos.	Q.	Part n°	Description	Specification
1	1	11386925	Access door; without accessories	
2	1	11386926	Access door; without accessories	
3	2	11386927	Access door; without accessories	
4	2	11386928	Access door; without accessories	
5	1	11386929	Access door; without accessories	
6	1	11386930	Access door; without accessories	
7	1	11386931	Access door; without accessories	
8	1	90607836	Grille	
9	1	11282569	Access door; without accessories	
10	1	11386932	Access door; without accessories	
11	1	11386933	Access door; without accessories	
12	1	90611456	Access door; without accessories	
13	1	11386934	Access door; without accessories	
14	1	11386935	Access door; without accessories	
15	1	11386936	Access door; without accessories	
16	1	10593581	Access door; without accessories	
17	1	11341164	Access door; without accessories	
18	1	90611421	Access door; without accessories	

Side access doors (TX45)

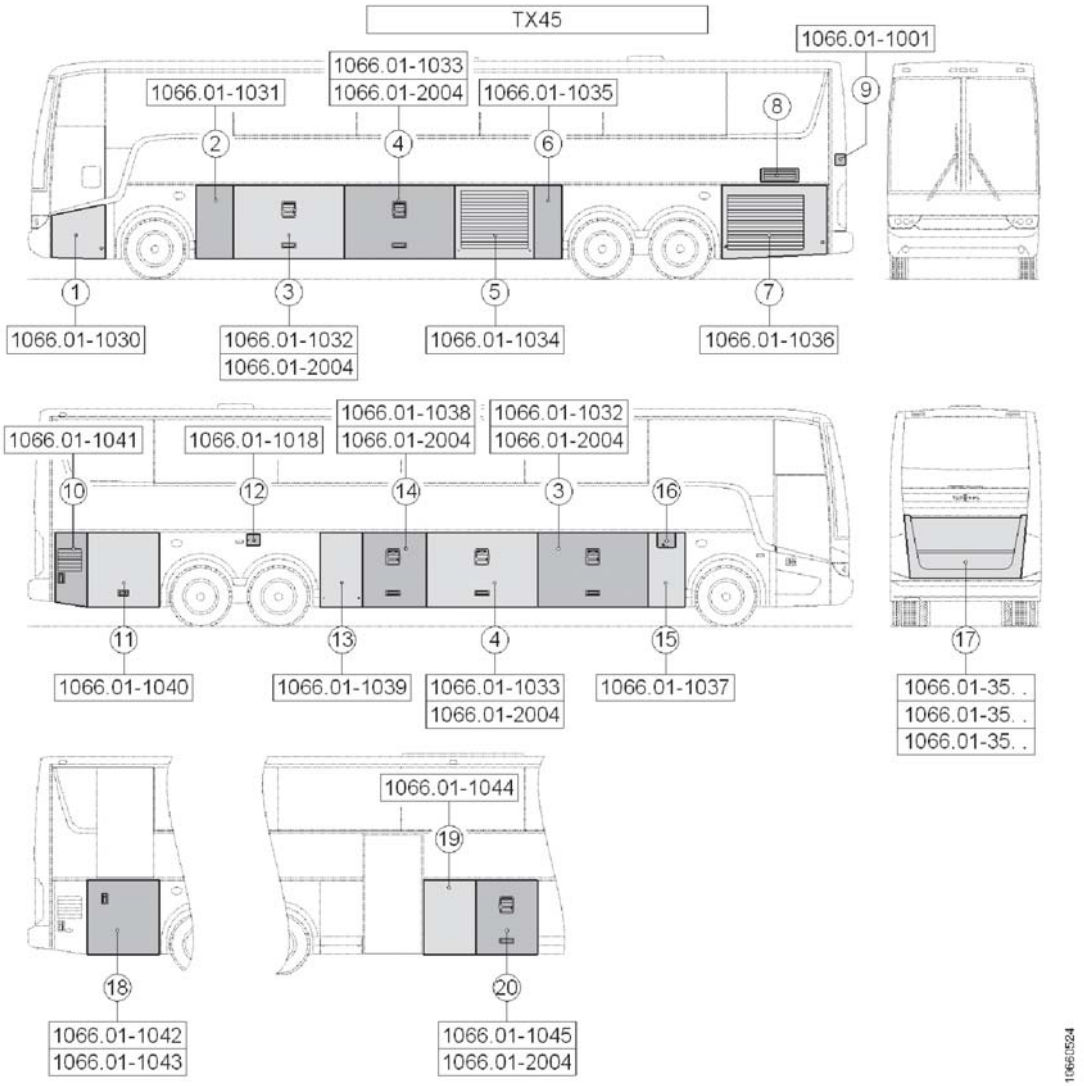

Pos.	Q.	Part n°	Description	Specification
19	1	11386937	Access door; without accessories	
20	1	11386938	Access door; without accessories	

Side access door + accessories

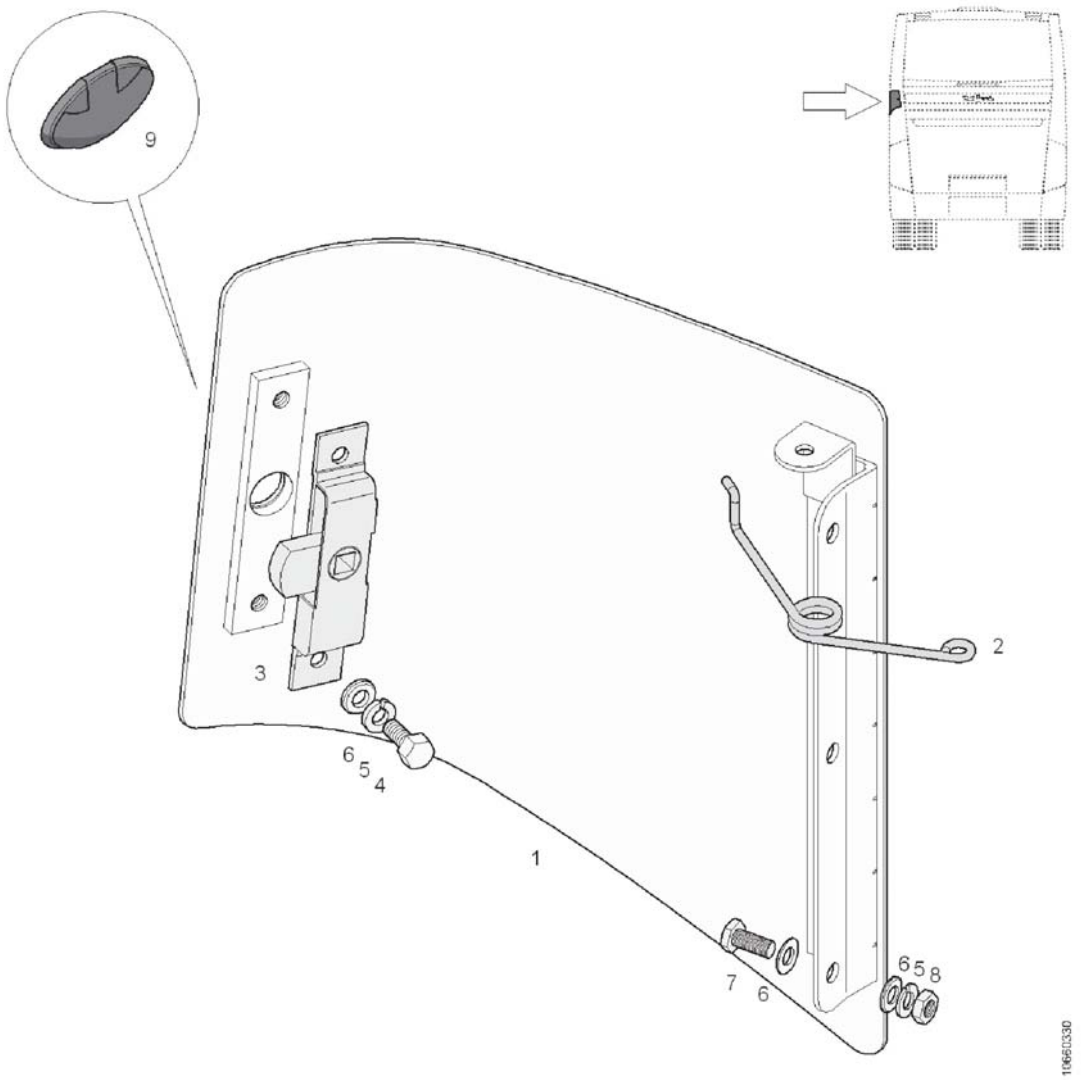

Pos.	Q.	Part n°	Description	Specification
1	1	11282569	Access door; without accessories	
2	1	629100650	Spring	
3	1	660171710	Lock	19x100 Re MAT:IN
4	2	660229751	Screw	DIN 933 M6x1x10 MAT:IN
5	5	660636302	Coil spring lock washer	DIN 127 A6 MAT:IN
6	8	660623507	Washer	DIN 125 6,4x12,5x1,6 MAT:IN
7	3	660229754	Screw	DIN 933 M6x1x20 MAT:IN
8	3	660209922	Nut	DIN 934 M6x1 MAT:IN
9	1	10945181	Protection	

Side access door + accessories

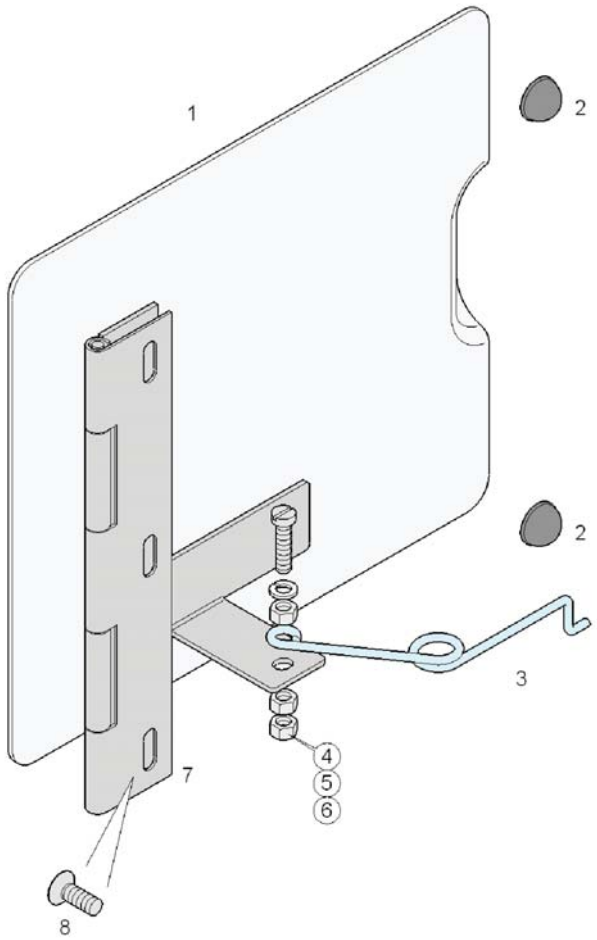

Pos.	Q.	Part n°	Description	Specification
1	1	90611456	Access door; without accessories	
2	2	10561091	Stop	MAT:R (Z)
3	1	660142132	Spring	
4	1	660284970	Screw	DIN 84 M5 X 20 MAT:IN
5	1	660636202	Coil spring lock washer	DIN 127 A5 MAT:IN
6	3	660209936	Nut	DIN 934 M5 MAT:IN
7	1	90610752	Hinge	
8	3	660299541	Screw	DIN 7991 M6x1x16mm MAT:IN

Side access door + accessories

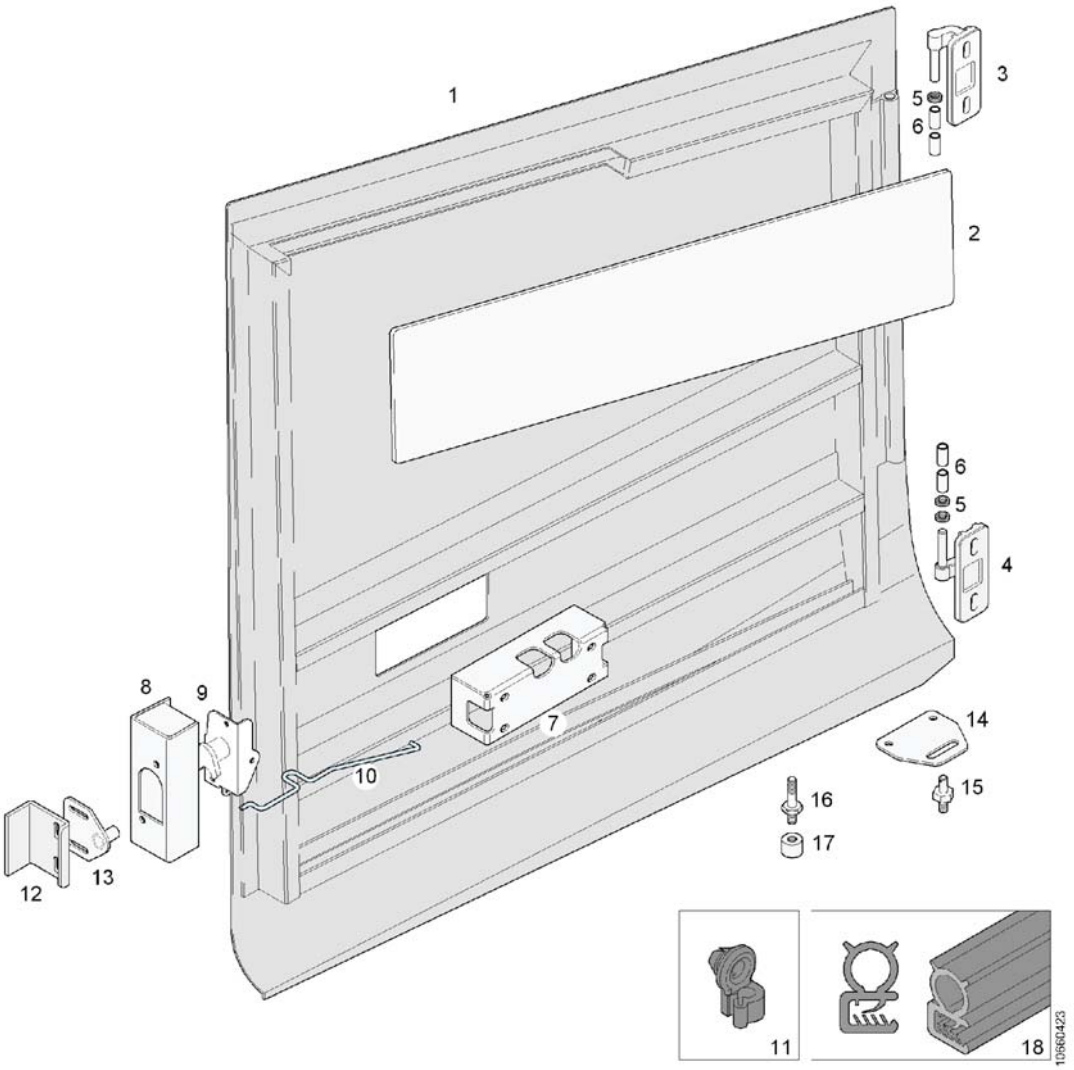

Pos.	Q.	Part n°	Description	Specification
1	1	11386925	Access door; without accessories	
2	1	90612231	Reinforcement	MAT: AL
3	1	10668879	Hinge	Li
4	1	10668881	Hinge	Re
5	3	10644411	Washer	MAT:P 13.5x8.1x3
6	4	10609177	Bushing	MAT:IN Ø10xØ8 l.=20mm
7	1	90600726	Bracket	
8	1	90611583	Bracket	
9	1	660170421	Latch	
10	1	90612140	Rod	
11	2	10652072	Keeper	
12	1	90611237	Bracket	
13	1	10958849	Cam	MAT:IN
14	1	10705113	Bracket	
15	1	643405080	Pivot pin	M8 l.=40mm
16	1	660200804	Pin	M8
17	1	10603603	Threaded ring	M8-Ø20x15
18	#m	10667622	Rubber section	

Side access door + accessories

Pos.	Q.	Part n°	Description	Specification
1	1	11386926	Access door; without accessories	
2	1	10668881	Hinge	Re
3	1	10668879	Hinge	Li
4	2	10644411	Washer	MAT:P 13.5x8.1x3
5	4	10609177	Bushing	MAT:IN Ø10xØ8 l.=20mm
6	4	660229806	Screw	DIN 933 M8x30 MAT:IN
7	4	660625907	Washer	DIN 9021 A8,4 MAT:IN
8	4	660625806	Washer	DIN 125 A8,4 MAT:IN
9	4	660207107	Lock nut	DIN 980 M8x1,25 k.=8
10	#m	10667622	Rubber section	

Side access door + accessories

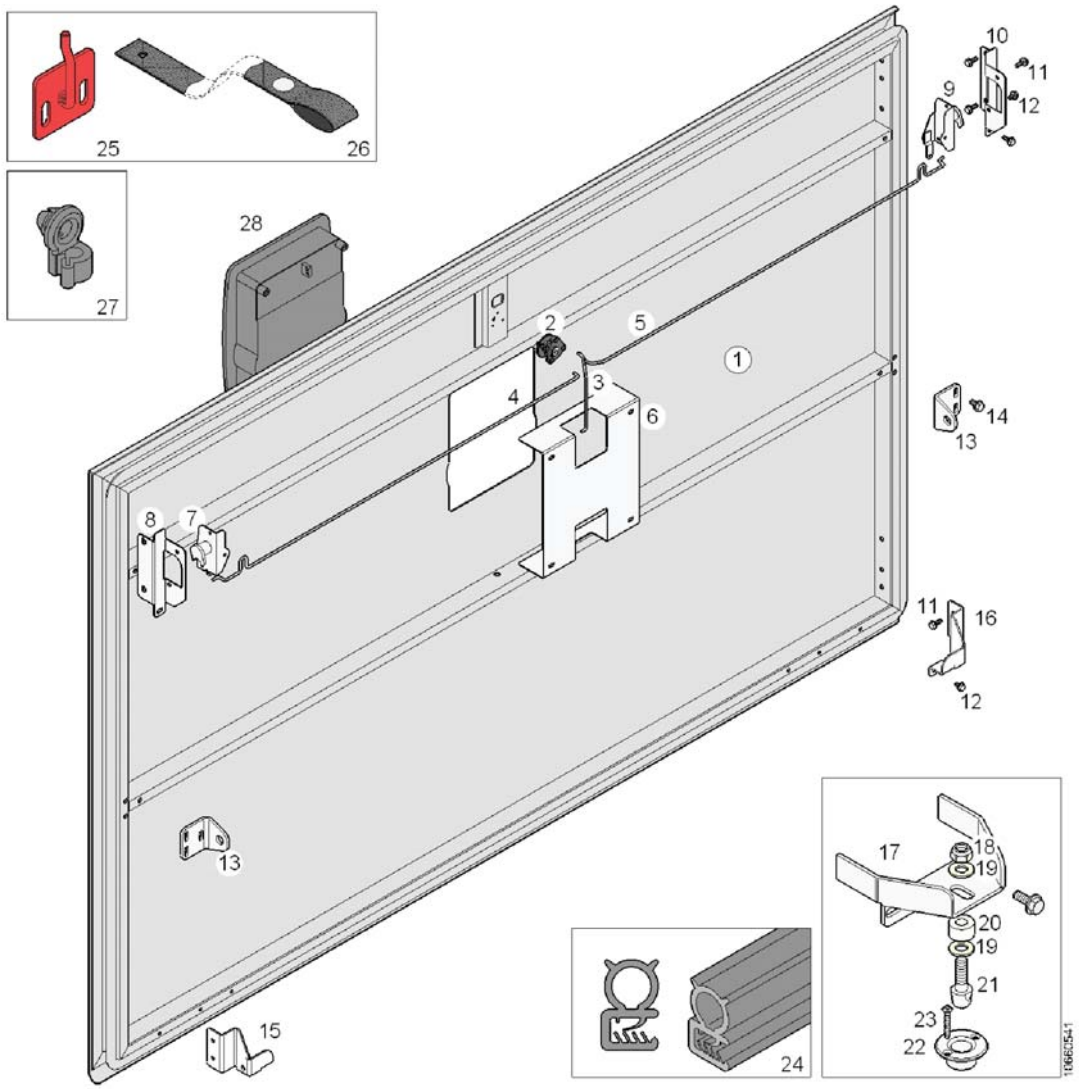

Pos.	Q.	Part n°	Description	Specification
1	1	11386927	Access door; without accessories	
2	1	»1066.01-7501	Rocker arm	
3	1	90612114	Rod	Ø4mm
4	1	90611153	Rod	Ø4mm
5	1	90611154	Rod	Ø4mm
6	1	10704825	Bracket	
7	1	660170421	Latch	
8	1	10704822	Bracket	
9	1	660170420	Latch	
10	1	10704821	Bracket	
11	16	660259008	Screw	M6x16
12	6	660259006	Screw	M6x10
13	2	90603998	Bracket	
14	6	10519579	Screw	M8x16 k.=8.8
15	1	10701167	Bracket	
16	1	10701166	Bracket	
17	2	10735820	Bracket	
18	2	660207100	Lock nut	DIN 985 M8x1,25 k.=8

Side access door + accessories

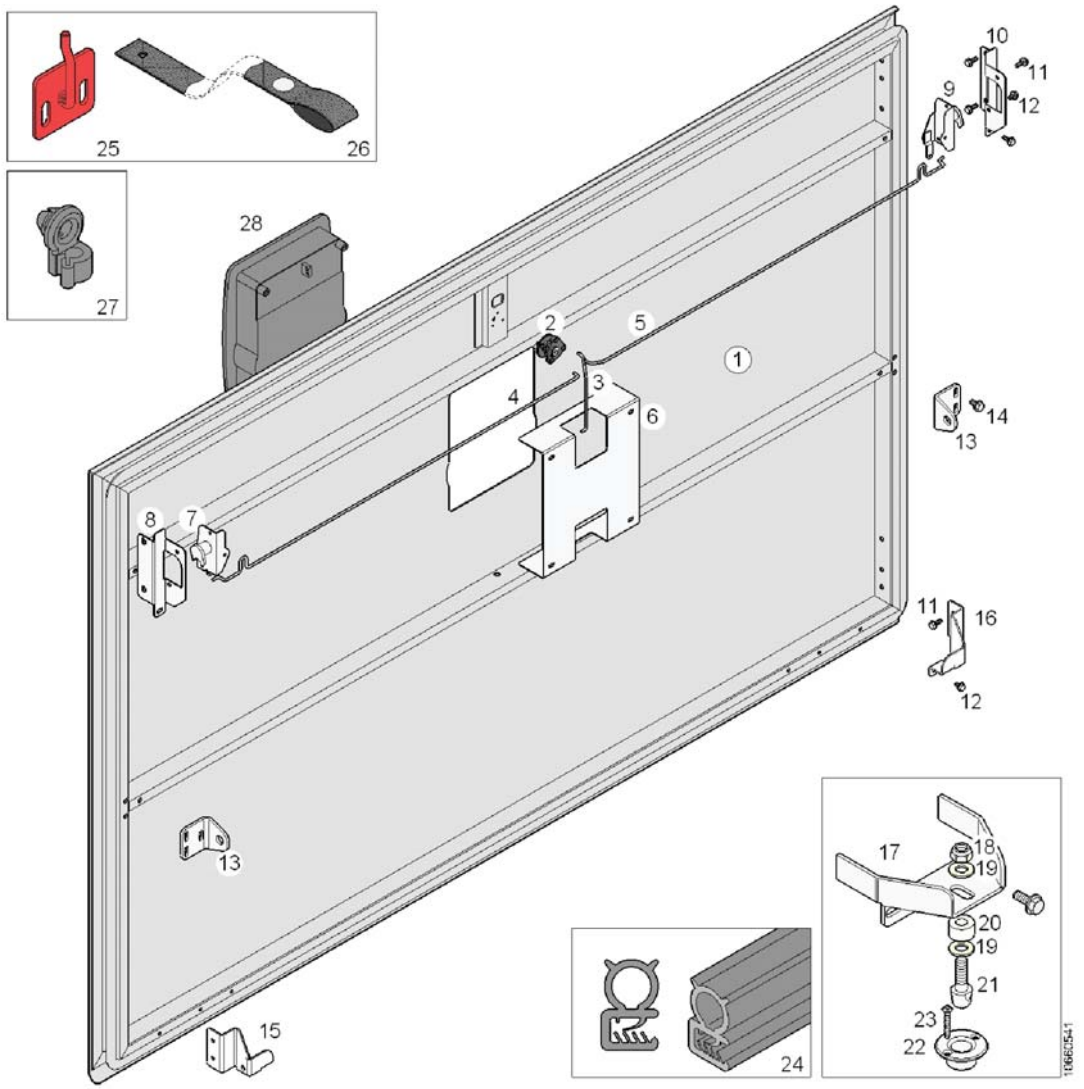

Pos.	Q.	Part n°	Description	Specification
19	4	660625805	Washer	DIN 125 A8,4x17x1,6
20	2	660634717	Spacer	MAT:P 8,5x18x10
21	2	10565541	Pin	l.=40mm
22	2	10704172	Bush	
23	4	660274125	Screw	DIN 7983 3,5x25mm
24	#m	10667622	Rubber section	
25	1	10852182	Bracket	(RAL 3000)
26	1	10622156	Strap	l.=350mm
27	#	10652072	Keeper	
28	#	»1066.01-7...	Lock	

Side access door + accessories

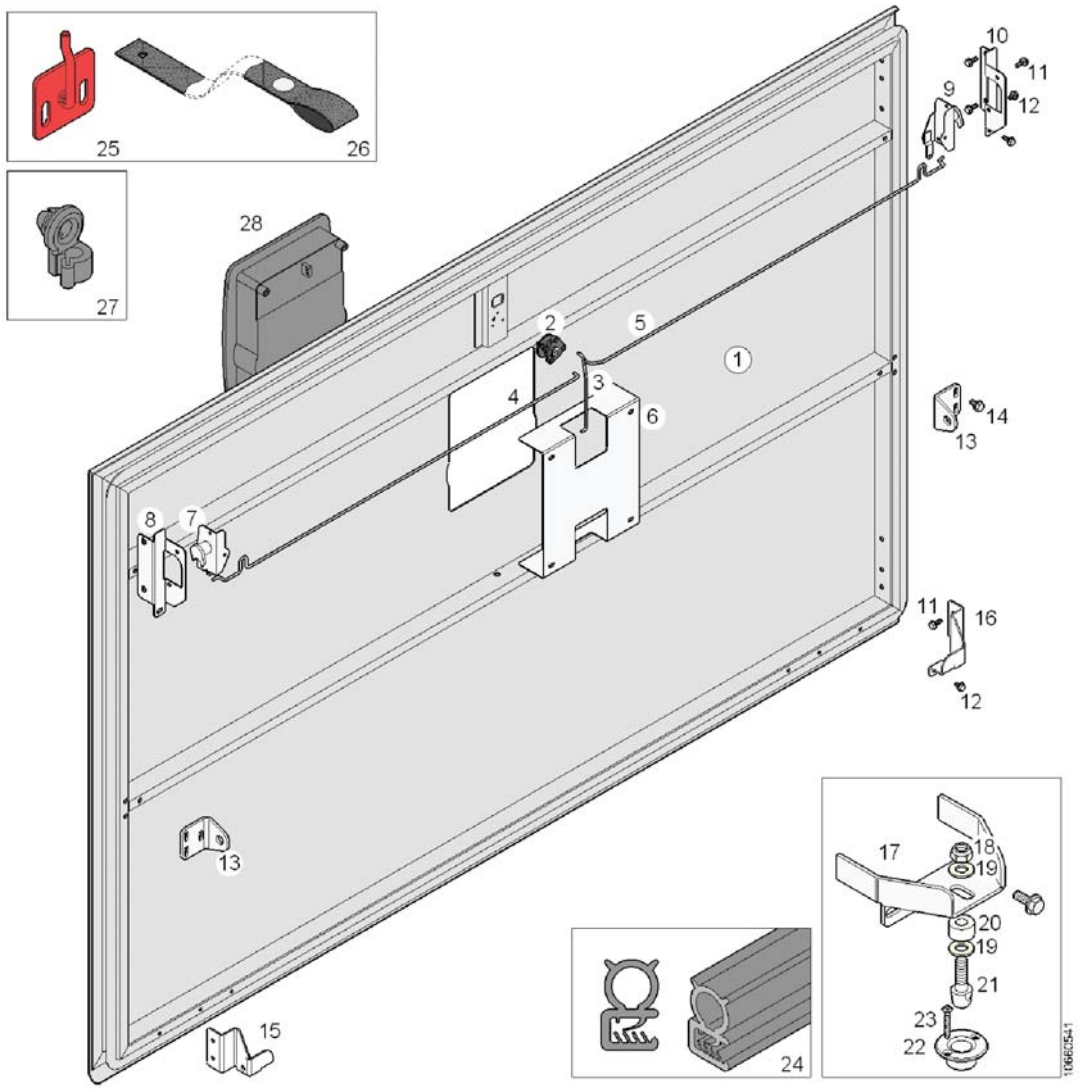

Pos.	Q.	Part n°	Description	Specification
1	1	11386928	Access door; without accessories	
2	1	»1066.01-7501	Rocker arm	
3	1	90612114	Rod	Ø4mm
4	1	90611153	Rod	Ø4mm
5	1	90611154	Rod	Ø4mm
6	1	10704825	Bracket	
7	1	660170421	Latch	
8	1	10704822	Bracket	
9	1	660170420	Latch	
10	1	10704821	Bracket	
11	16	660259008	Screw	M6x16
12	6	660259006	Screw	M6x10
13	2	90603998	Bracket	
14	6	10519579	Screw	M8x16 k.=8.8
15	1	10701167	Bracket	
16	1	10701166	Bracket	
17	2	10735820	Bracket	
18	2	660207100	Lock nut	DIN 985 M8x1,25 k.=8

Side access door + accessories

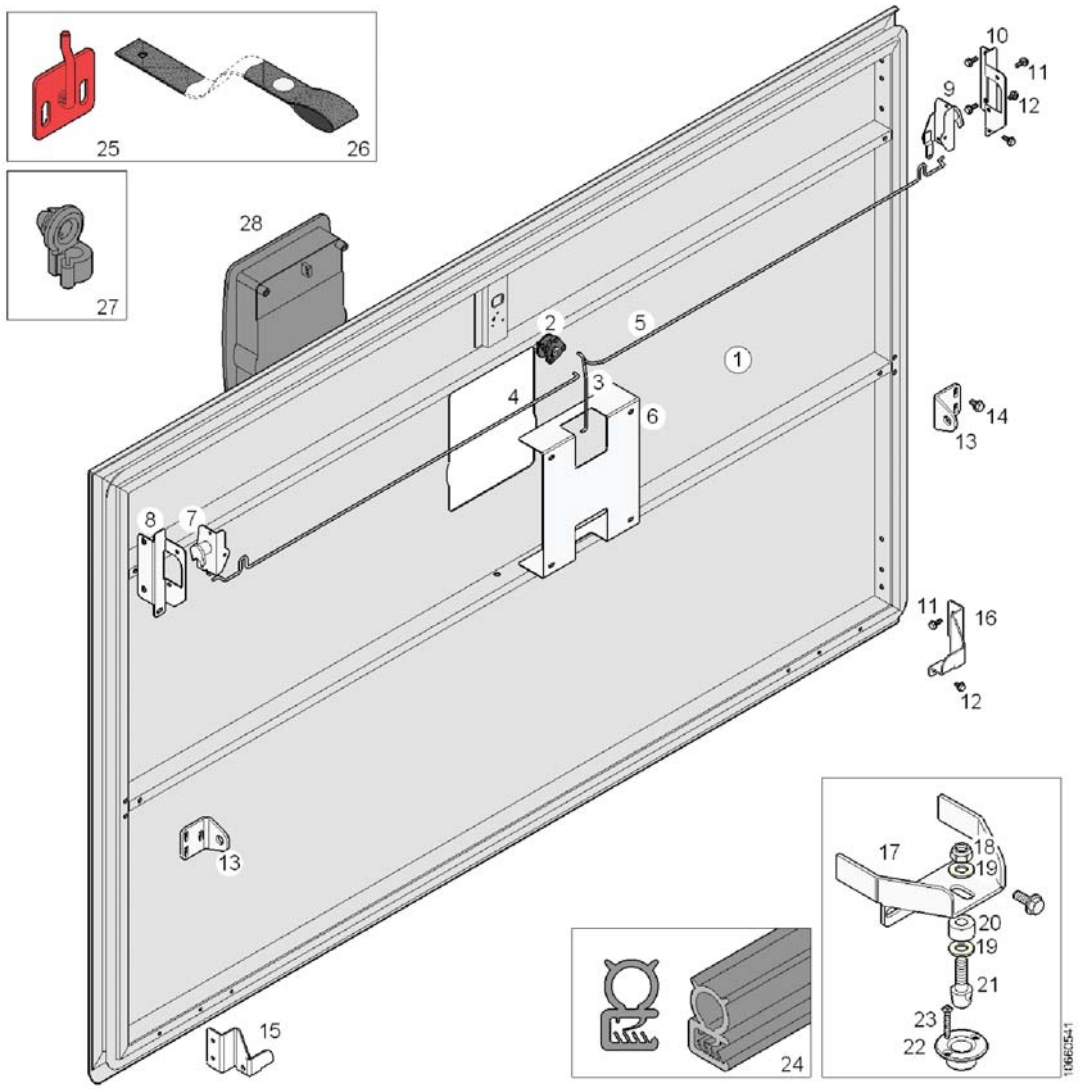

Pos.	Q.	Part n°	Description	Specification
19	4	660625805	Washer	DIN 125 A8,4x17x1,6
20	2	660634717	Spacer	MAT:P 8,5x18x10
21	2	10565541	Pin	l.=40mm
22	2	10704172	Bush	
23	4	660274125	Screw	DIN 7983 3,5x25mm
24	#m	10667622	Rubber section	
25	1	10852182	Bracket	(RAL 3000)
26	1	10622156	Strap	l.=350mm
27	#	10652072	Keeper	
28	#	»1066.01-7...	Lock	

Side access door + accessories

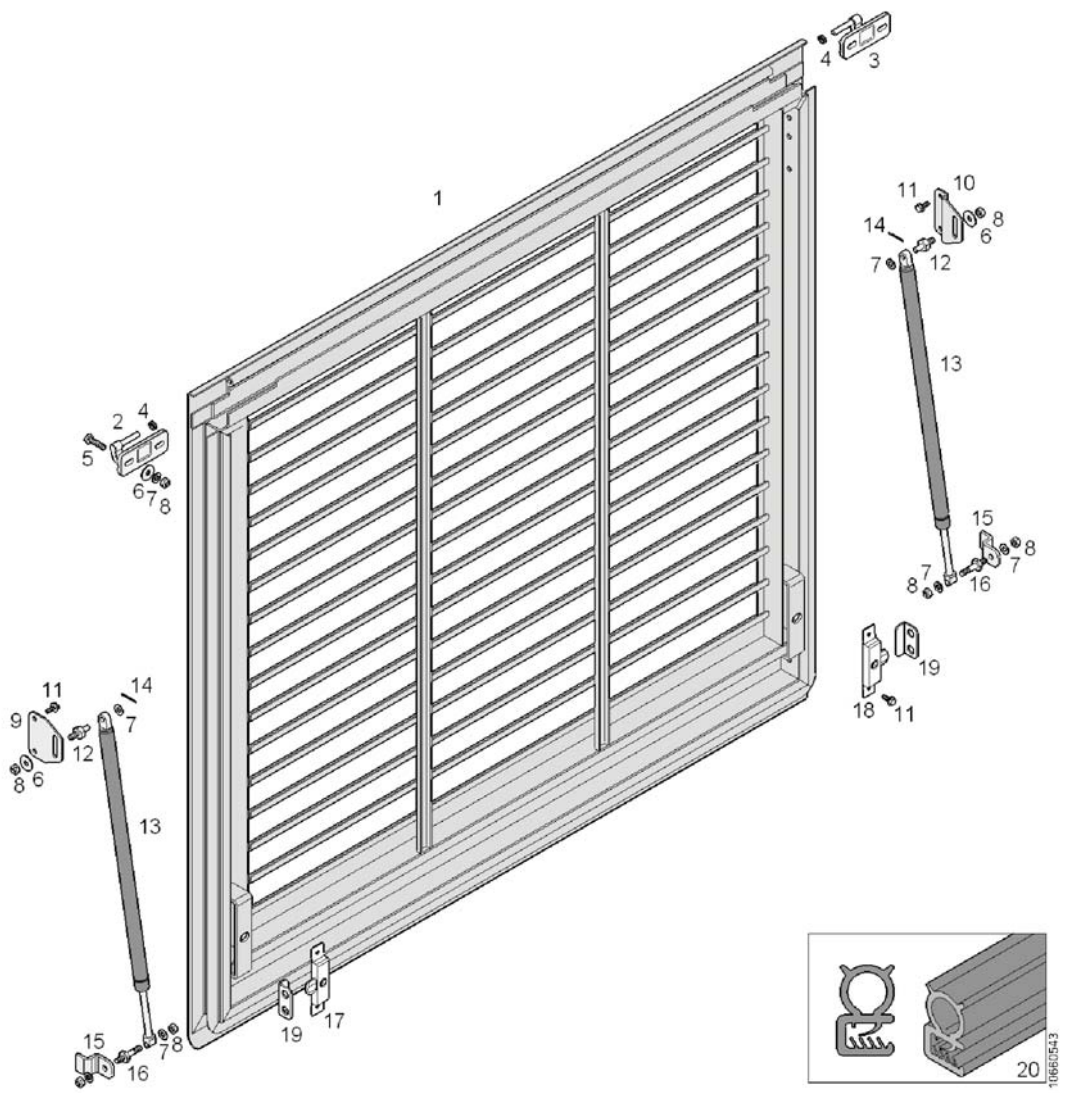

Pos.	Q.	Part n°	Description	Specification
1	1	11386929	Access door; without accessories	
2	1	10668881	Hinge	Re
3	1	10668879	Hinge	Li
4	2	10644411	Washer	MAT:P 13.5x8.1x3
5	4	660229806	Screw	DIN 933 M8x30 MAT:IN
6	6	660625907	Washer	DIN 9021 A8,4 MAT:IN
7	10	660625806	Washer	DIN 125 A8,4 MAT:IN
8	10	660207107	Lock nut	DIN 980 M8x1,25 k.=8
9	1	10705113	Bracket	
10	1	10706123	Bracket	
11	10	660259008	Screw	M6x16
12	2	643405080	Pivot pin	M8 l.=40mm
13	2	»1066.01-8...	Access doors, gasstruts	
14	2	660615901	Split pin	DIN 94 2x25
15	2	10639032	Mounting bracket	
16	2	660200804	Pin	M8
17	1	660171806	Lock	25x125 Li MAT:IN
18	1	660171807	Lock	25x125 Re MAT:IN

Side access door + accessories

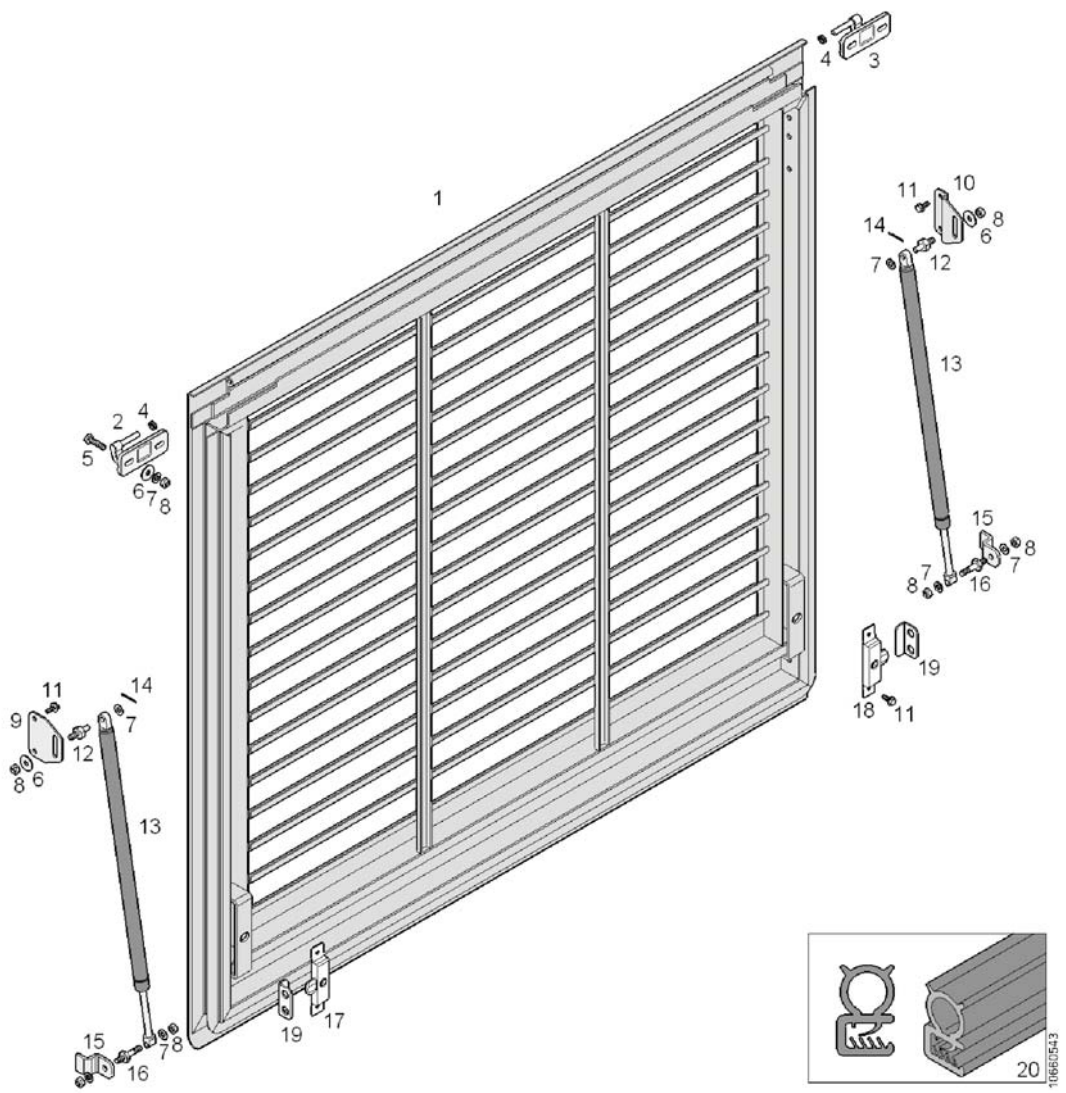

Pos.	Q.	Part n°	Description	Specification
19	2	90602538	Stop	
20	#m	10667622	Rubber section	

Side access door + accessories

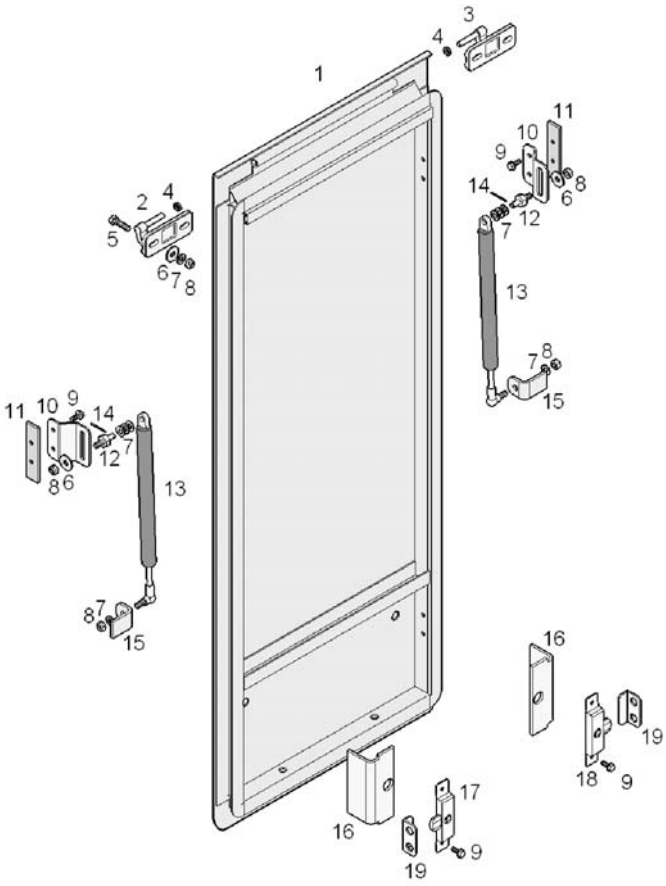

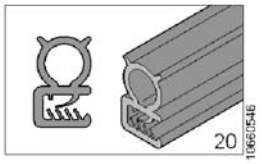

Pos.	Q.	Part n°	Description	Specification
1	1	11386930	Access door; without accessories	
2	1	10668881	Hinge	Re
3	1	10668879	Hinge	Li
4	2	10644411	Washer	MAT:P 13.5x8.1x3
5	4	660229806	Screw	DIN 933 M8x30 MAT:IN
6	6	660625907	Washer	DIN 9021 A8,4 MAT:IN
7	12	660625806	Washer	DIN 125 A8,4 MAT:IN
8	8	660207107	Lock nut	DIN 980 M8x1,25 k.=8
9	8	660259008	Screw	M6x16
10	2	10771634	Bracket	
11	2	90602889	Fastener	
12	2	643405080	Pivot pin	M8 l.=40mm
13	2	»1066.01-8...	Access doors, gasstruts	
14	2	660615901	Split pin	DIN 94 2x25
15	2	10706166	Bracket	
16	2	90602107	Plate	
17	1	660171806	Lock	25x125 Li MAT:IN
18	1	660171807	Lock	25x125 Re MAT:IN

Side access door + accessories

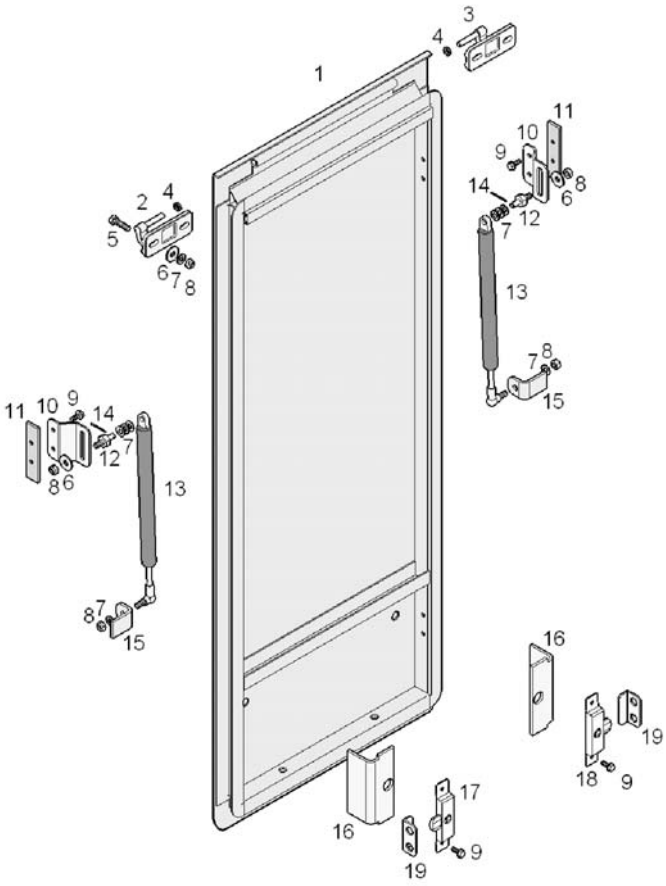

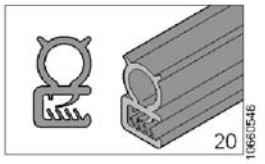

Pos.	Q.	Part n°	Description	Specification
19	2	90602538	Stop	
20	#m	10667622	Rubber section	

Side access door + accessories

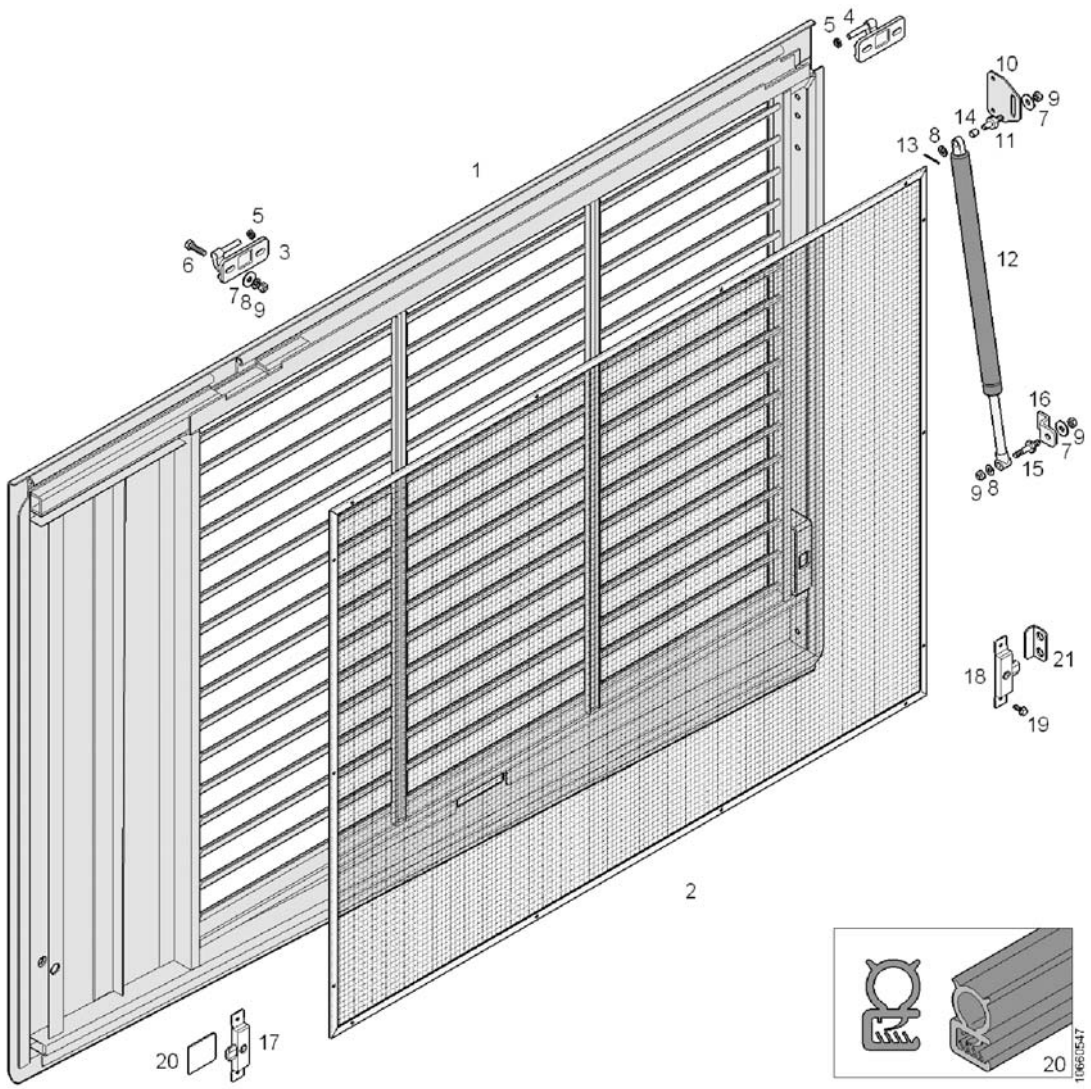

Pos.	Q.	Part n°	Description	Specification
1	1	11386931	Access door; without accessories	
2	1	90611332	Gauze	
3	1	10668881	Hinge	Re
4	1	10668879	Hinge	Li
5	2	10644411	Washer	MAT:P 13.5x8.1x3
6	4	660229806	Screw	DIN 933 M8x30 MAT:IN
7	6	660625907	Washer	DIN 9021 A8,4 MAT:IN
8	6	660625806	Washer	DIN 125 A8,4 MAT:IN
9	7	660207107	Lock nut	DIN 980 M8x1,25 k.=8
10	1	10705113	Bracket	
11	1	643405080	Pivot pin	M8 l.=40mm
12	1	»1066.01-8...	Access doors, gasstruts	
13	1	660615901	Split pin	DIN 94 2x25
14	1	10828504	Bushing	MAT:IN Ø10xØ8 l.=10mm
15	1	660200804	Pin	M8
16	1	10639032	Mounting bracket	
17	1	660171806	Lock	25x125 Li MAT:IN
18	1	660171807	Lock	25x125 Re MAT:IN

Side access door + accessories

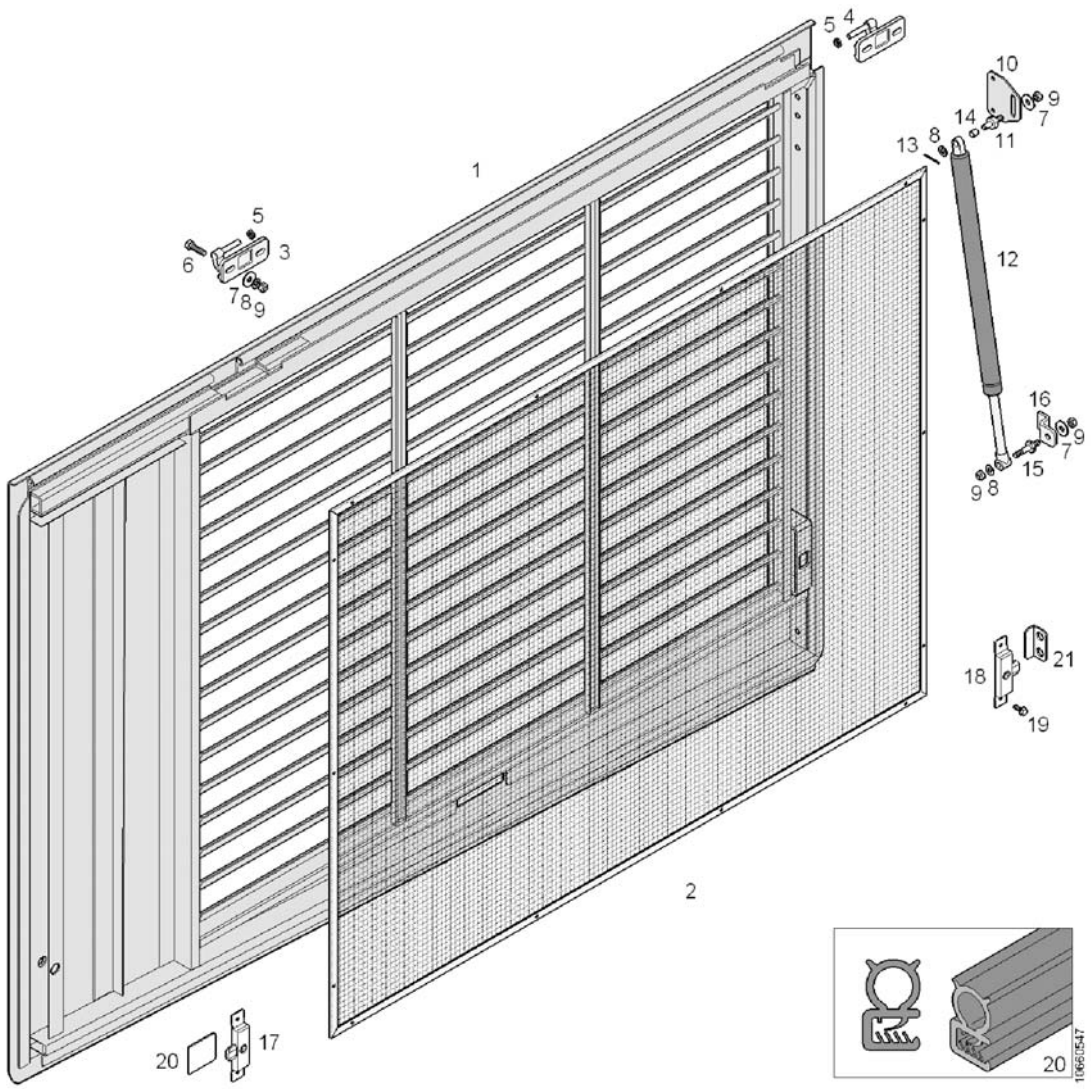

Pos.	Q.	Part n°	Description	Specification
19	4	660259008	Screw	M6x16
20	1	90607620	Stop	
21	1	90602538	Stop	
22	#m	10667622	Rubber section	

Side access door + accessories

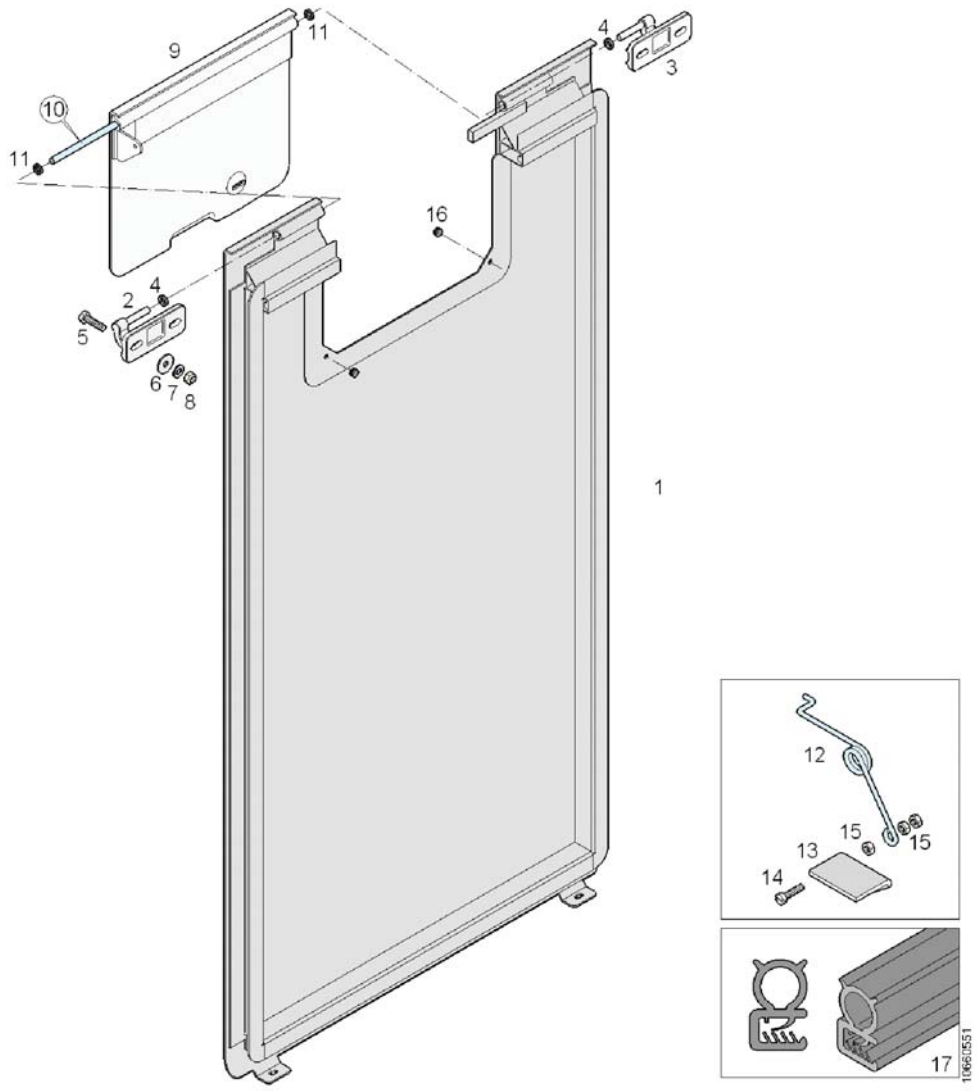

Pos.	Q.	Part n°	Description	Specification
1	1	11386936	Access door; without accessories	
2	1	10668881	Hinge	Re
3	1	10668879	Hinge	Li
4	2	10644411	Washer	MAT:P 13.5x8.1x3
5	4	660229806	Screw	DIN 933 M8x30 MAT:IN
6	4	660625907	Washer	DIN 9021 A8,4 MAT:IN
7	4	660625806	Washer	DIN 125 A8,4 MAT:IN
8	4	660207107	Lock nut	DIN 980 M8x1,25 k.=8
9	1	10593581	Access door; without accessories	
10	1	10932135	Hinge pin	Ø8 l.=365mm MAT: IN
11	2	10644410	Washer	MAT:P 13.5x8.1x2.5
12	1	629100650	Spring	
13	1	90600368	Bracket	
14	1	660284956	Screw	DIN 84 M4x16 MAT:IN
15	3	10667068	Nut	DIN 555 M4x0,7 MAT:IN
16	2	660157601	Stop	MAT:R
17	#m	10667622	Rubber section	

Side access door + accessories

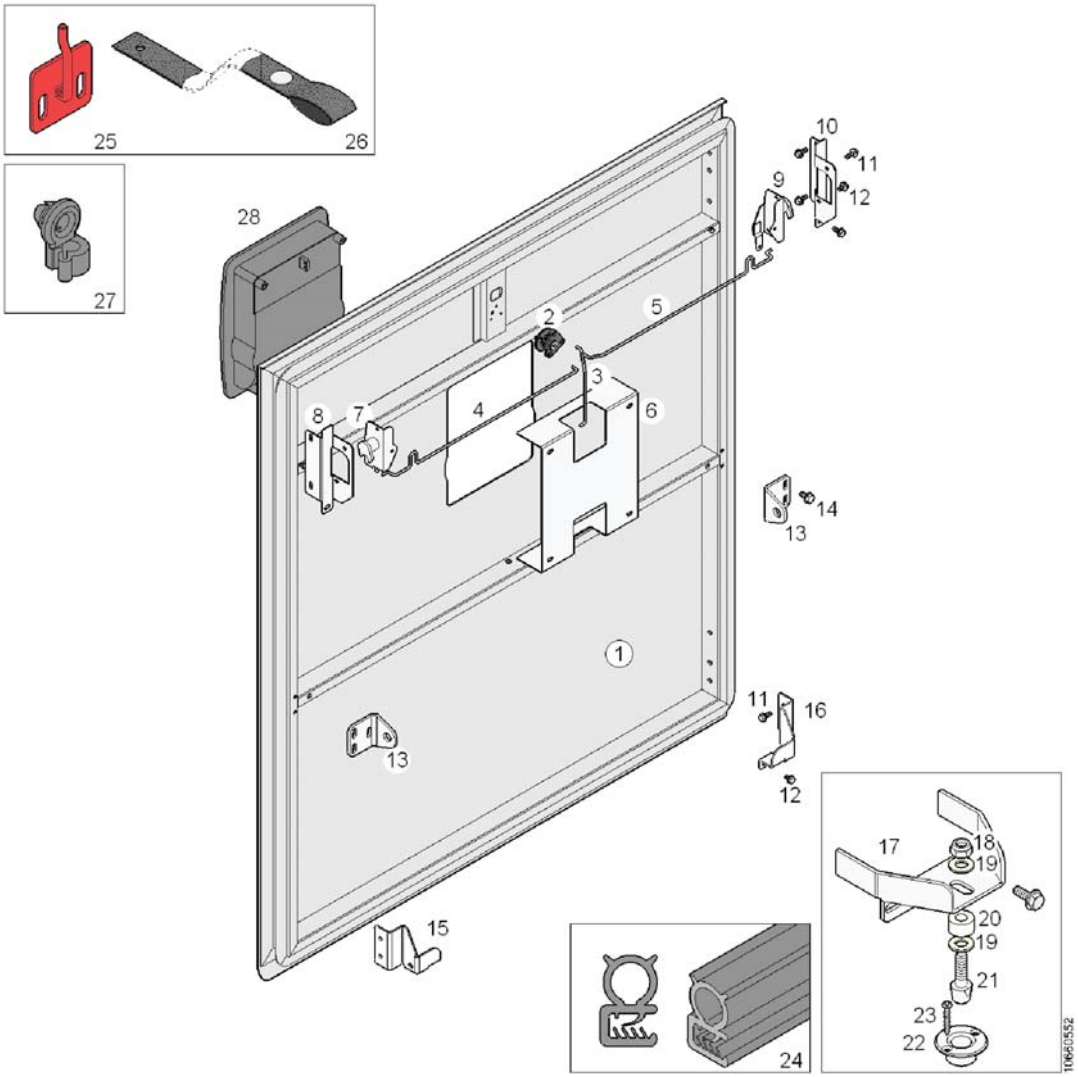

Pos.	Q.	Part n°	Description	Specification
1	1	11386935	Access door; without accessories	
2	1	»1066.01-7501	Rocker arm	
3	1	90612114	Rod	Ø4mm
4	1	90611167	Rod	
5	1	90611168	Rod	
6	1	10704825	Bracket	
7	1	660170421	Latch	
8	1	10704822	Bracket	
9	1	660170420	Latch	
10	1	10704821	Bracket	
11	16	660259008	Screw	M6x16
12	6	660259006	Screw	M6x10
13	2	90603998	Bracket	
14	6	10519579	Screw	M8x16 k.=8.8
15	1	10701167	Bracket	
16	1	10701166	Bracket	
17	2	10735820	Bracket	
18	2	660207100	Lock nut	DIN 985 M8x1,25 k.=8

Side access door + accessories

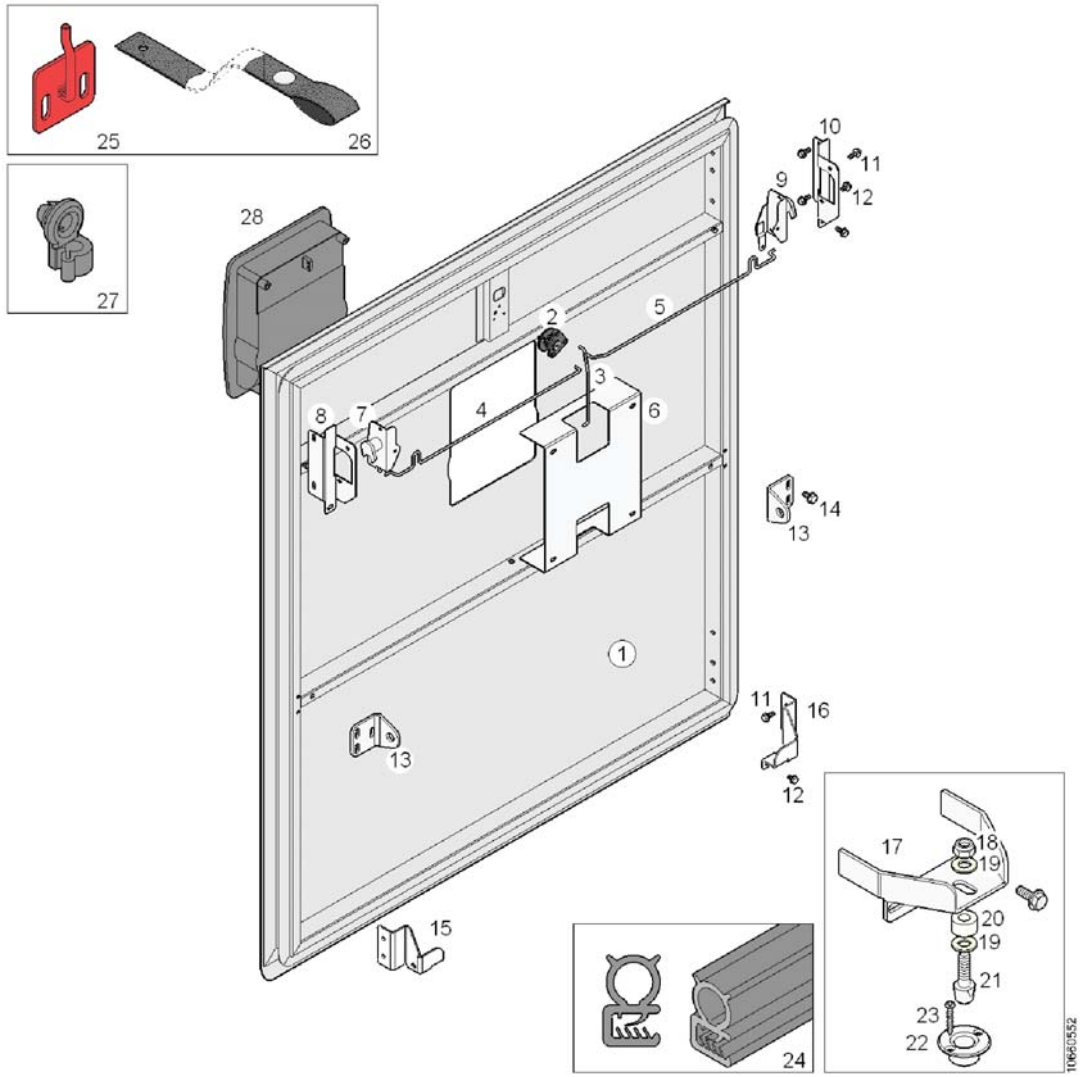

Pos.	Q.	Part n°	Description	Specification
19	4	660625805	Washer	DIN 125 A8,4x17x1,6
20	2	660634717	Spacer	MAT:P 8,5x18x10
21	2	10565541	Pin	l.=40mm
22	2	10704172	Bush	
23	4	660274125	Screw	DIN 7983 3,5x25mm
24	#m	10667622	Rubber section	
25	1	10852182	Bracket	(RAL 3000)
26	1	10622156	Strap	l.=350mm
27	#	10652072	Keeper	
28	#	»1066.01-7...	Lock	

Side access door + accessories

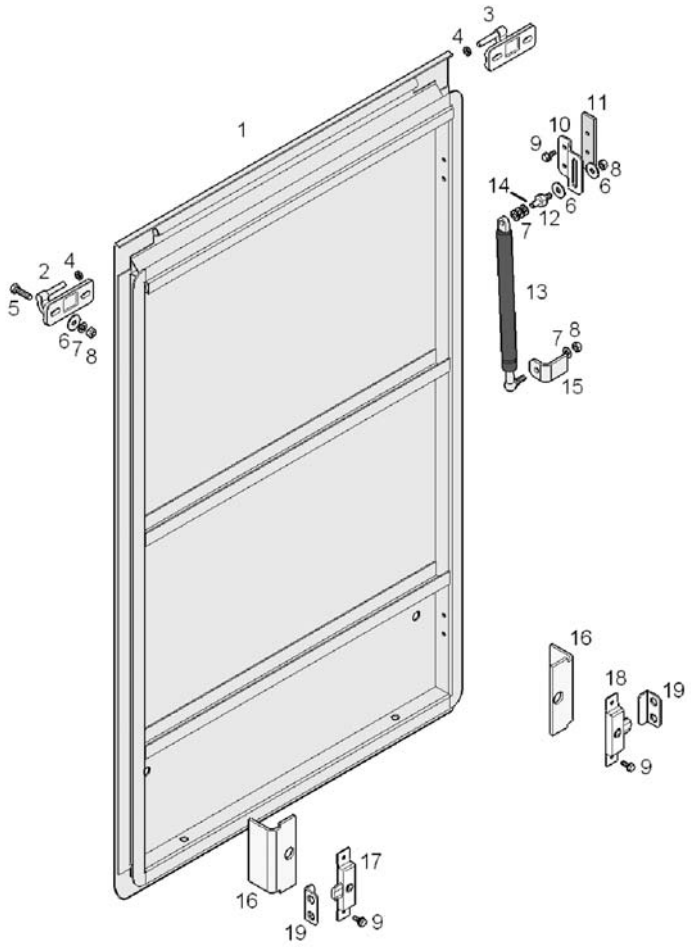

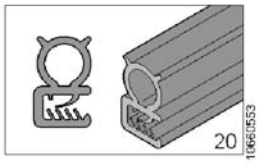

Pos.	Q.	Part n°	Description	Specification
1	1	11386934	Access door; without accessories	
2	1	10668881	Hinge	Re
3	1	10668879	Hinge	Li
4	2	10644411	Washer	MAT:P 13.5x8.1x3
5	4	660229806	Screw	DIN 933 M8x30 MAT:IN
6	6	660625907	Washer	DIN 9021 A8,4 MAT:IN
7	11	660625806	Washer	DIN 125 A8,4 MAT:IN
8	6	660207107	Lock nut	DIN 980 M8x1,25 k.=8
9	6	660259008	Screw	M6x16
10	1	10771634	Bracket	
11	1	90602889	Fastener	
12	1	643405080	Pivot pin	M8 l.=40mm
13	1	»1066.01-8...	Access doors, gasstruts	
14	1	660615901	Split pin	DIN 94 2x25
15	1	10706166	Bracket	
16	2	90602107	Plate	
17	1	660171806	Lock	25x125 Li MAT:IN
18	1	660171807	Lock	25x125 Re MAT:IN

Side access door + accessories

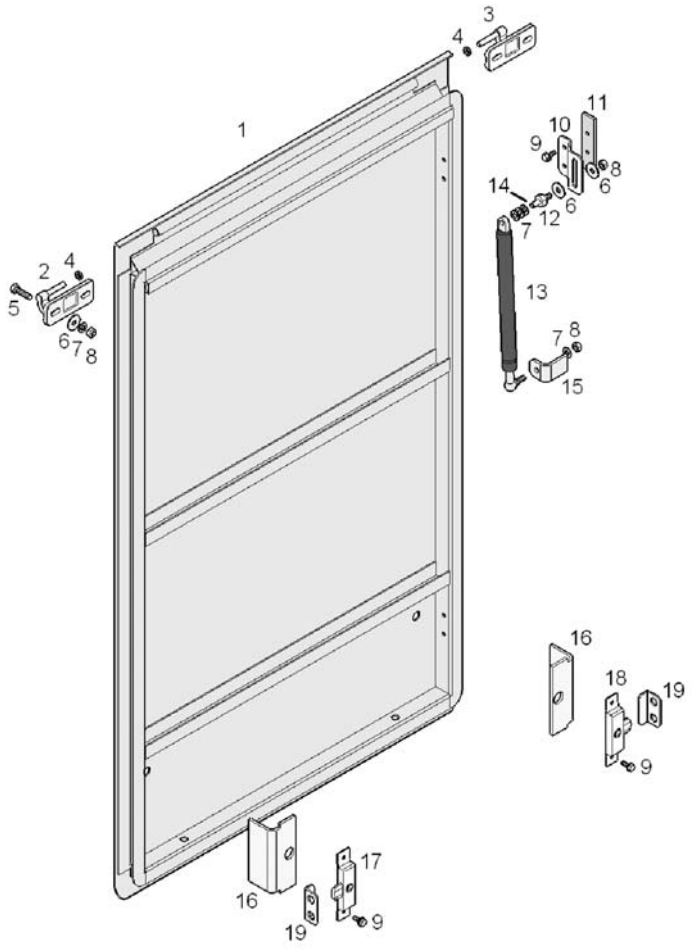

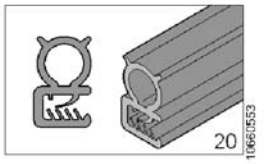

Pos.	Q.	Part n°	Description	Specification
19	2	90602538	Stop	
20	#m	10667622	Rubber section	

Side access door + accessories

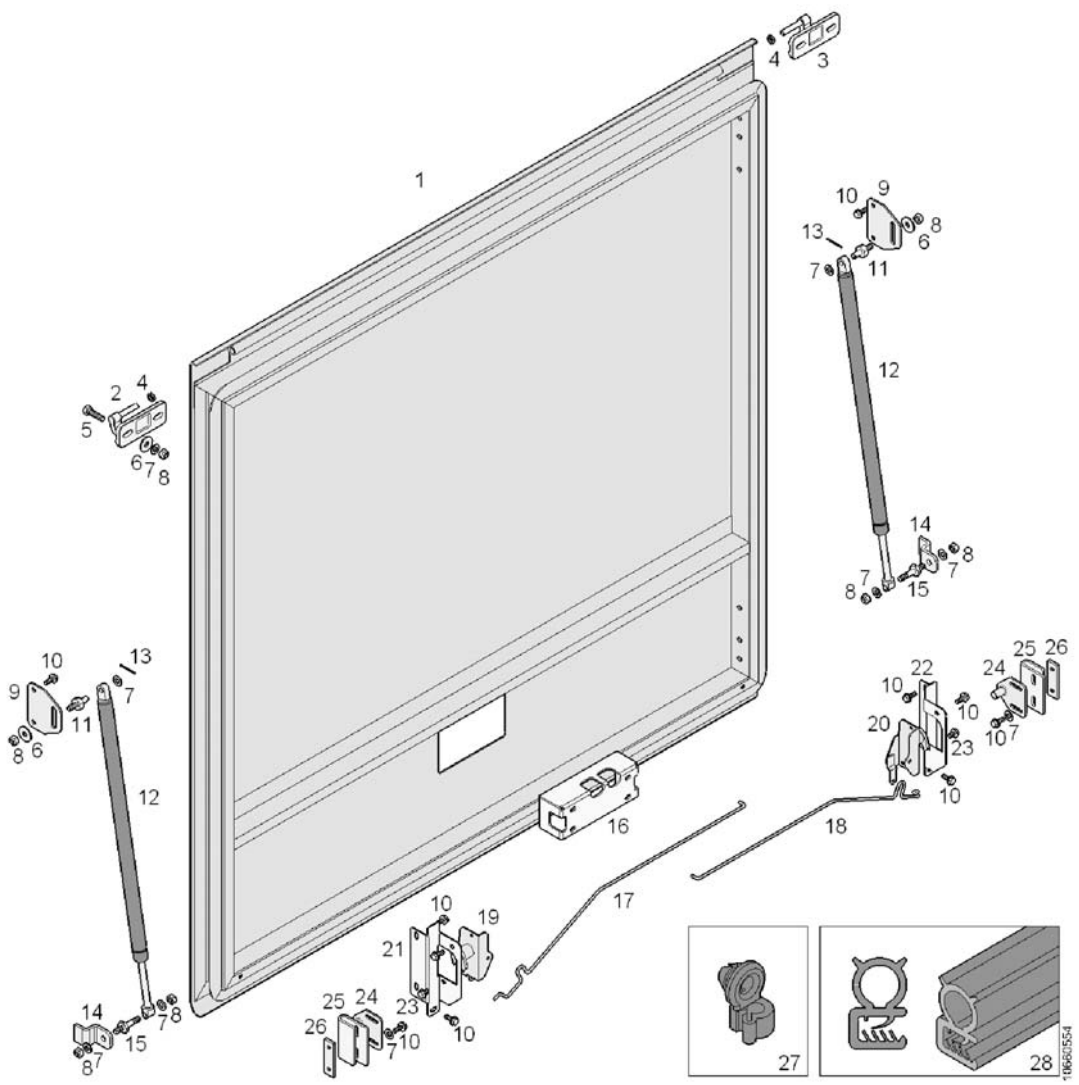

Pos.	Q.	Part n°	Description	Specification
1	1	11386933	Access door; without accessories	
2	1	10668881	Hinge	Re
3	1	10668879	Hinge	Li
4	2	10644411	Washer	MAT:P 13.5x8.1x3
5	4	660229806	Screw	DIN 933 M8x30 MAT:IN
6	6	660625907	Washer	DIN 9021 A8,4 MAT:IN
7	14	660625806	Washer	DIN 125 A8,4 MAT:IN
8	10	660207107	Lock nut	DIN 980 M8x1,25 k.=8
9	2	10705113	Bracket	
10	16	660259008	Screw	M6x16
11	2	643405080	Pivot pin	M8 l.=40mm
12	2	»1066.01-8...	Access doors, gasstruts	
13	2	660615901	Split pin	DIN 94 2x25
14	2	10639032	Mounting bracket	
15	2	660200804	Pin	M8
16	1	90600726	Bracket	
17	1	90610899	Rod	Ø4mm
18	1	90610900	Rod	

Side access door + accessories

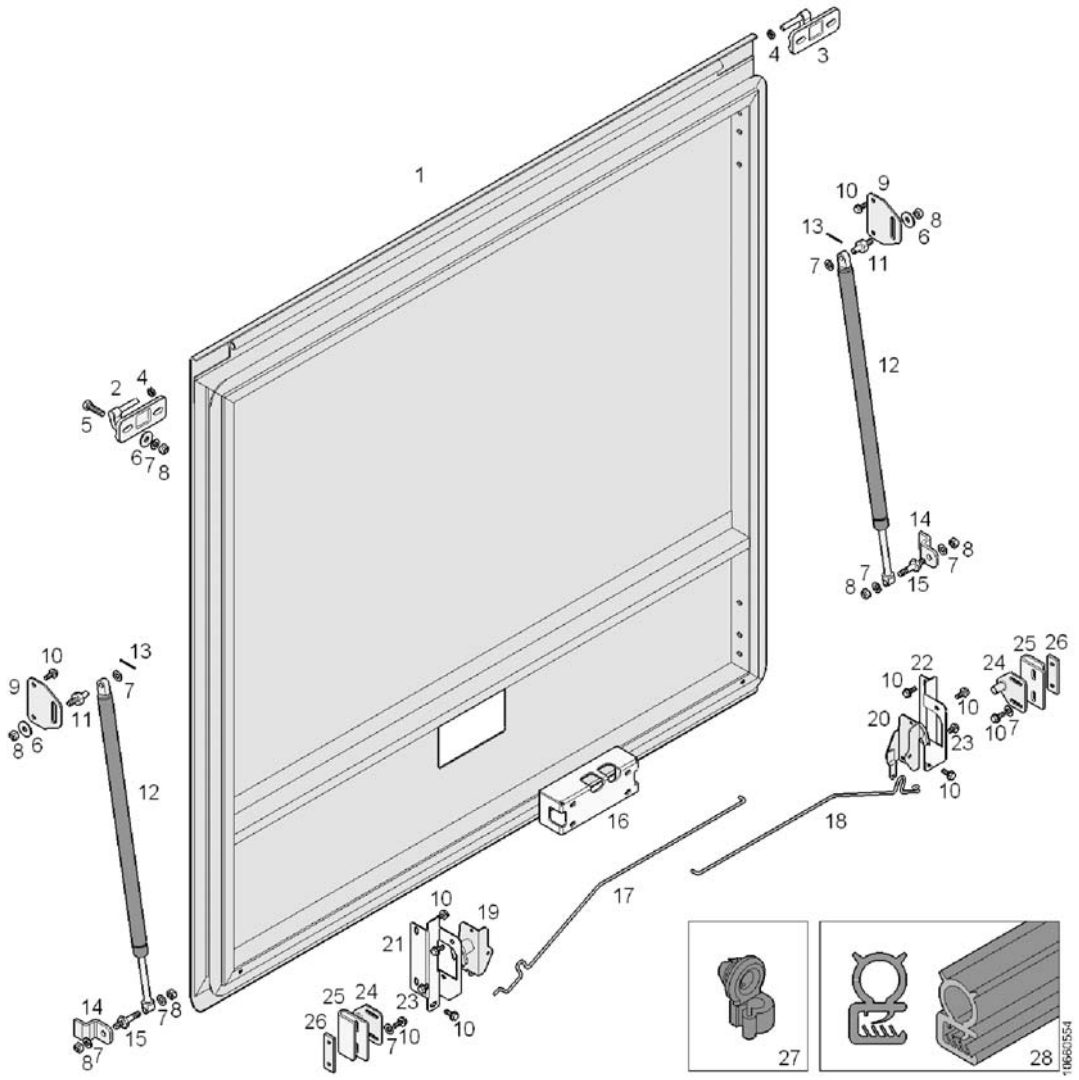

Pos.	Q.	Part n°	Description	Specification
19	1	660170421	Latch	
20	1	660170420	Latch	
21	1	10704822	Bracket	
22	1	10704821	Bracket	
23	4	660259006	Screw	M6x10
24	2	10958849	Cam	MAT:IN
25	2	10704168	Bracket	
26	2	10639034	Fastener	62x20x5
27	#	10652072	Keeper	
28	#m	10667622	Rubber section	

Side access door + accessories

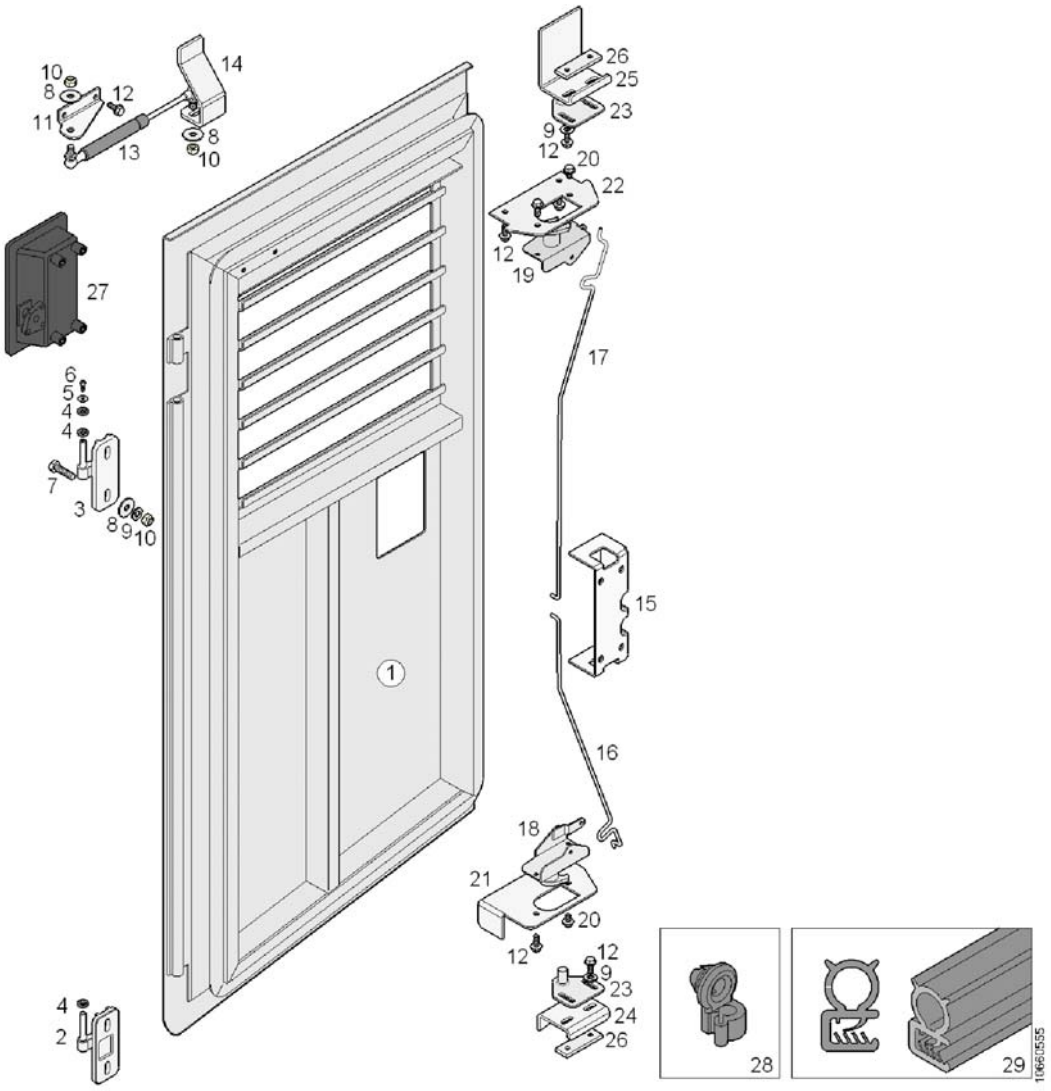

Pos.	Q.	Part n°	Description	Specification
1	1	11386932	Access door; without accessories	
2	1	10668881	Hinge	Re
3	1	10749138	Hinge	
4	3	10644411	Washer	MAT:P 13.5x8.1x3
5	1	660621205	Washer	DIN 9021 M4 MAT: IN
6	1	660284910	Screw	DIN 84 M4x10
7	4	660229806	Screw	DIN 933 M8x30 MAT:IN
8	6	660625907	Washer	DIN 9021 A8,4 MAT:IN
9	8	660625806	Washer	DIN 125 A8,4 MAT:IN
10	6	660207107	Lock nut	DIN 980 M8x1,25 k.=8
11	1	10749139	Bracket	
12	10	660259008	Screw	M6x16
13	1	»1066.01-8...	Access doors, gasstruts	
14	1	10749140	Bracket	
15	1	90600726	Bracket	
16	1	90611215	Rod	Ø4mm
17	1	90610897	Rod	Ø4mm
18	1	660170421	Latch	

Side access door + accessories

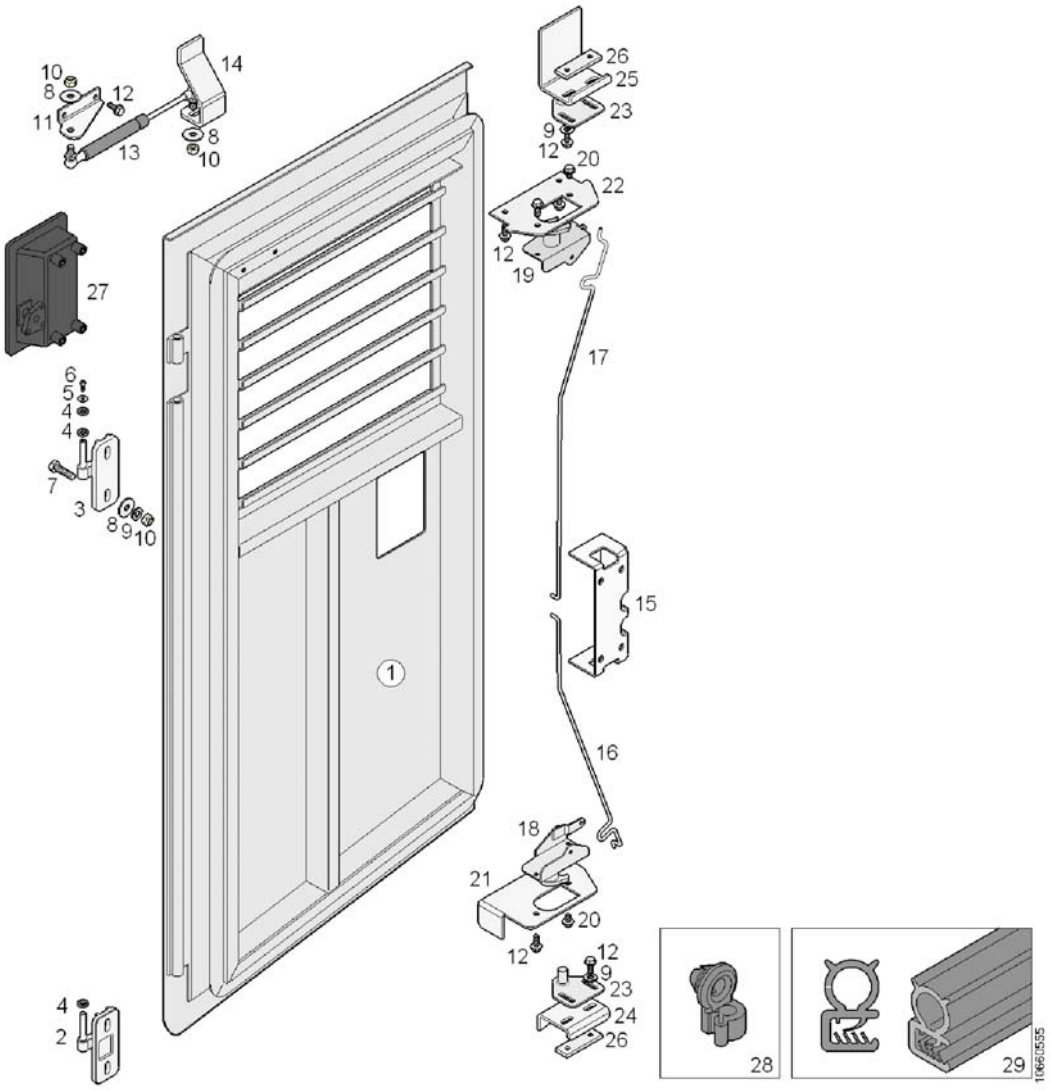

Pos.	Q.	Part n°	Description	Specification
19	1	660170420	Latch	
20	2	660259006	Screw	M6x10
21	1	10749148	Mounting bracket	
22	1	10581969	Mounting bracket	
23	2	10958849	Cam	MAT:IN
24	1	90610995	Bracket	
25	1	10749142	Bracket	
26	2	10639034	Fastener	62x20x5
27	1	10722099	Lock	
28	#	10652072	Keeper	
29	#m	10667622	Rubber section	

Side access door + accessories

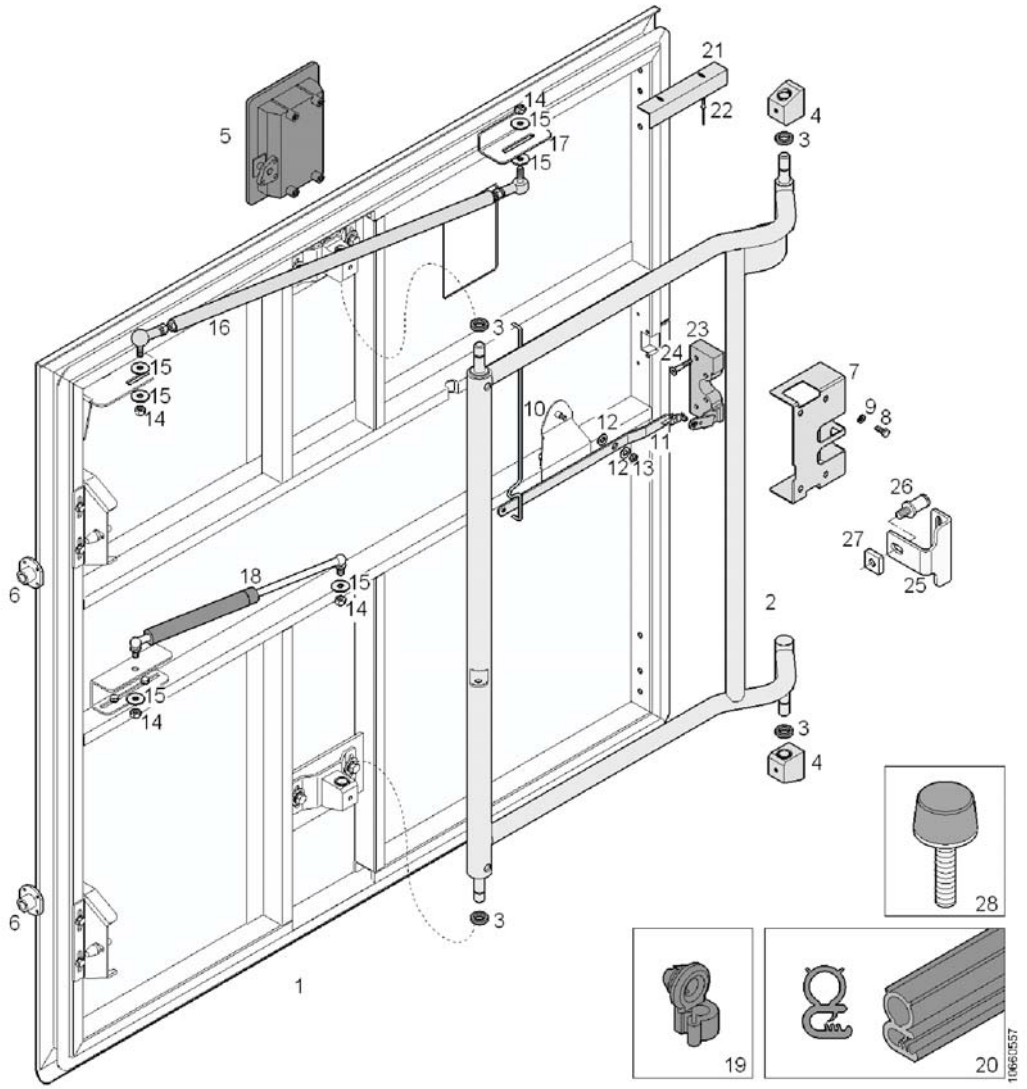

Pos.	Q.	Part n°	Description	Specification
1	1	90611421	Access door; without accessories	
2	1	10775524	Frame	
3	4	10775523	Ring	Ø24xØ15,2x5 MAT:P (Z)
4	2	653400030	Mounting bracket	
5	1	10743003	Lock	P178
6	2	90603320	Bush	
7	1	10775525	Mounting bracket	
8	4	660220206	Screw	DIN 933 M6x1x16 k.=8.8
9	4	660636302	Coil spring lock washer	DIN 127 A6 MAT:IN
10	1	10775529	Rod	
11	1	10775530	Lever	
12	2	660625805	Washer	DIN 125 A8,4x17x1,6
13	1	660207402	Lock nut	DIN 980 M6
14	4	660207107	Lock nut	DIN 980 M8x1,25 k.=8
15	6	660625907	Washer	DIN 9021 A8,4 MAT:IN
16	1	90603321	Rod	
17	1	90607981	Bracket	
18	1	»1066.01-8...	Access doors, gasstruts	

Side access door + accessories

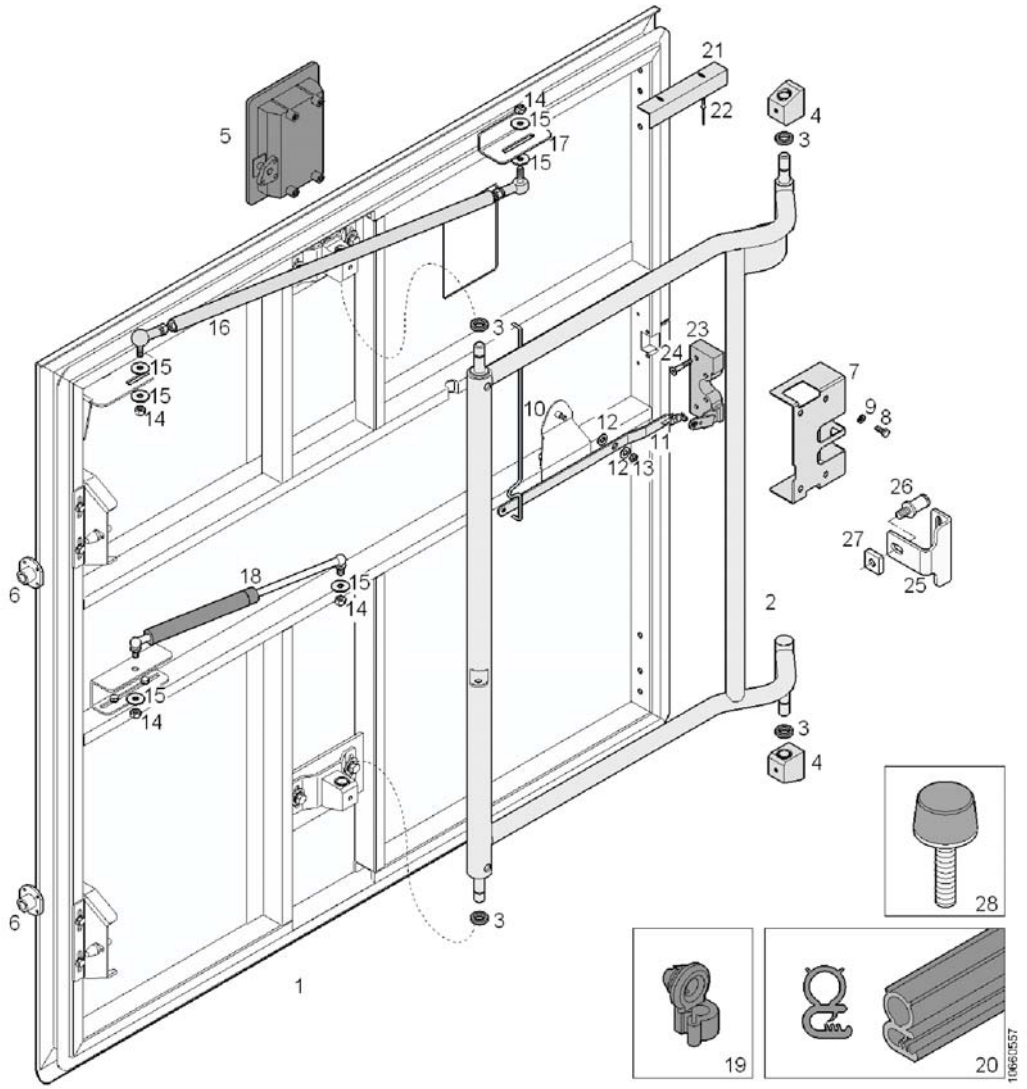

Pos.	Q.	Part n°	Description	Specification
19	#	10652072	Keeper	
20	#m	10780270	Rubber section	
21	1	90605609	Profile	l.=150mm
22	2	660611600	Blind-rivet	MAT:AL Ø4x14
23	1	10706435	Lock	
24	4	660299579	Screw	DIN 7991 M6x35 MAT:IN
25	1	10775528	Bracket	
26	1	10727028	Latch	
27	1	10775527	Fastener	
28	1	10670293	Stop	M8

Side access door + accessories

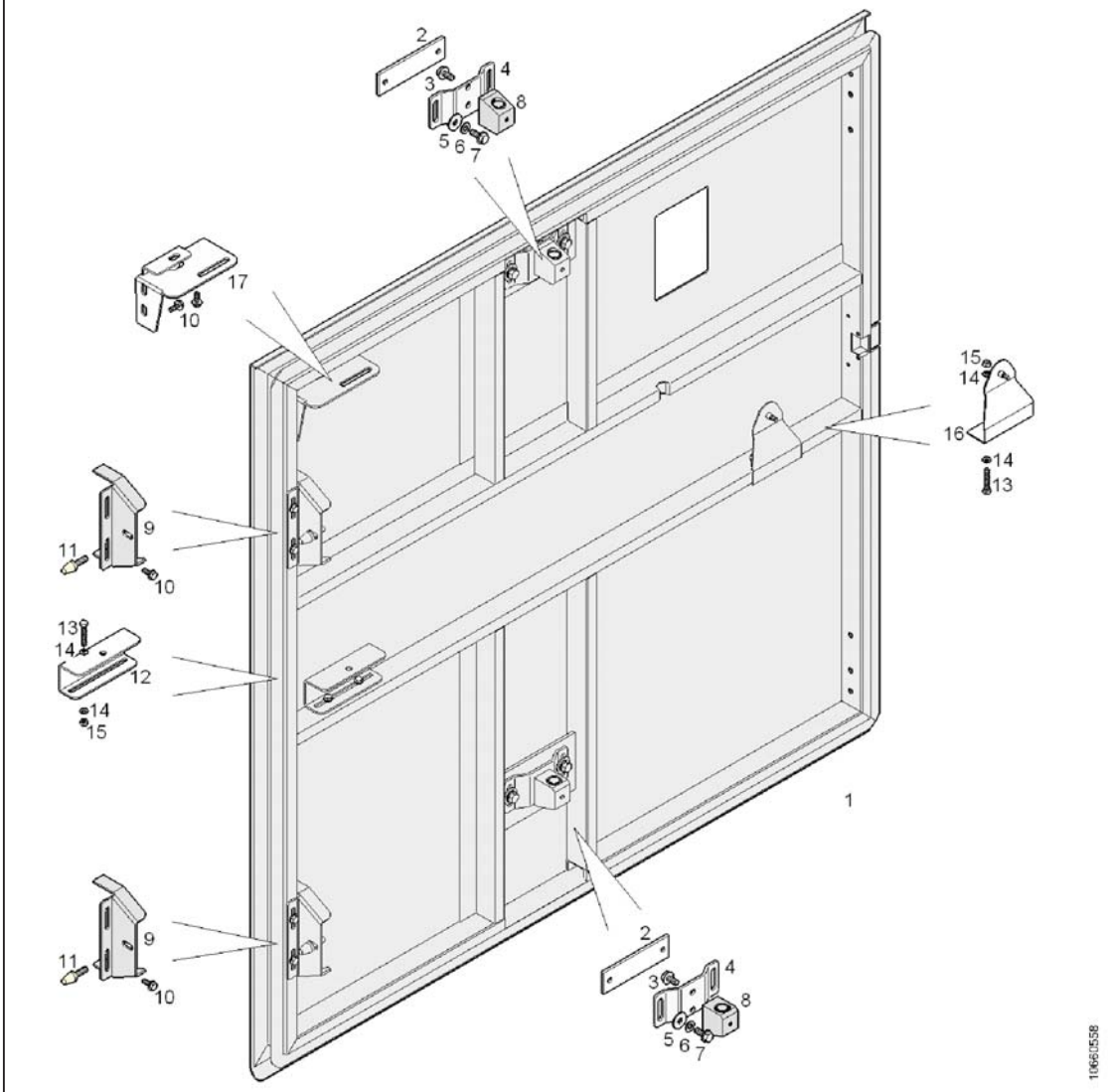

Pos.	Q.	Part n°	Description	Specification
1	1	90611421	Access door; without accessories	
		-		
2	*2	10775514	Plate	
3	*4	10519579	Screw	M8x16 k.=8.8
4	*2	10775516	Bracket	
5	*4	660625907	Washer	DIN 9021 A8,4 MAT:IN
6	*4	660625806	Washer	DIN 125 A8,4 MAT:IN
7	*4	660259012	Screw	DIN 933 M8x1,25x20
8	*2	653400030	Mounting bracket	
9	*2	90610898	Bracket	
10	*7	660259008	Screw	M6x16
11	*2	11020483	Pin	
12	*1	90607982	Bracket	
13	*4	660220603	Screw	DIN 933 M6x1x35 k.=8.8
14	*8	10976964	Washer	M6
15	*4	660207414	Lock nut	DIN 980 M6x1,00 k.=8
16	*1	10775519	Fastener	
17	*1	90611428	Bracket	

Side access door + accessories

Pos.	Q.	Part n°	Description	Specification
1	1	11386937	Access door; without accessories	
2	1	10668881	Hinge	Re
3	1	10668879	Hinge	Li
4	2	10644411	Washer	MAT:P 13.5x8.1x3
5	4	10609177	Bushing	MAT:IN Ø10xØ8 l.=20mm
6	4	660229806	Screw	DIN 933 M8x30 MAT:IN
7	4	660625907	Washer	DIN 9021 A8,4 MAT:IN
8	4	660625806	Washer	DIN 125 A8,4 MAT:IN
9	4	660207107	Lock nut	DIN 980 M8x1,25 k.=8
10	#m	10667622	Rubber section	

Side access door + accessories

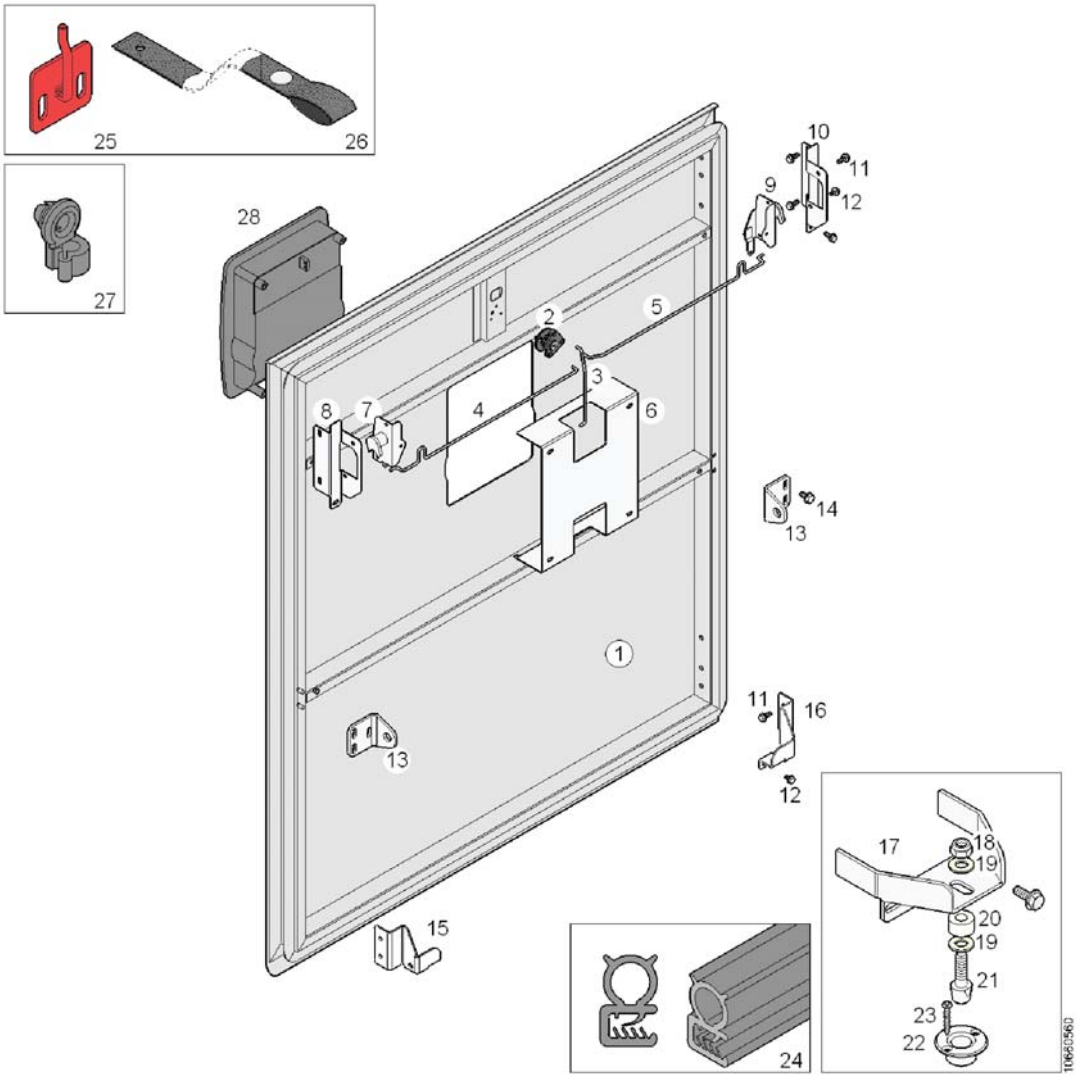

Pos.	Q.	Part n°	Description	Specification
1	1	11386938	Access door; without accessories	
2	1	»1066.01-7501	Rocker arm	
3	1	90612114	Rod	Ø4mm
4	1	90612044	Rod	Ø4mm
5	1	90612045	Rod	Ø4mm
6	1	10704825	Bracket	
7	1	660170421	Latch	
8	1	10704822	Bracket	
9	1	660170420	Latch	
10	1	10704821	Bracket	
11	16	660259008	Screw	M6x16
12	6	660259006	Screw	M6x10
13	2	90603998	Bracket	
14	6	10519579	Screw	M8x16 k.=8.8
15	1	10701167	Bracket	
16	1	10701166	Bracket	
17	2	10735820	Bracket	
18	2	660207100	Lock nut	DIN 985 M8x1,25 k.=8

Side access door + accessories

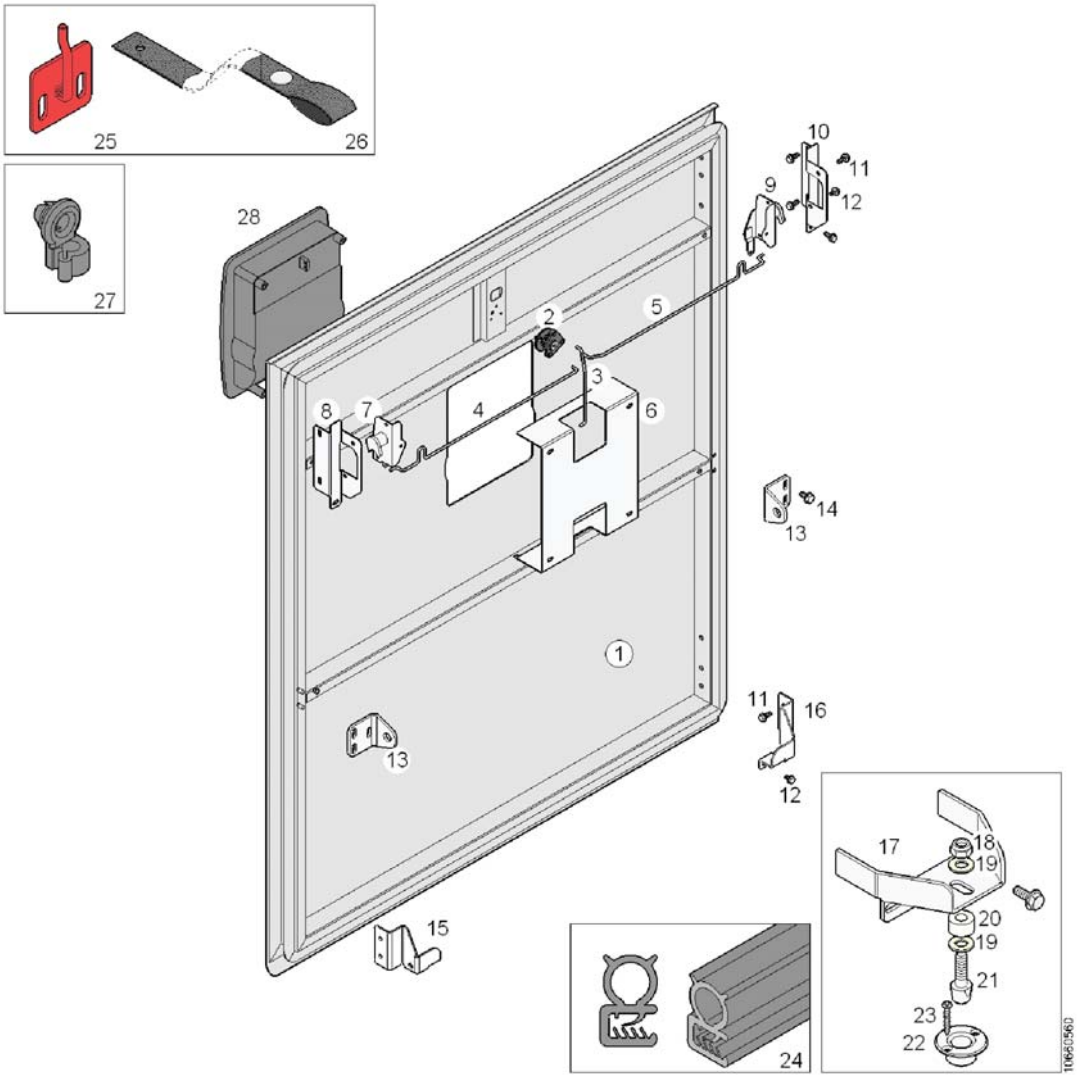

Pos.	Q.	Part n°	Description	Specification
19	4	660625805	Washer	DIN 125 A8,4x17x1,6
20	2	660634717	Spacer	MAT:P 8,5x18x10
21	2	10565541	Pin	l.=40mm
22	2	10704172	Bush	
23	4	660274125	Screw	DIN 7983 3,5x25mm
24	#m	10667622	Rubber section	
25	1	10852182	Bracket	(RAL 3000)
26	1	10622156	Strap	l.=350mm
27	#	10652072	Keeper	
28	#	»1066.01-7...	Lock	

Side access door + accessories

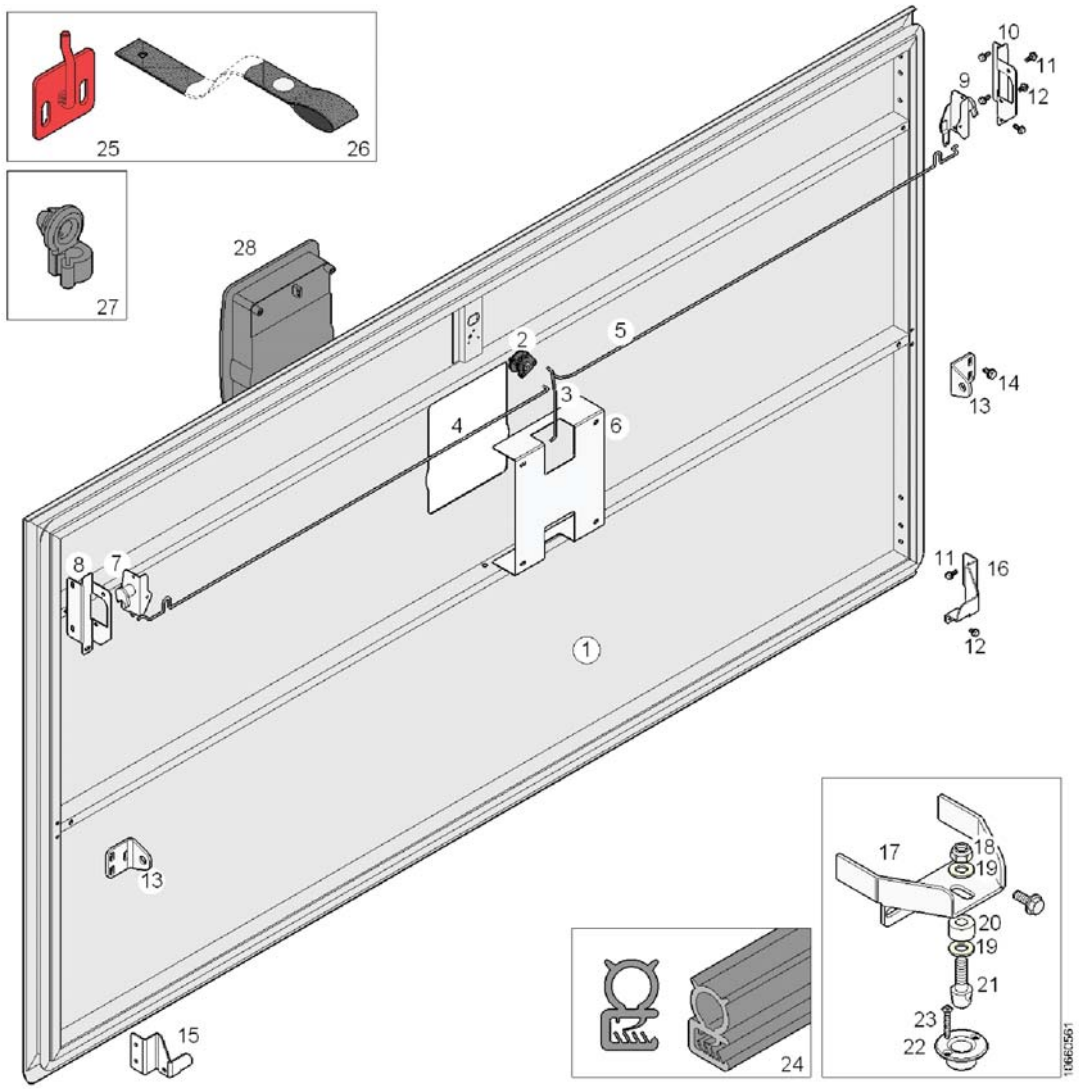

Pos.	Q.	Part n°	Description	Specification
1	1	11398936	Access door; without accessories	
2	1	»1066.01-7501	Rocker arm	
3	1	90612114	Rod	Ø4mm
4	1	90612083	Rod	Ø4mm
5	1	90612084	Rod	Ø4mm
6	1	10704825	Bracket	
7	1	660170421	Latch	
8	1	10704822	Bracket	
9	1	660170420	Latch	
10	1	10704821	Bracket	
11	16	660259008	Screw	M6x16
12	6	660259006	Screw	M6x10
13	2	90603998	Bracket	
14	6	10519579	Screw	M8x16 k.=8.8
15	1	10701167	Bracket	
16	1	10701166	Bracket	
17	2	10735820	Bracket	
18	2	660207100	Lock nut	DIN 985 M8x1,25 k.=8

Side access door + accessories

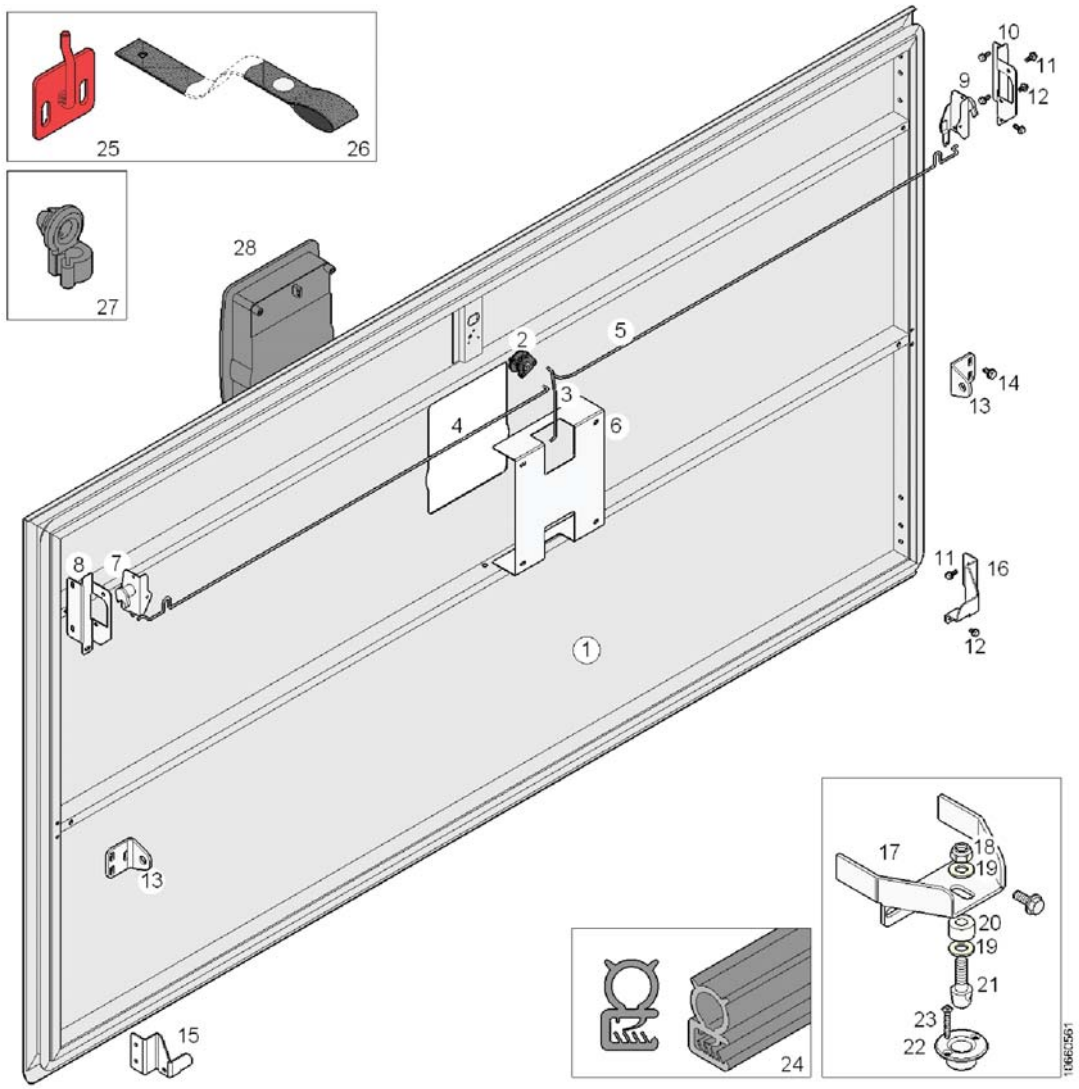

Pos.	Q.	Part n°	Description	Specification
19	4	660625805	Washer	DIN 125 A8,4x17x1,6
20	2	660634717	Spacer	MAT:P 8,5x18x10
21	2	10565541	Pin	l.=40mm
22	2	10704172	Bush	
23	4	660274125	Screw	DIN 7983 3,5x25mm
24	#m	10667622	Rubber section	
25	1	10852182	Bracket	(RAL 3000)
26	1	10622156	Strap	l.=350mm
27	#	10652072	Keeper	
28	#	»1066.01-7...	Lock	

Side access doo: mechanism

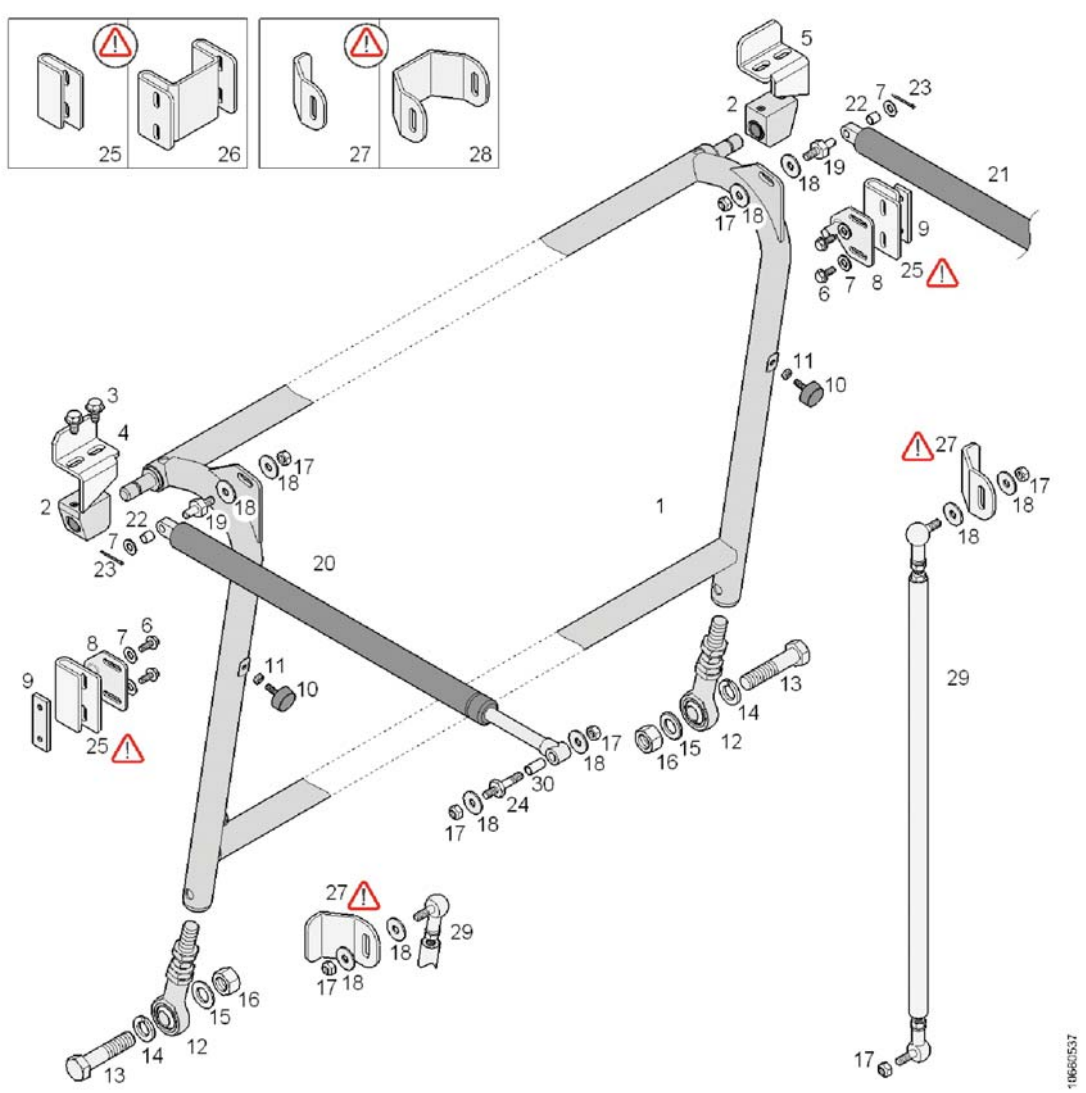

Pos.	Q.	Part n°	Description	Specification
1	1	»1066.01-25..	Side access doo: frame	
2	2	653400030	Mounting bracket	
3	4	10519579	Screw	M8x16 k.=8.8
4	1	10704170	Bracket	
5	1	10704171	Bracket	
6	4	660259008	Screw	M6x16
7	6	660625806	Washer	DIN 125 A8,4 MAT:IN
8	2	10958849	Cam	MAT:IN
9	2	10639034	Fastener	62x20x5
10	2	90604926	Stop	55 Shore A - M6x26
11	2	660207410	Lock nut	DIN 980 M6x1,00 k.=10
12	2	10842537	Tie-rod	
13	2	660249301	Screw	DIN 931 M16x2x70 k.=8.8
14	2	660636802	Coil spring lock washer	DIN 127 Ø16
15	2	660630992	Washer	DIN 125 M16 (17x30x3)
16	2	660209927	Nut	DIN 934 M16x2 MAT: IN
17	10	660207107	Lock nut	DIN 980 M8x1,25 k.=8
18	12	660625907	Washer	DIN 9021 A8,4 MAT:IN

Side access doo: mechanism

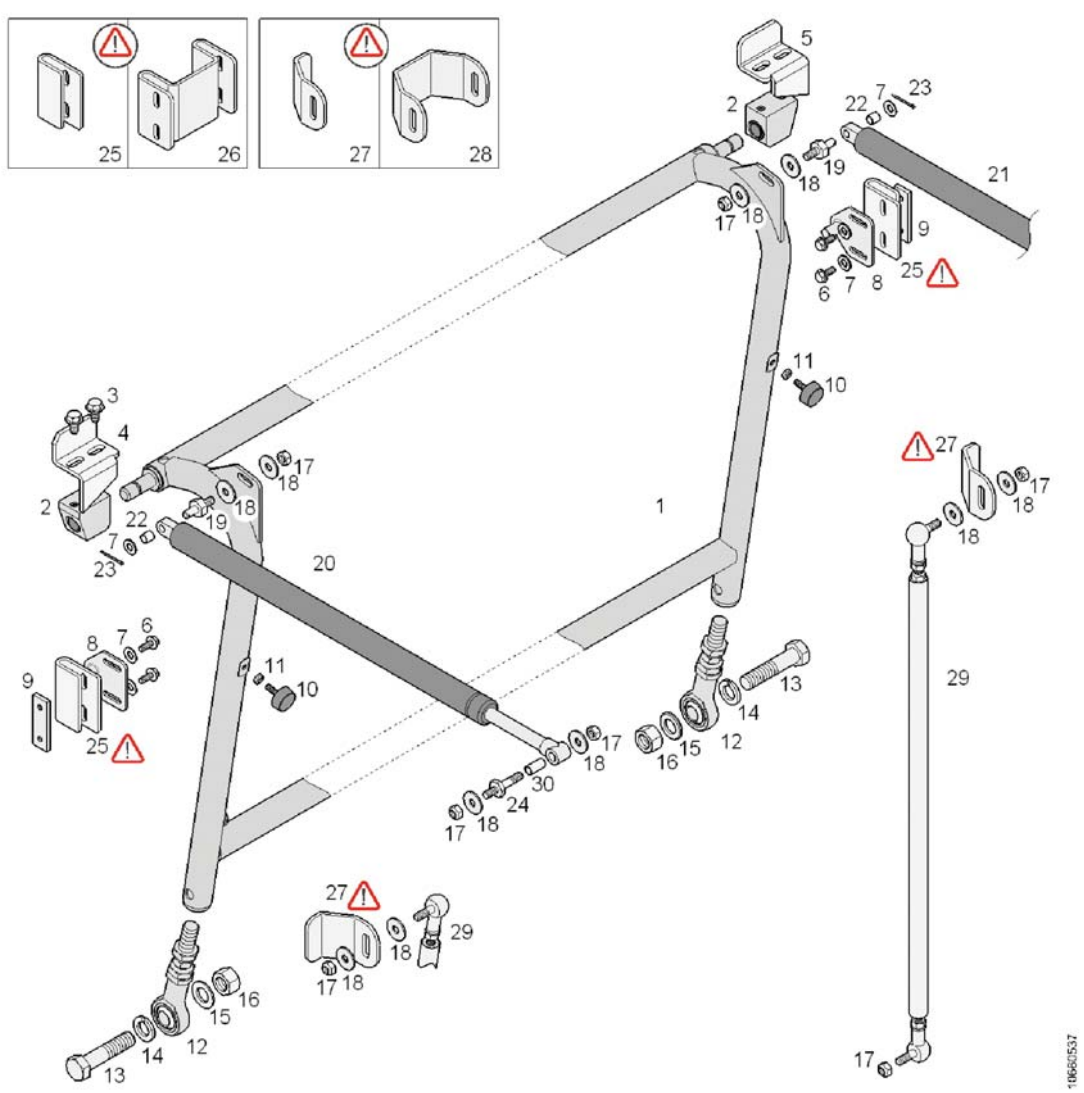

Pos.	Q.	Part n°	Description	Specification
19	2	643405080	Pivot pin	M8 l.=40mm
20	1	10892999	Gasstrut	800N
21	1	10892998	Gasstrut	800N
22	2	10828504	Bushing	MAT:IN Ø10xØ8 l.=10mm
23	2	660615901	Split pin	DIN 94 2x25
24	2	660200804	Pin	M8
25	#	10704168	Bracket	
26	#	10704166	Bracket	
27	#	90610996	Bracket	
28	#	90601991	Bracket	
29	2	90611339	Rod	
30	2	10609177	Bushing	MAT:IN Ø10xØ8 l.=20mm

Rod

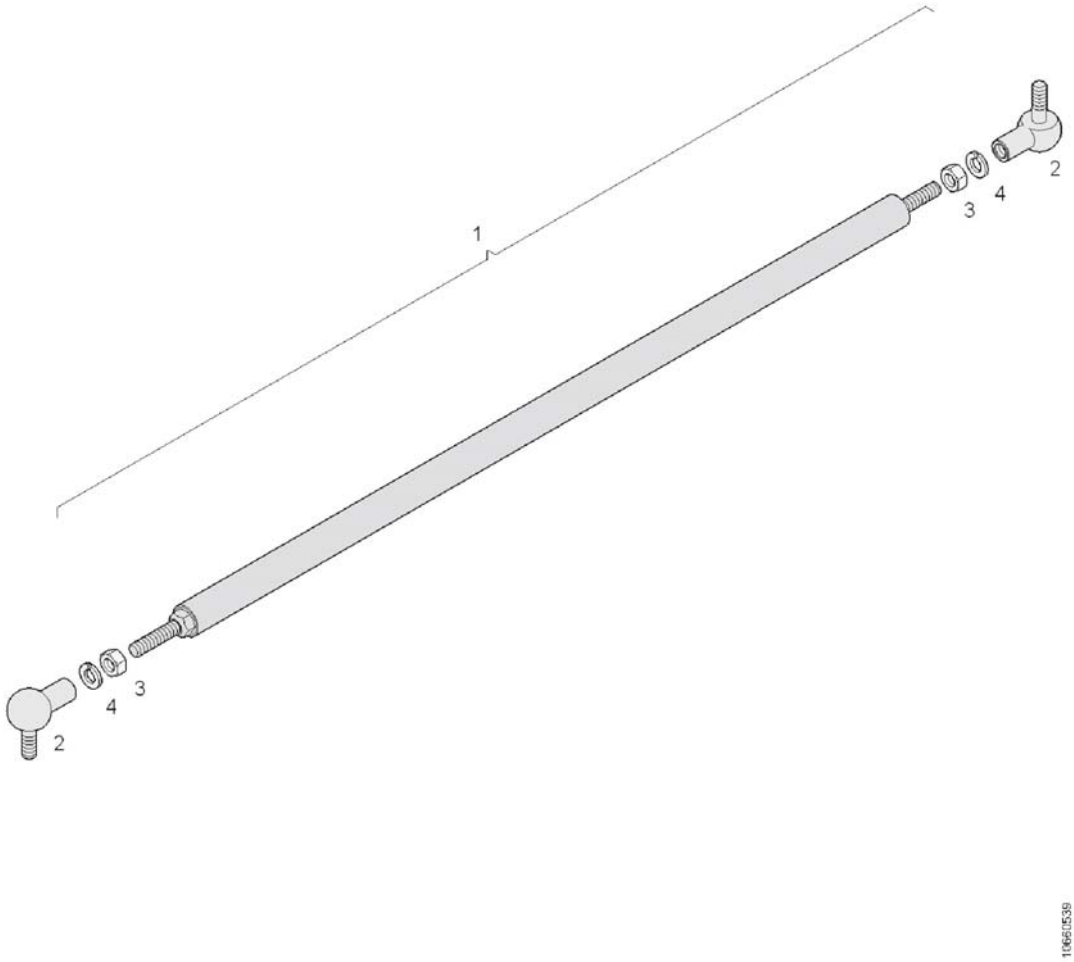

Pos.	Q.	Part n°	Description	Specification
1	#	90611339	Rod	
		-		
2	*2	634303220	Ball joint	SDRD Re
3	*2	660203201	Nut	DIN 934 M8x1.25 k.=8
4	*2	660636400	Coil spring lock washer	DIN 127 A8

Side access doo: frame (TX45)

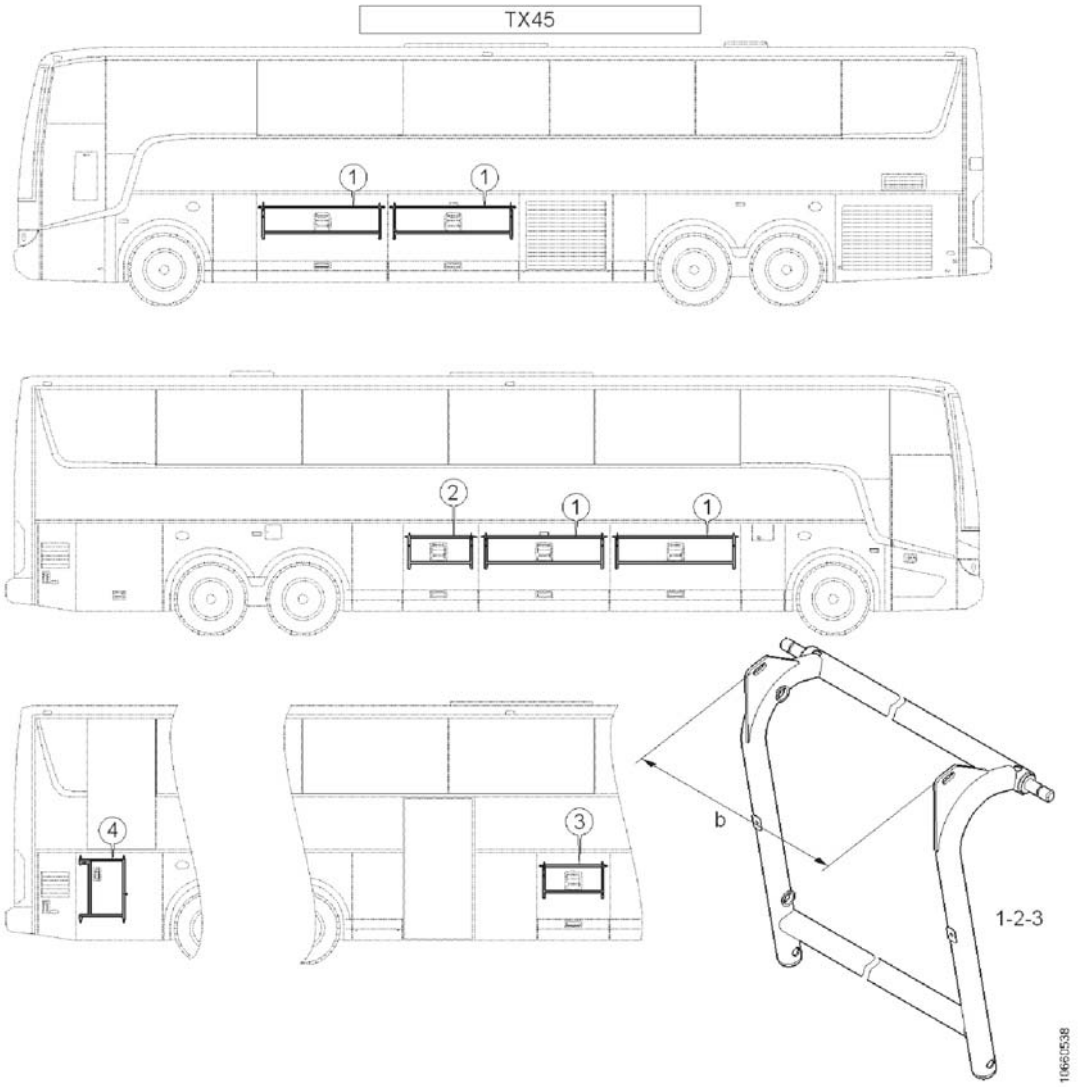

Pos.	Q.	Part n°	Description	Specification
1	4	90611335	Frame	b.=1618mm
2	1	90611344	Frame	b.=833mm
3	1	90612065	Frame	b.=796.5
4	1	10775524	Frame	

Side access doo: frame (TX40)

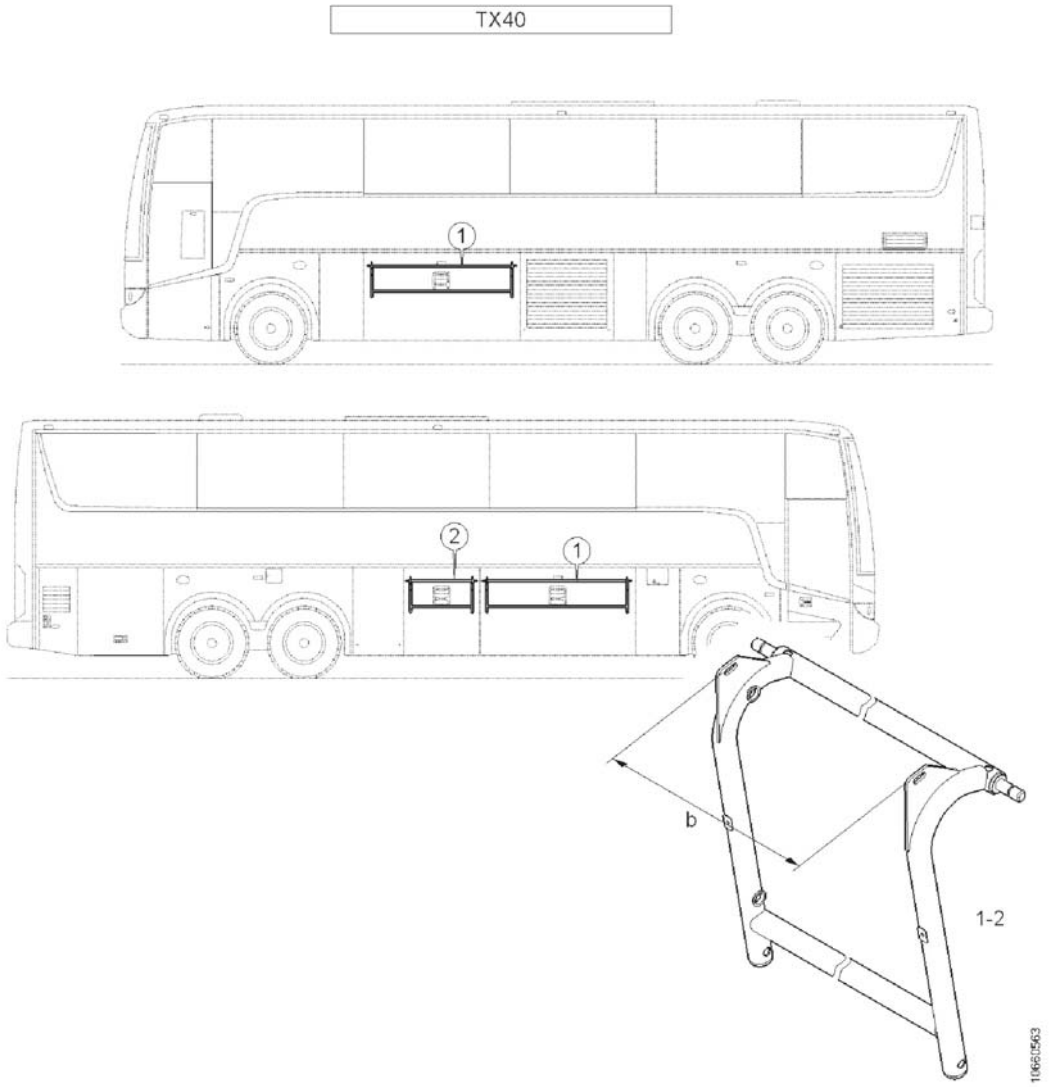

Pos.	Q.	Part n°	Description	Specification
1	2	90612086	Frame	b.=1978mm
2	1	90611344	Frame	b.=833mm

Tie-rod: parts

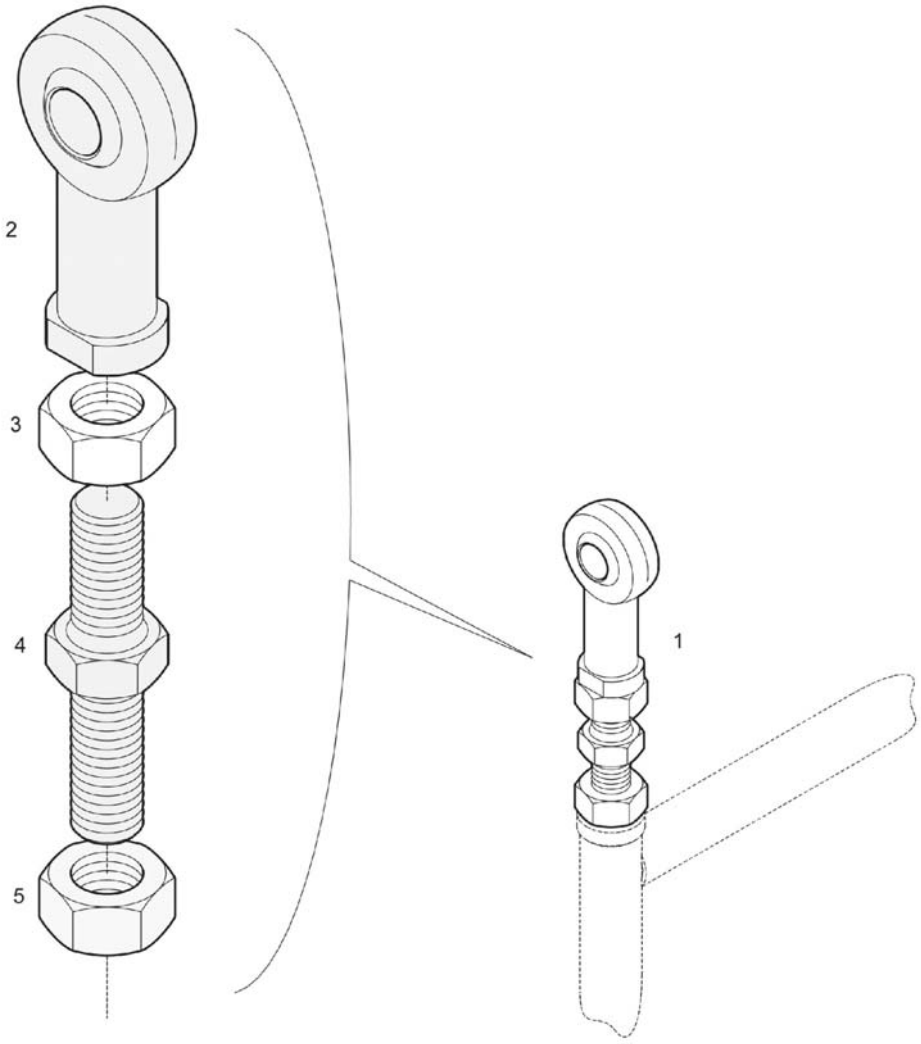

Pos.	Q.	Part n°	Description	Specification
1	1	10842537	Tie-rod	
2	*1	10747552	Articulation	M16 Li
3	*1	10635560	Nut	DIN 439 M16x2 Li
4	*1	10841219	Rod	M16
5	*1	660206808	Nut	DIN 439 M16x2,00 k.=4

Mud guards

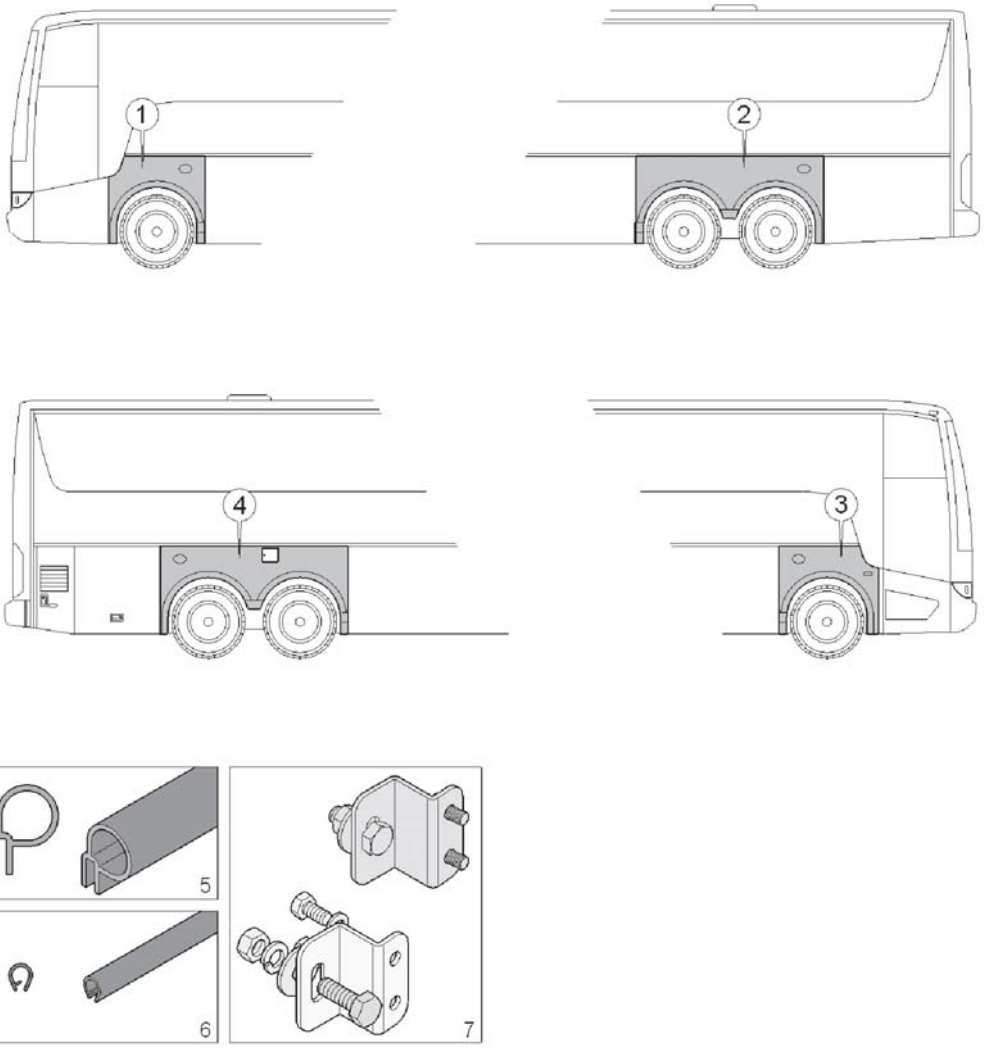

Pos.	Q.	Part n°	Description	Specification
1	1	11336820	Mud guard	
2	1	11336823	Mud guard	
3	1	11336822	Mud guard	
4	1	11336824	Mud guard	
		-		
5	#m	10699576	Profile	MAT: R/ST
6	#m	660063811	Profile	MAT:R/ST
		-		
7	#	90611845	Set of assembly parts	

Rocker arm

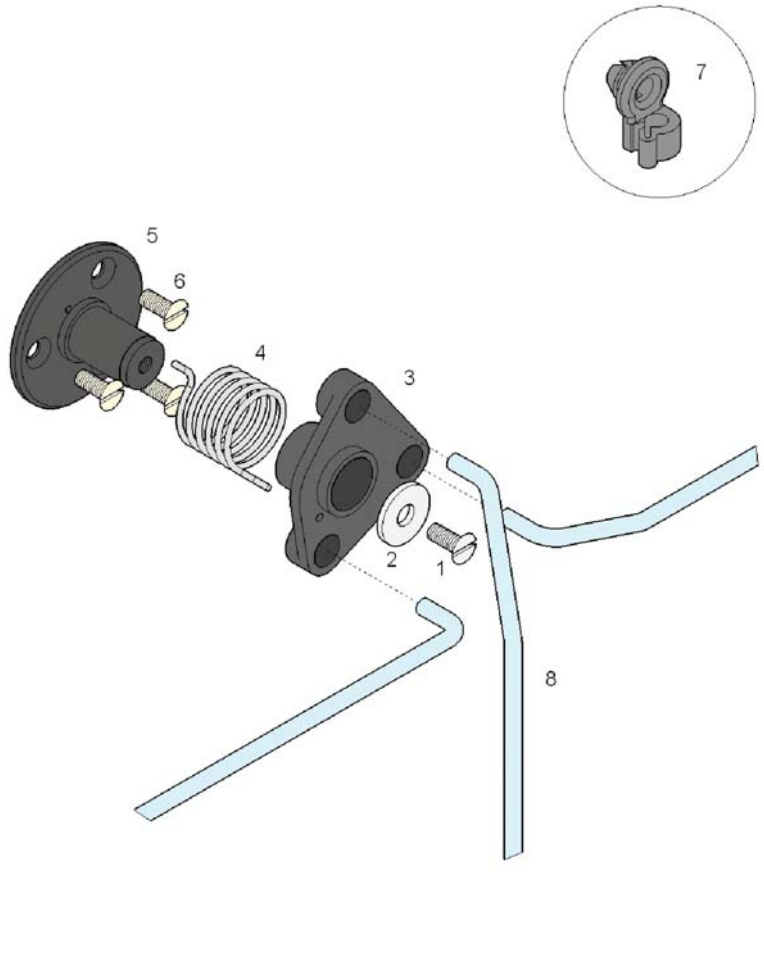

Pos.	Q.	Part n°	Description	Specification
1	1	660280704	Screw	DIN 963 M4x10 MAT:IN
2	1	660621505	Washer	DIN 9021 5,3x15x1,6 MAT:IN
3	1	10962553	Rocker arm	
4	1	10781197	Spring	
5	1	90605354	Shaft	
6	3	660280702	Screw	DIN 963 M4x0,70x10mm k.=4.8
		-		
7	#	10652072	Keeper	
		-		
8	#	»1066.01-1...	Side access door + accessories	

Gasstruts

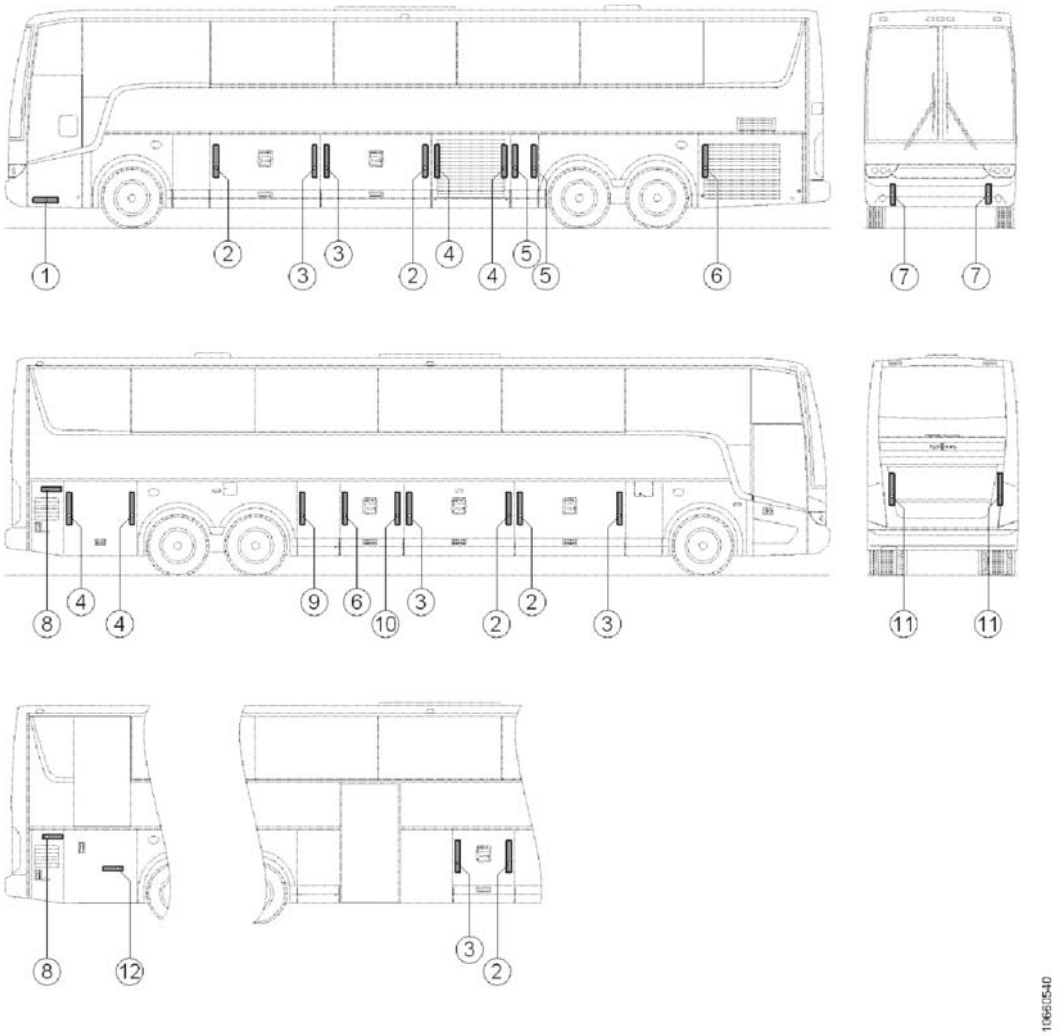

Pos.	Q.	Part n°	Description	Specification
1	1	10541787	Gasstrut	150N
2	4	10706652	Gasstrut	1300N
3	4	10883503	Gasstrut	1200N
4	4	660173238	Gasstrut	600N
5	2	660173227	Gasstrut	400N
6	2	10883505	Gasstrut	1000N
7	2	91100619	Gasstrut	800N
8	1	10880735	Gasstrut	100N
9	1	660173228	Gasstrut	800N
10	1	10892998	Gasstrut	800N
11	2	660173229	Gasstrut	1000N
12	1	10750567	Gasstrut	1000N

Gasstruts (TX40)

TX40

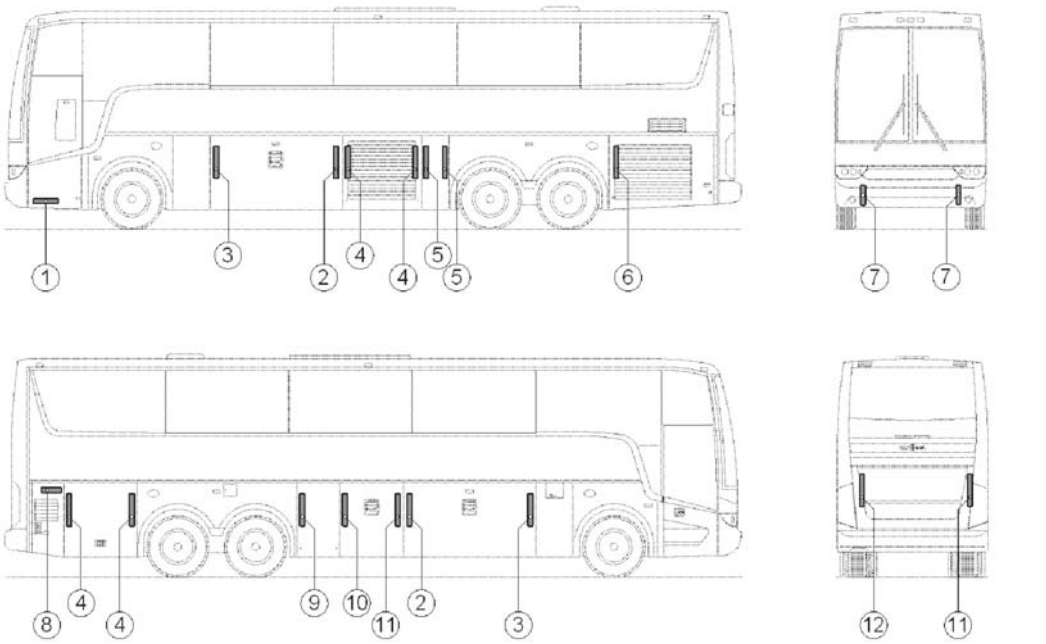

10661562

Pos.	Q.	Part n°	Description	Specification
1	1	10541787	Gasstrut	150N
2	2	10706652	Gasstrut	1300N
3	2	10883503	Gasstrut	1200N
4	4	660173238	Gasstrut	600N
5	2	660173227	Gasstrut	400N
6	1	10883503	Gasstrut	1200N
7	2	91100619	Gasstrut	800N
8	1	10880735	Gasstrut	100N
9	1	660173228	Gasstrut	800N
10	1	10883505	Gasstrut	1000N
11	1	10892998	Gasstrut	800N
12	2	660173229	Gasstrut	1000N

Roof hatch

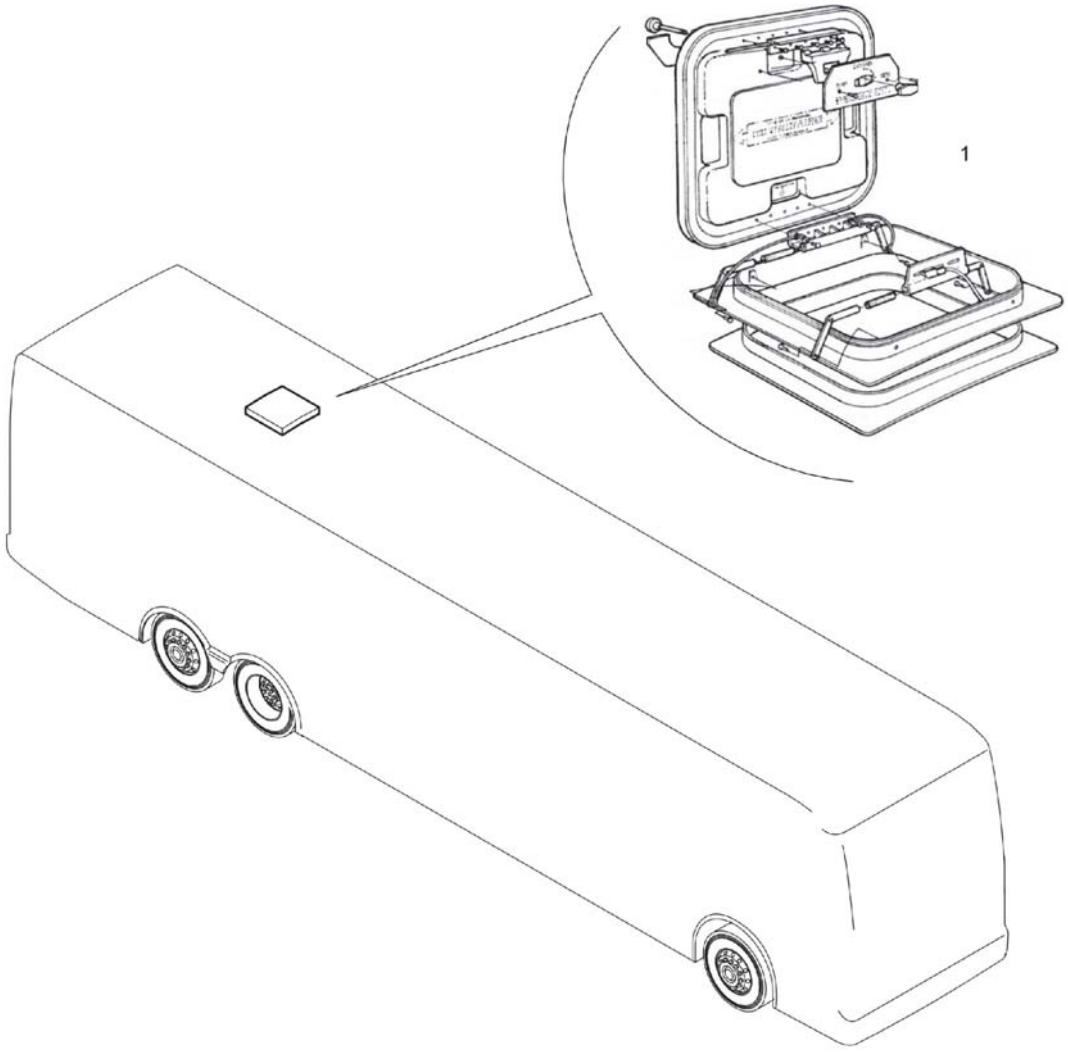

Pos.	Q.	Part n°	Description	Specification
1	1	10879772	Roof hatch	Transpec

Lavatory

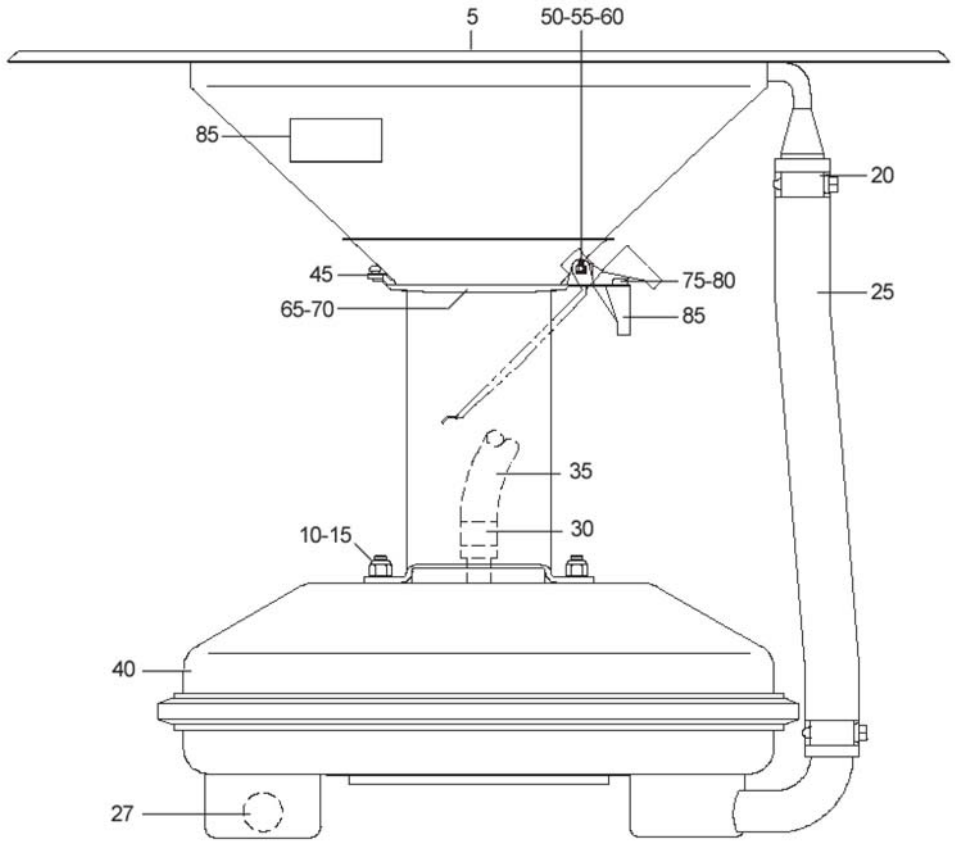

Pos.	Q.	Part n°	Description	Specification
1	1	10707693	Lavatory	
5	*1	10697241	Basic toilet	
10	*4	10697243	Lock nut	
15	*4	10697245	Washer	
20	*4	10697247	Hose clip	
25	*1	10916159	Hose	Ø7/8" l.=20.0"
27	*1	10916160	Hose	Ø7/8" l.=24.0"
30	*2	10697249	Hose clip	
35	*1	10916161	Hose	Ø1/2" l.=15.0"
40	*1	10873710	Pump	
45	*1	10697252	Bumper	
50	*4	10697253	Bearing	
55	*1	10697254	Split pin	
60	*1	10697255	Pin	
65	*1	10697256	Flap	
70	**1	10916162	Counterweight	
75	**2	10697257	Screw	
80	**2	10697258	Washer	

Lavatory

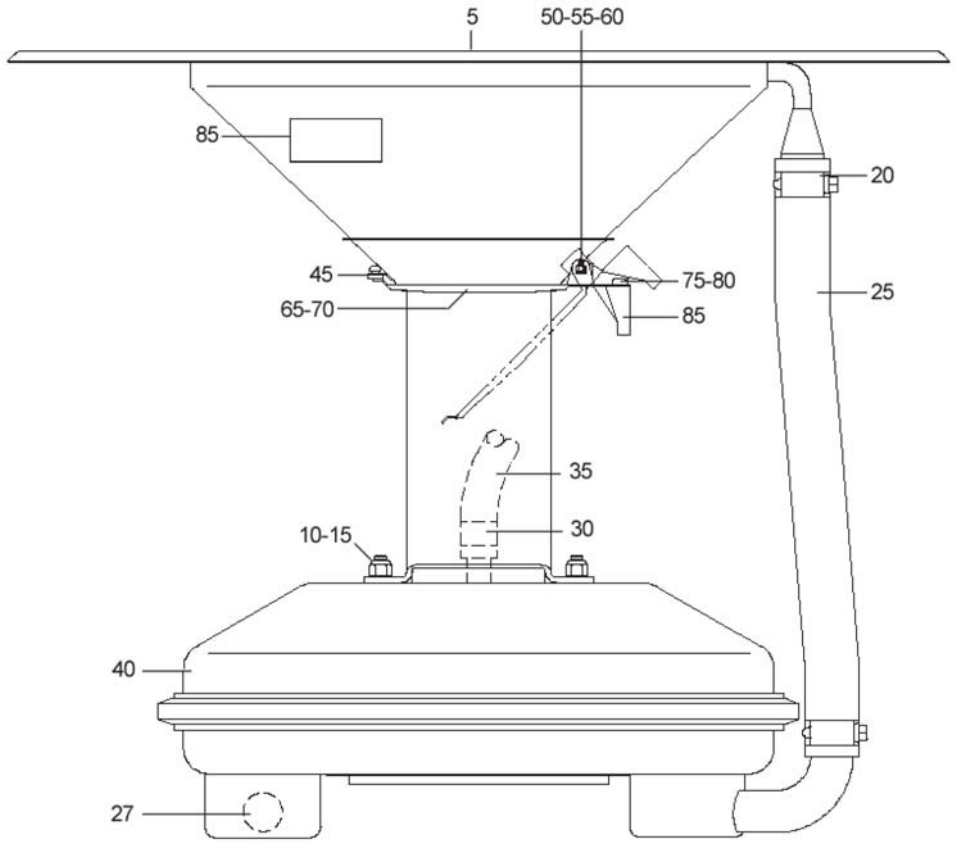

Pos.	Q.	Part n°	Description	Specification
85	*1	10697259	Name plate	

Lavatory

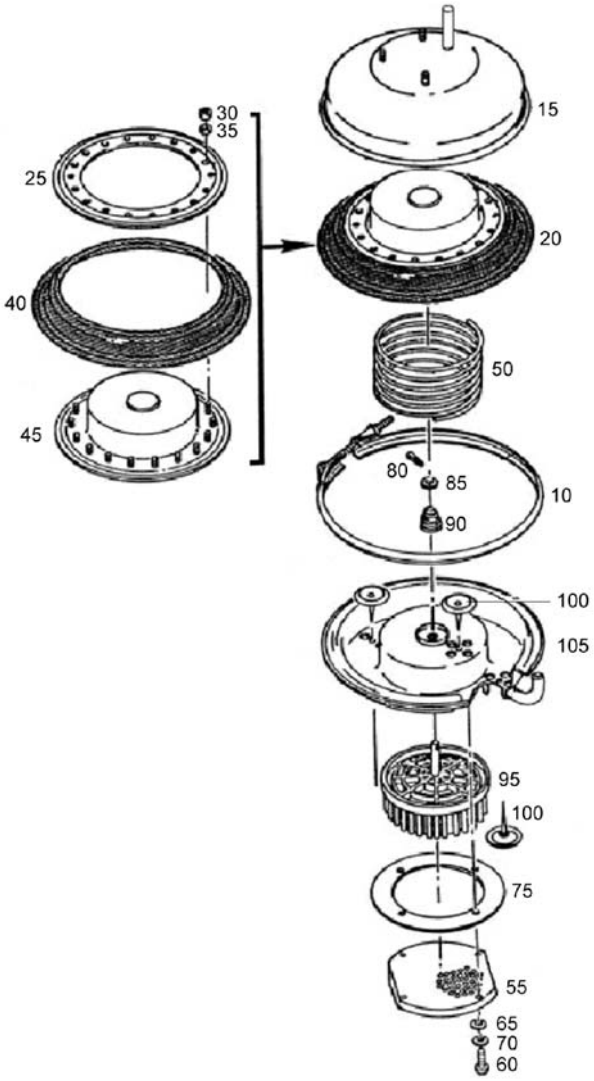

Pos.	Q.	Part n°	Description	Specification
1	1	10873710	Pump	
10	*1	10697261	Clamp	
15	*1	10916157	Cover	
20	*1	10697263	Housing	
25	**1	10697264	Circlip	
30	**18	10697265	Lock nut	
35	**18	10697266	Washer	
40	**1	10697267	Diaphragm	
45	**1	10697268	Hub	
50	*1	10697269	Spring	
55	*1	10697270	Filter element	
60	*4	10697271	Screw	
65	*4	10697273	Circlip	
70	*4	10697275	Washer	
75	*1	10697277	Sealing washer	
80	*1	10697278	Split pin	
85	*1	10697279	Washer	
90	*1	10697280	Spring	

Lavatory

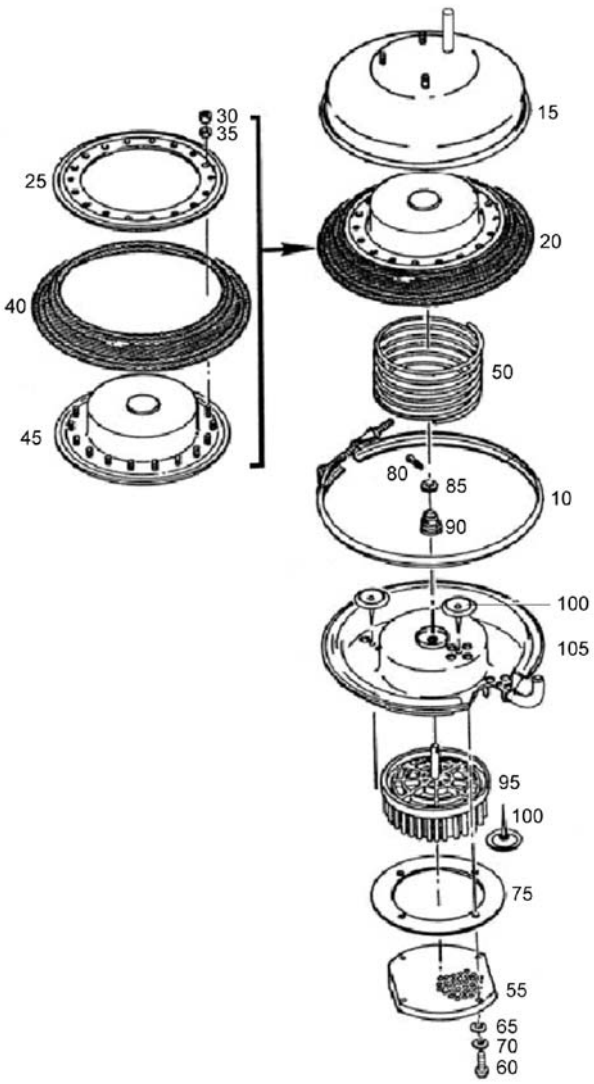

Pos.	Q.	Part n°	Description	Specification
95	*1	10697281	Brush	
100	*2	660582625	Flap	
105	*1	10916158	Cover	

Lavatory: cabin (without lift)

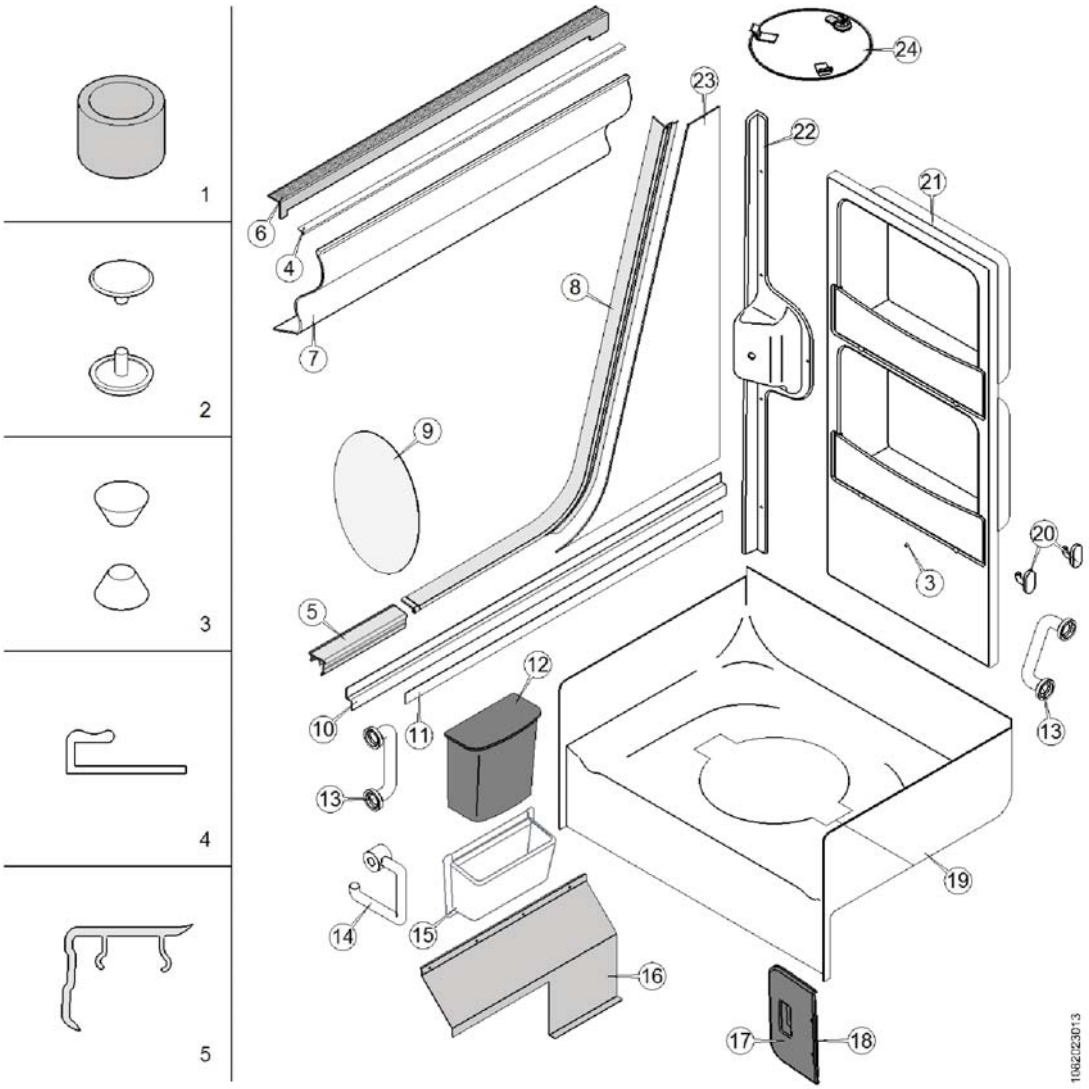

Pos.	Q.	Part n°	Description	Specification
1	4	10614946	Shim	16x2 l.=12mm
2	#	660463017	Screw cover	Ø12 MAT: PVC (W)
3	1	10612841	Stop	
4	1	10639562	Section synthetic material	(RAL 9016) l.=4600mm
5	#m	10952609	Section synthetic material	(RAL 7001)
6	1	10955935	Aluminium section	l.=1032mm
7	1	10948055	Protection	(W)
8	1	10932139	Section synthetic material	(RAL 7012)
9	1	10543125	Mirror	316x205x3mm
10	1	10938639	Protection shield	(W)
11	1	11376387	Aluminium section	(RAL 9010) 1000x30x1.5mm
12	1	660582702	Dustbin	4.5L (RAL 7012)
13	2	660174312	Grab handle	(W)
14	1	660583202	Holder	(W)
15	1	10613112	Holder	(W)
16	1	11250307	Protection shield	519x348.5x1mm
17	1	10609814	Access door	(RAL 7012)
18	*1	10643230	Hinge	

Lavatory: cabin (without lift)

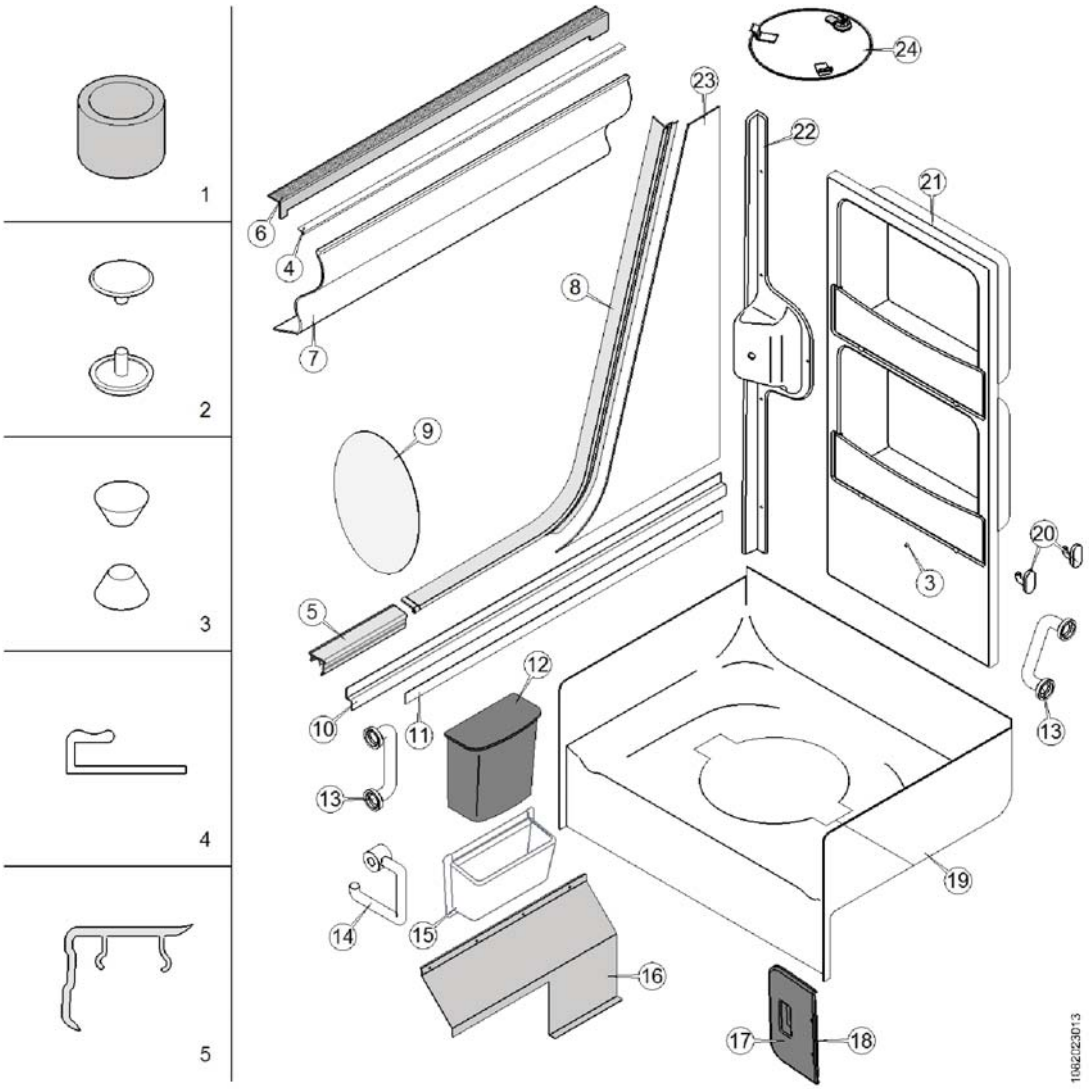

Pos.	Q.	Part n°	Description	Specification
19	1	10653928	Trim panel	MAT: P
20	2	10538831	Coat hanger	57x27mm (W)
21	1	11352292	Locker	(W)
22	1	10868078	Protection	(W)
23	1	11382204	Angled pillar	960x515x4mm (W)
24	1	10678506	Protection shield	(W)

Lavatory: installation

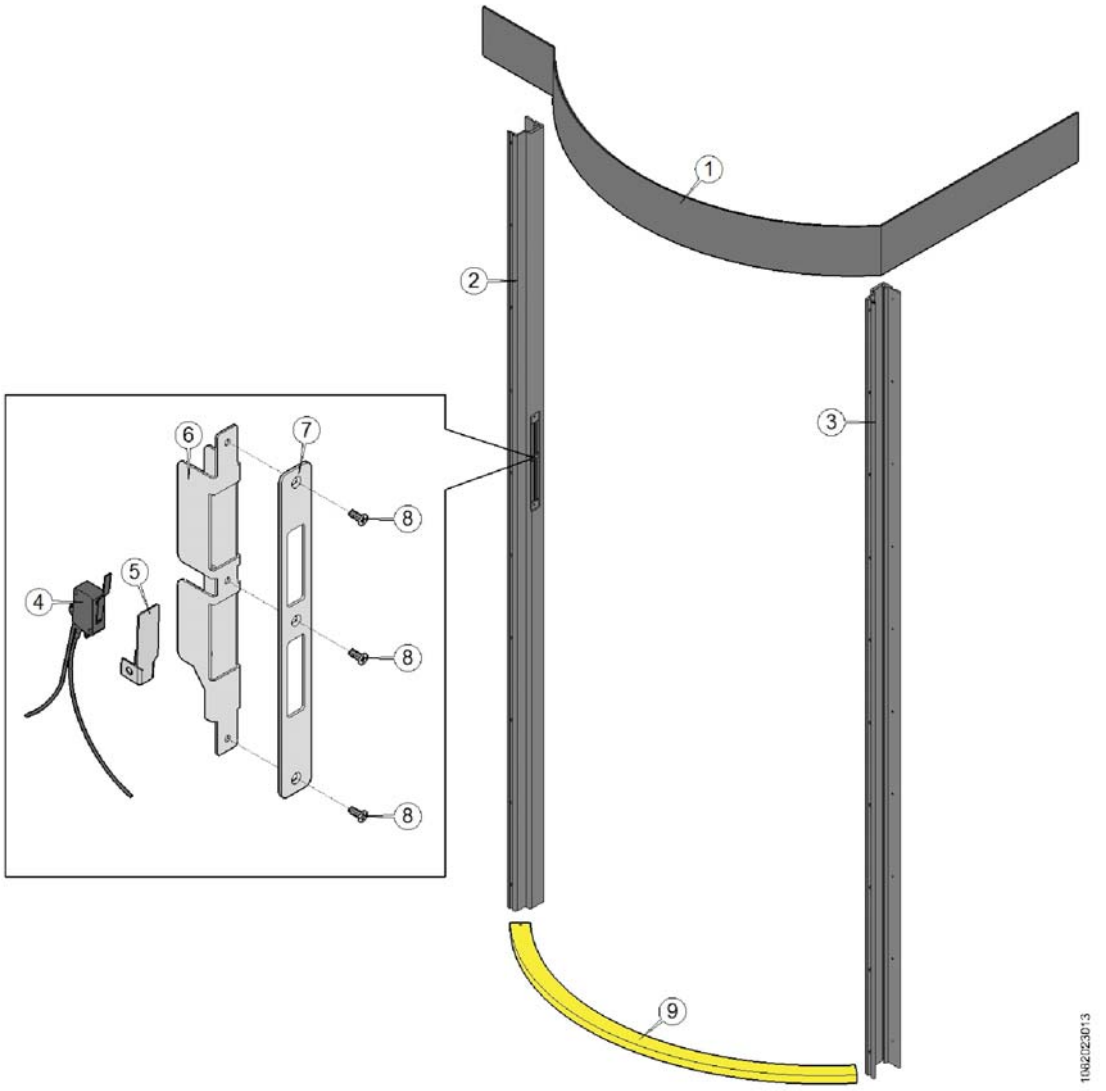

Pos.	Q.	Part n°	Description	Specification
1	1	11000660	Protection shield	
2	1	11069092	Profile	l.=1900mm (RAL 7012)
3	1	11069091	Profile	l.=1900mm (RAL 7012)
4	1	11068613	Switch, with wiring harness	
5	1	10681926	Plate	
6	1	11068646	Plate	
7	1	11068432	Plate	
8	3	10585999	Screw	DIN 965 M4x10 MAT:IN
9	1	11000290	Profile	(RAL 1021)

Lavatory: cabin (with lift)

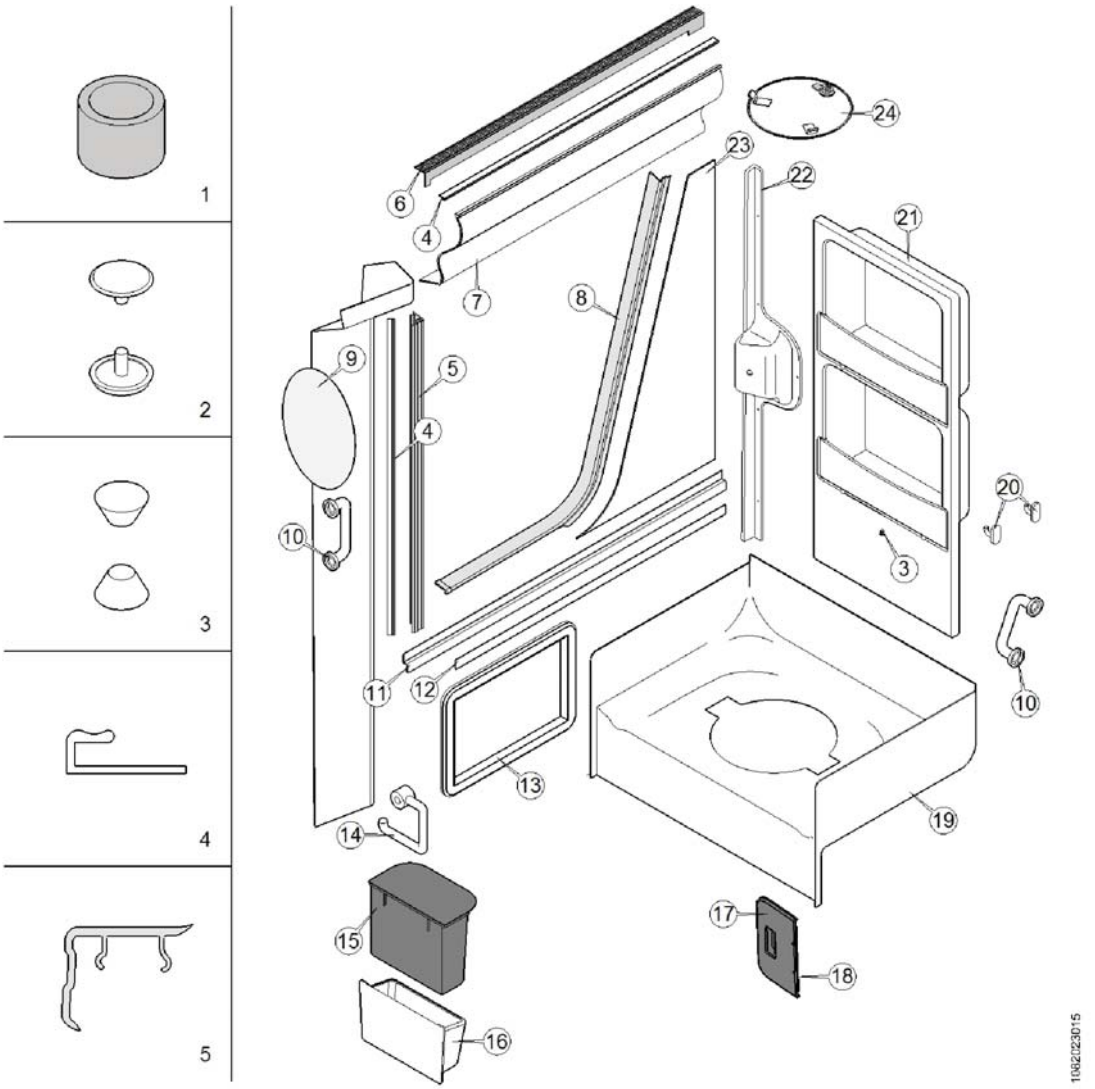

Pos.	Q.	Part n°	Description	Specification
1	4	10614946	Shim	16x2 l.=12mm
2	#	660463017	Screw cover	Ø12 MAT: PVC (W)
3	1	10612841	Stop	
4	1	10639562	Section synthetic material	(RAL 9016) l.=4600mm
5	#m	10952609	Section synthetic material	(RAL 7001)
6	1	10955935	Aluminium section	l.=1032mm
7	1	10948055	Protection	(W)
8	1	10932139	Section synthetic material	(RAL 7012)
9	1	10543125	Mirror	316x205x3mm
10	1	660174312	Grab handle	(W)
11	1	10938639	Protection shield	(W)
12	1	11376387	Aluminium section	(RAL 9010) 1000x30x1.5mm
13	2	11376531	Cover plate	
14	1	660583202	Holder	(W)
15	1	660582702	Dustbin	4.5L (RAL 7012)
16	1	10613112	Holder	(W)
17	1	10609814	Access door	(RAL 7012)
18	*1	10643230	Hinge	

Lavatory: cabin (with lift)

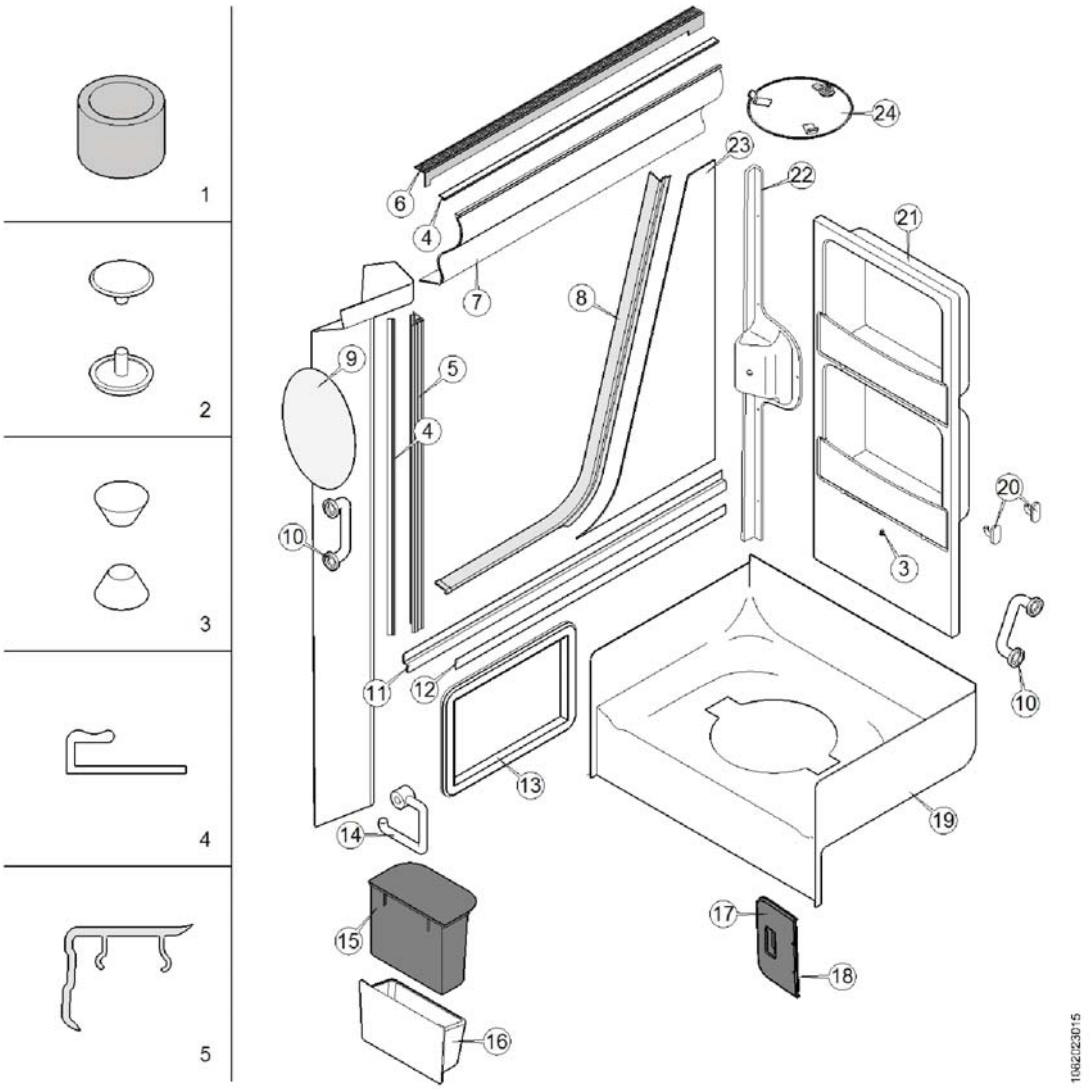

Pos.	Q.	Part n°	Description	Specification
19	1	10653928	Trim panel	MAT: P
20	2	10538831	Coat hanger	57x27mm (W)
21	1	11352292	Locker	(W)
22	1	10868078	Protection	(W)
23	1	11382204	Angled pillar	960x515x4mm (W)
24	1	10678506	Protection shield	(W)

Lavatory: cabin

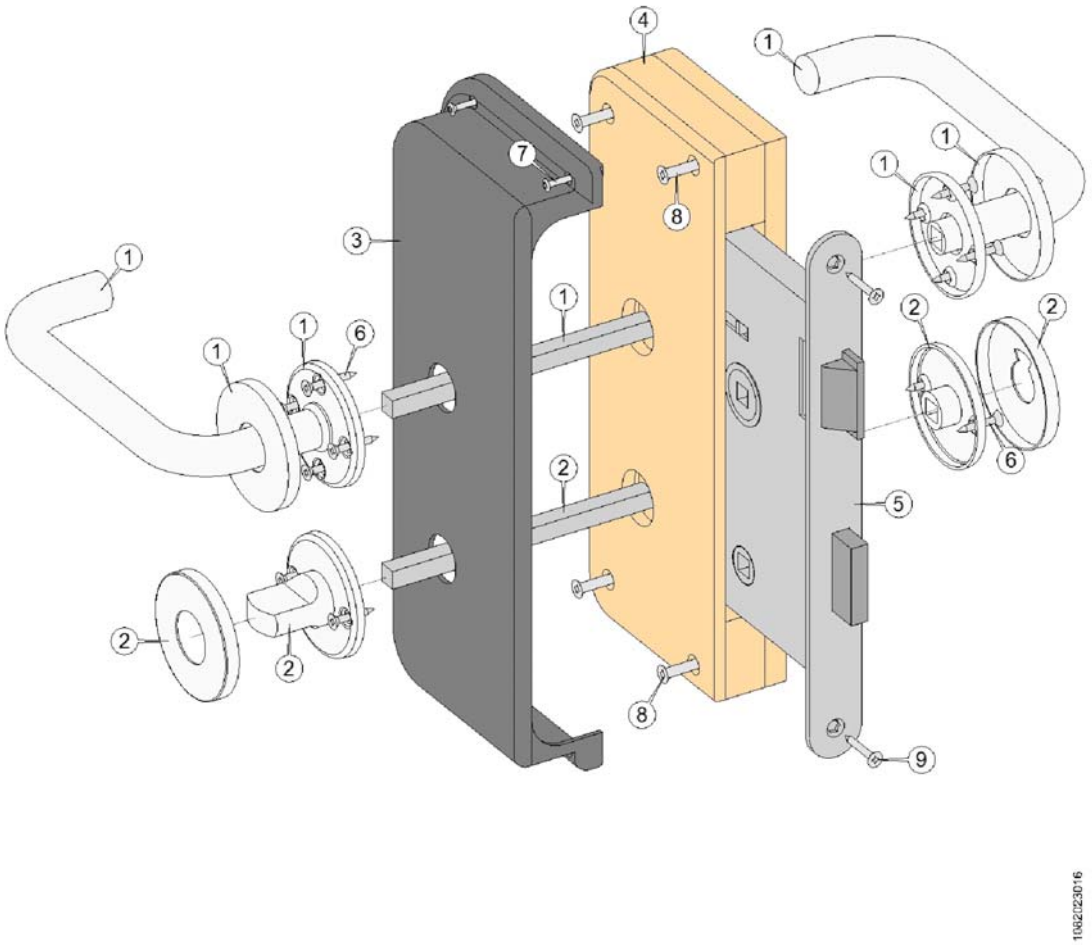

Pos.	Q.	Part n°	Description	Specification
1	1	11084630	Grab handle	MAT:IN
2	1	11084632	Protection	MAT:IN
3	1	11064914	Protection shield	(RAL 7012)
4	1	11063017	Holder	
5	1	11064633	Lock	
6	12	660461100	Screw	DIN 97 M3,5 X 16
7	4	660274306	Screw	DIN 7983 2,9x19
8	4	660462506	Wood-screw	DIN97 Ø4x45mm
9	2	660462518	Wood-screw	Ø4x40

Lavatory: installation

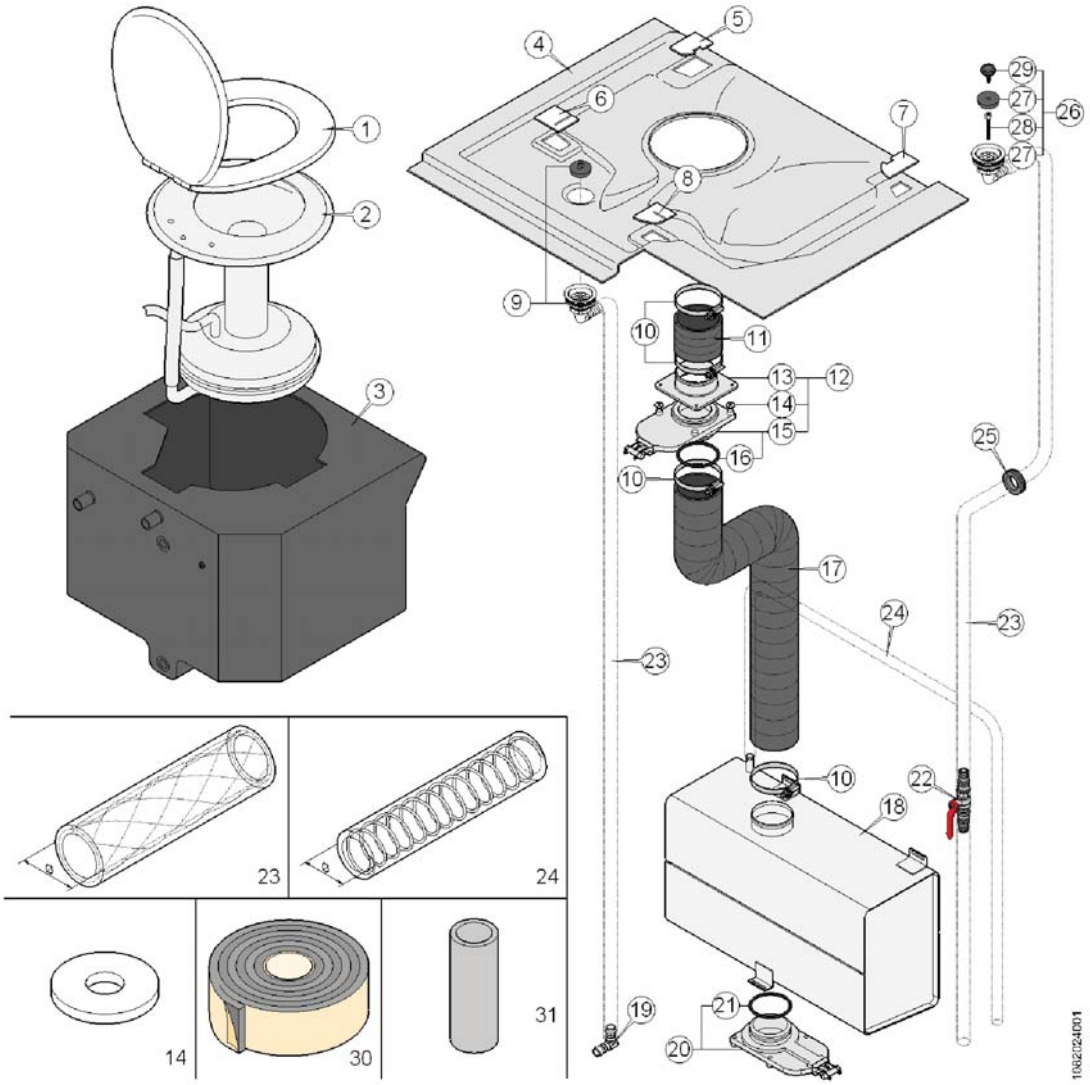

Pos.	Q.	Part n°	Description	Specification
1	1	11188716	Toilet seat	
2	1	10707693	Lavatory	
3	1	10702999	Tank	
4	1	11367488	Plate	
5	1	10721695	Protection	
6	1	10721681	Protection	
7	1	10721702	Protection	
8	1	10721698	Protection	
9	1	11016025	Drain	90°
10	4	10628956	Hose clip	Ø83-Ø105mm
11	1	11319473	Line	Ø90mm l.=80mm
12	1	10852798	Drain cock	
13	*1	11070968	Connection	Ø88,9
14	*8	660634624	Spacer	6.4x18x2
15	*1	11264396	Drain cock	
16	**1	10984692	Sealing washer	
17	1	11326632	Line	Ø90 MAT:R
18	1	11281962	Tank	(RAL 9005)

Lavatory: installation

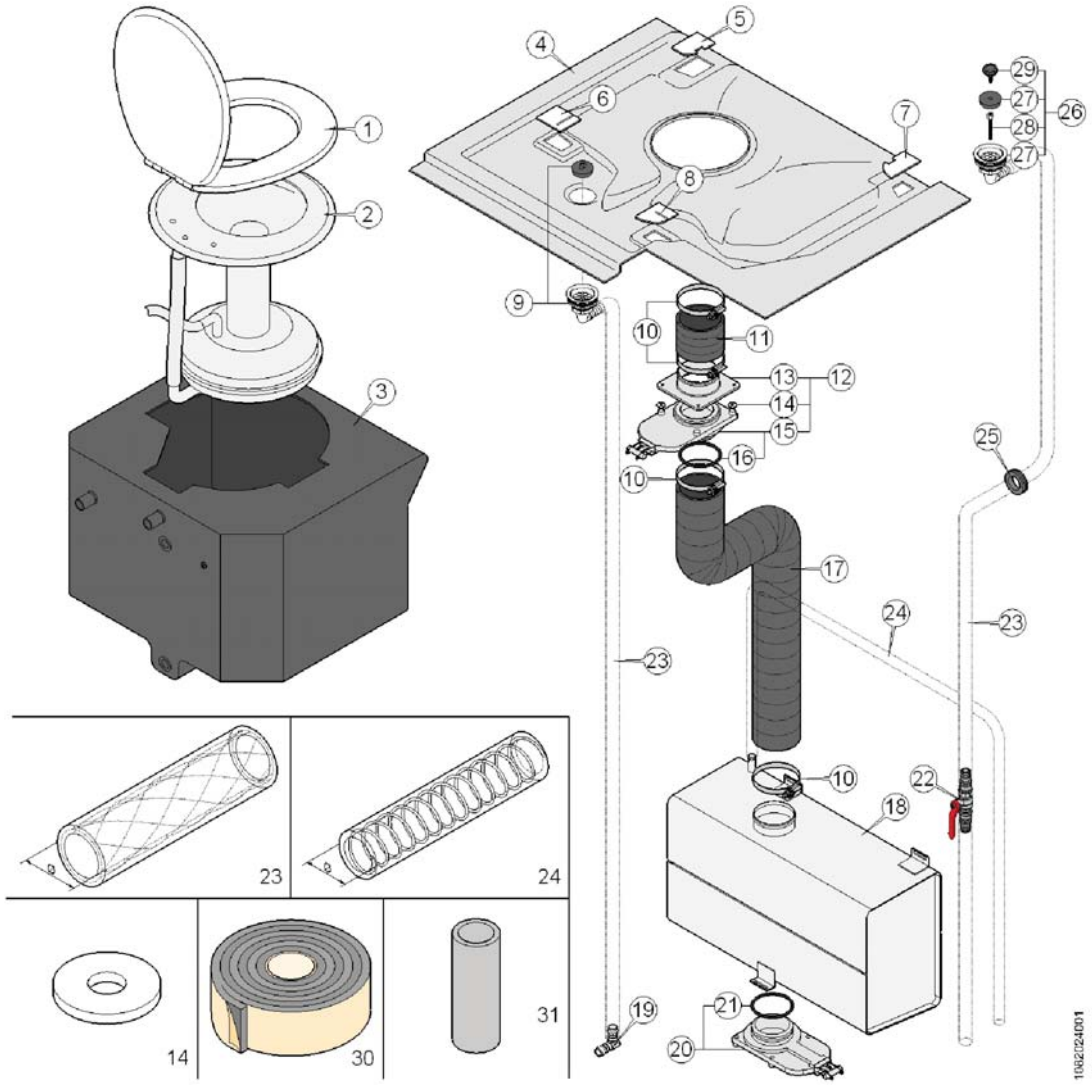

Pos.	Q.	Part n°	Description	Specification
19	1	660581014	Coupling	Ø19mm
20	1	11264396	Drain cock	
21	*1	10984692	Sealing washer	
22	1	10682778	Cock, with accessories	1/2"
23	#m	660091404	Hose	Ø20x4 MAT:P
24	#m	10864914	Hose	Ø16x3 MAT:P
25	1	660779106	Grommet	MAT:R Ø35
26	1	10674855	Drain	
27	*1	11016025	Drain	90°
28	*1	10527804	Threaded rod	M6 - l.=63mm
29	*1	10562527	Button	M6x15
30	#m	660066001	Foam rubber	30x5 l.=20m
31	4	11412573	Spacer	8x1 l.=21.8mm

Lavatory: installation

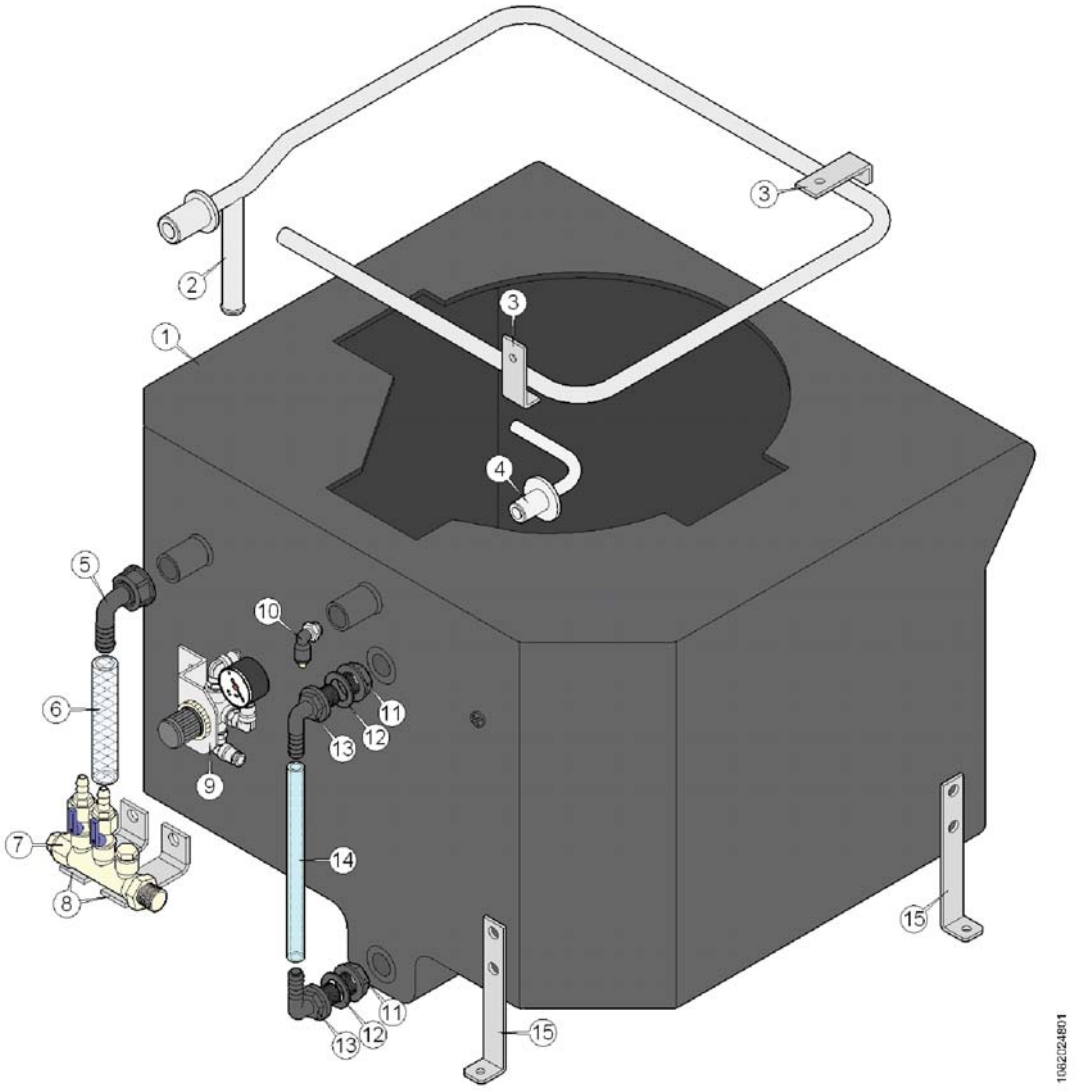

Pos.	Q.	Part n°	Description	Specification
1	1	10702999	Tank	
2	1	10703925	Pipe	Ø15x1,5
3	2	10715900	Bracket	
4	1	10686803	Connection	1/2"xØ12mm
5	1	10872463	Coupling	3/4"x16mm
6	#m	660091202	Hose	Ø16xØ22mm
7	1	10715356	Distributor	
8	2	10694199	Bracket	
9	1	11073694	Governor	
10	1	10692640	Coupling	M14x1,5 - Ø8mm - 90°
11	2	10703299	Nut	1/2"
12	2	10703300	Sealing washer: rubber	33mm
13	2	10703297	Coupling	0.5"x13mm
14	1	621203010	Sight glass	Ø15 l.=200mm
15	4	10716003	Bracket	

Lavatory

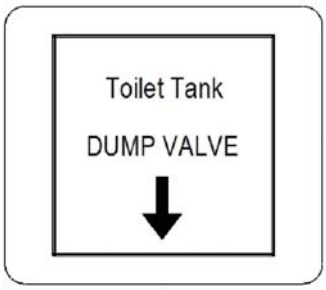

1

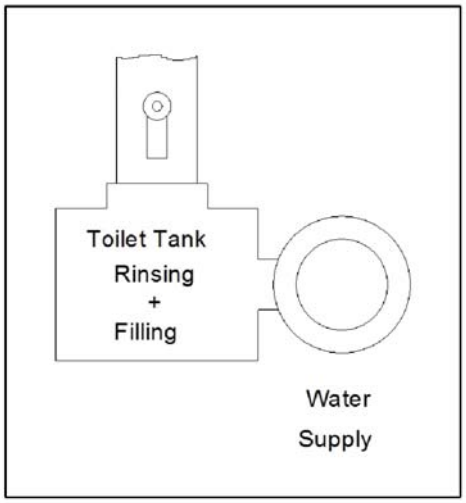

2

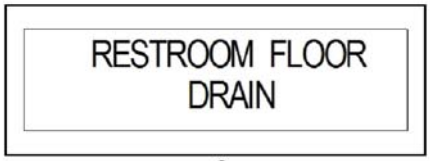

3

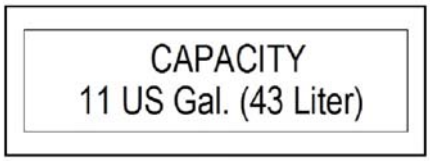

4

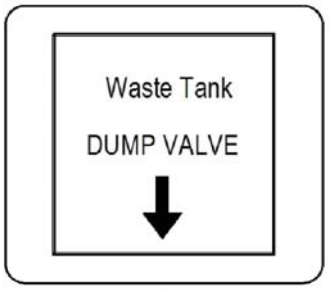

5

1082/250005

Pos.	Q.	Part n°	Description	Specification
1	1	10610822	Sign	
2	1	10689893	Sign	
3	1	10648842	Sign	
4	1	10616464	Sign	
5	1	10610823	Sign	

Wheel suspension arms

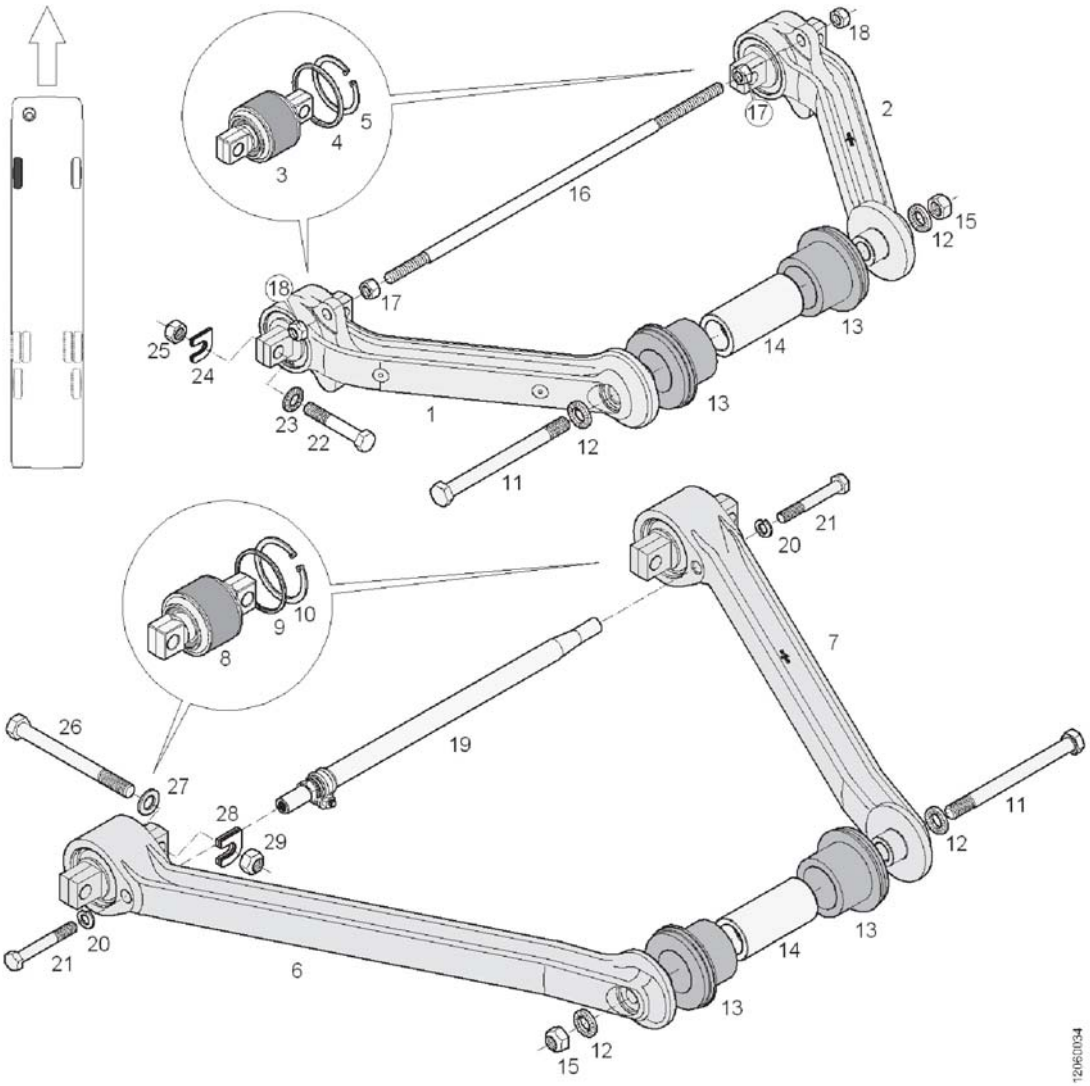

Pos.	Q.	Part n°	Description	Specification
1	1	10687204	Support arm, complete	Li
2	1	10650417	Support arm, complete	Li
	-	-		
3	*1	634301790	Articulation	
4	*1	634301530	Ring	Ø75xØ67x4
5	*1	660635534	Circlip	DIN 472 A75x2,5
		-		
6	1	10646930	Support arm, complete	Li
7	2	10646931	Support arm, complete	
	-	-		
8	*1	634301140	Articulation	
9	*1	634301150	Spacer ring	
10	*1	660635540	Circlip	DIN 472 Ø85x3
		-		
11	2	10647991	Screw	M18x1,5x210 k.=10.9
12	4	660632502	Washer	M18 Ø19,5xØ36x4,8
13	4	624317270	Bush	
14	2	10647957	Shaft	

Wheel suspension arms

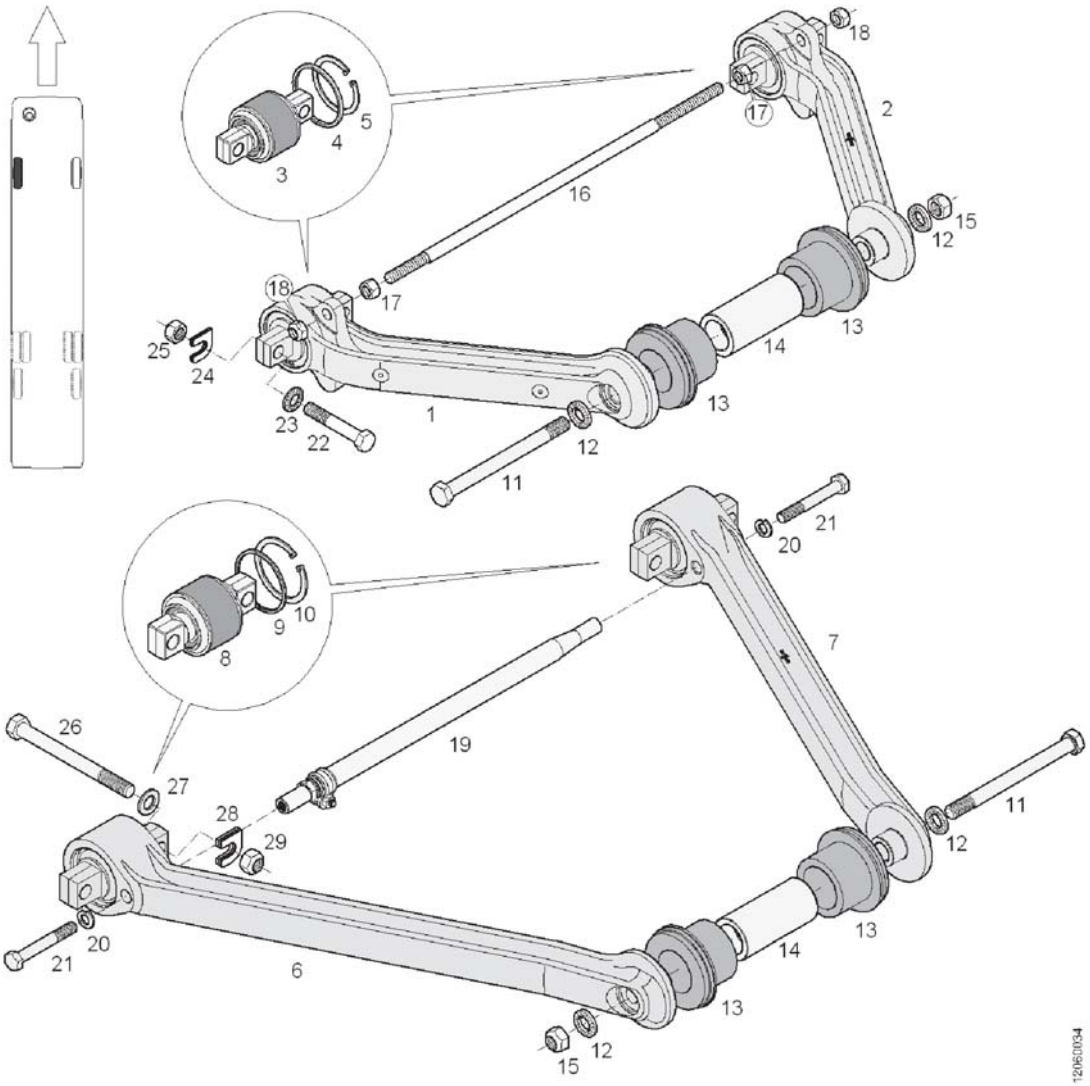

Pos.	Q.	Part n°	Description	Specification
15	2	660207287	Lock nut	DIN 980 M18x1,5 k.=10
16	1	614308010	Rod	
17	2	660203501	Nut	DIN 934 M14x2 k.=8
18	2	660207206	Lock nut	DIN 980 M14x2 k.=8
19	1	634300470	Rod	
20	2	660636700	Coil spring lock washer	DIN 127 A14
21	2	660251247	Screw	DIN 960 M14x1,5x100
22	4	10546442	Screw	DIN 960 M16x1,5x95 k.=10.9
23	4	10580795	Coil spring lock washer	A16
24	#	614306480	shim	d.=1mm
	#	614306490	shim	d.=2mm
	#	614306500	shim	d.=5mm
25	4	660207214	Lock nut	DIN 980 M16x1,5 k.=10
26	4	10707778	Screw	DIN 960 M18x1,5x190 k.=10.9
27	4	660631904	Washer	DIN 125 A19
28	#	614308780	shim	d.=1mm
	#	614308790	shim	d.=2mm
	#	614308800	shim	d.=5mm

Wheel suspension arms

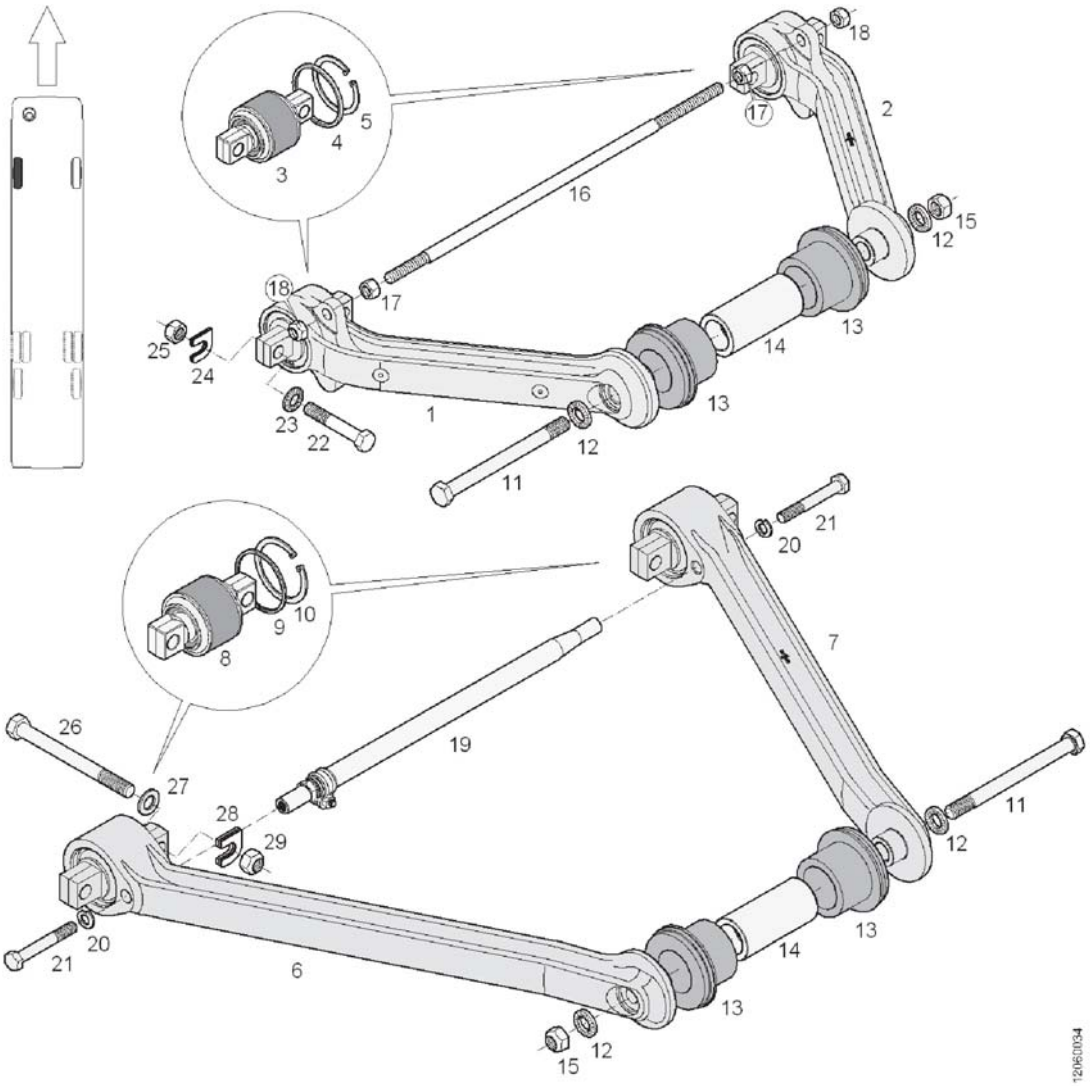

Pos.	Q.	Part n°	Description	Specification
	#	10929181	shim	d.=10mm
29	4	660207287	Lock nut	DIN 980 M18x1,5 k.=10

Wheel suspension arms

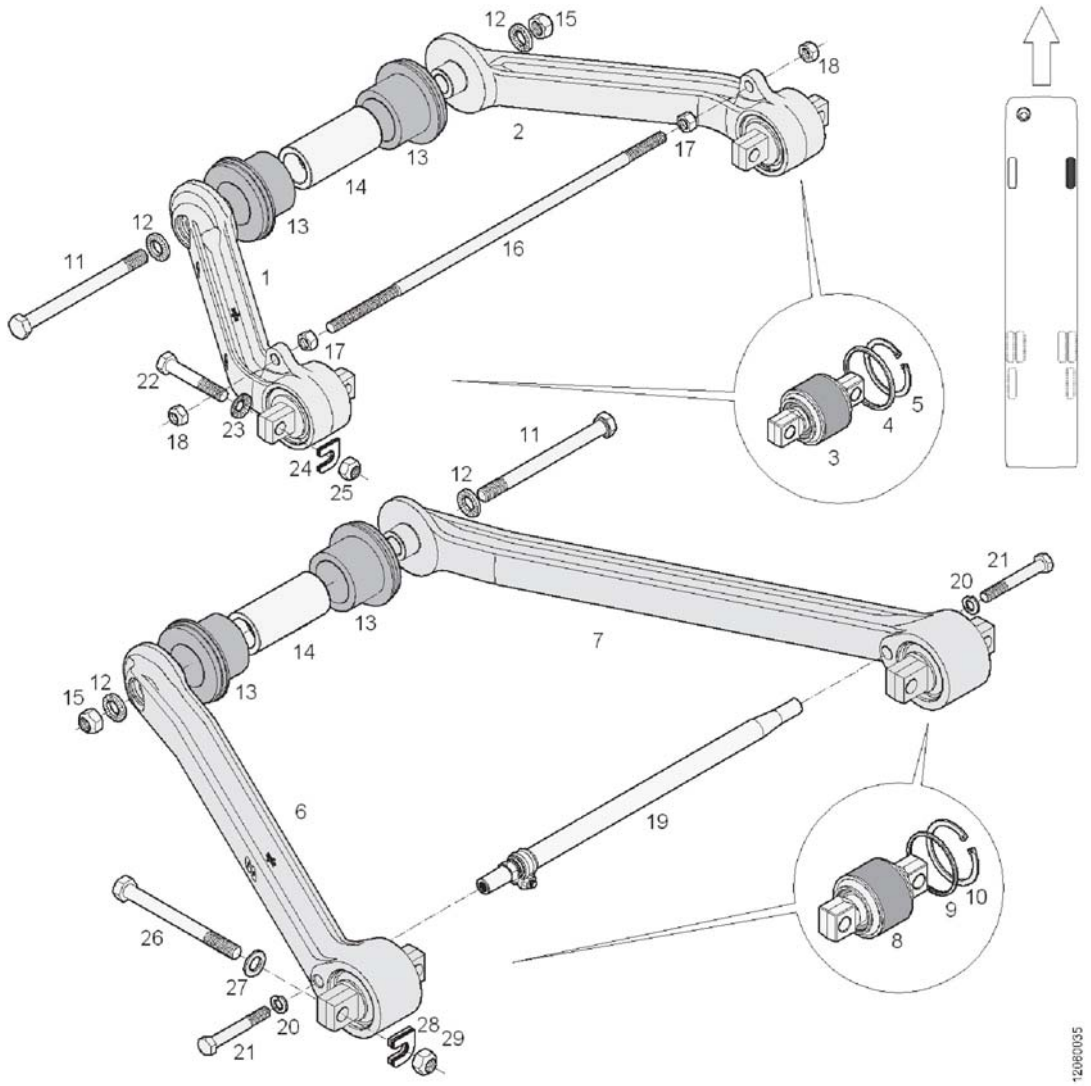

Pos.	Q.	Part n°	Description	Specification
1	1	10687206	Support arm, complete	Re
2	1	10650419	Support arm, complete	Re
	-	-		
3	*1	634301790	Articulation	
4	*1	634301530	Ring	Ø75xØ67x4
5	*1	660635534	Circlip	DIN 472 A75x2,5
		-		
6	1	10686725	Support arm, complete	Re
7	2	10646931	Support arm, complete	
	-	-		
8	*1	634301140	Articulation	
9	*1	634301150	Spacer ring	
10	*1	660635540	Circlip	DIN 472 Ø85x3
		-		
11	2	10647991	Screw	M18x1,5x210 k.=10.9
12	4	660632502	Washer	M18 Ø19,5xØ36x4,8
13	4	624317270	Bush	
14	2	10647957	Shaft	

Wheel suspension arms

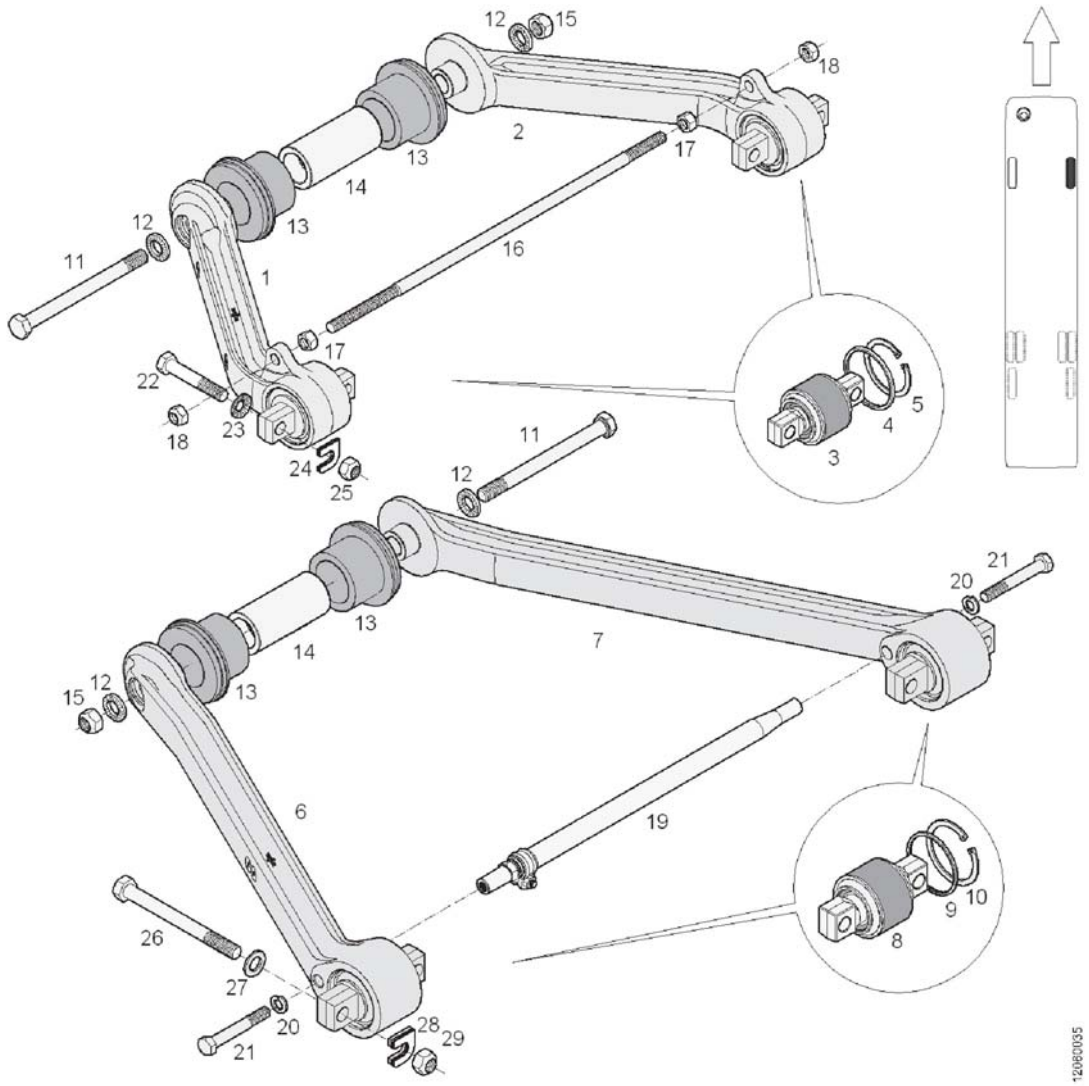

Pos.	Q.	Part n°	Description	Specification
15	2	660207287	Lock nut	DIN 980 M18x1,5 k.=10
16	1	614308010	Rod	
17	2	660203501	Nut	DIN 934 M14x2 k.=8
18	2	660207206	Lock nut	DIN 980 M14x2 k.=8
19	1	634300470	Rod	
20	2	660636700	Coil spring lock washer	DIN 127 A14
21	2	660251247	Screw	DIN 960 M14x1,5x100
22	4	10546442	Screw	DIN 960 M16x1,5x95 k.=10.9
23	4	10580795	Coil spring lock washer	A16
24	#	614306480	shim	d.=1mm
	#	614306490	shim	d.=2mm
	#	614306500	shim	d.=5mm
25	4	660207214	Lock nut	DIN 980 M16x1,5 k.=10
26	4	10707778	Screw	DIN 960 M18x1,5x190 k.=10.9
27	4	660631904	Washer	DIN 125 A19
28	#	614308780	shim	d.=1mm
	#	614308790	shim	d.=2mm
	#	614308800	shim	d.=5mm

Wheel suspension arms

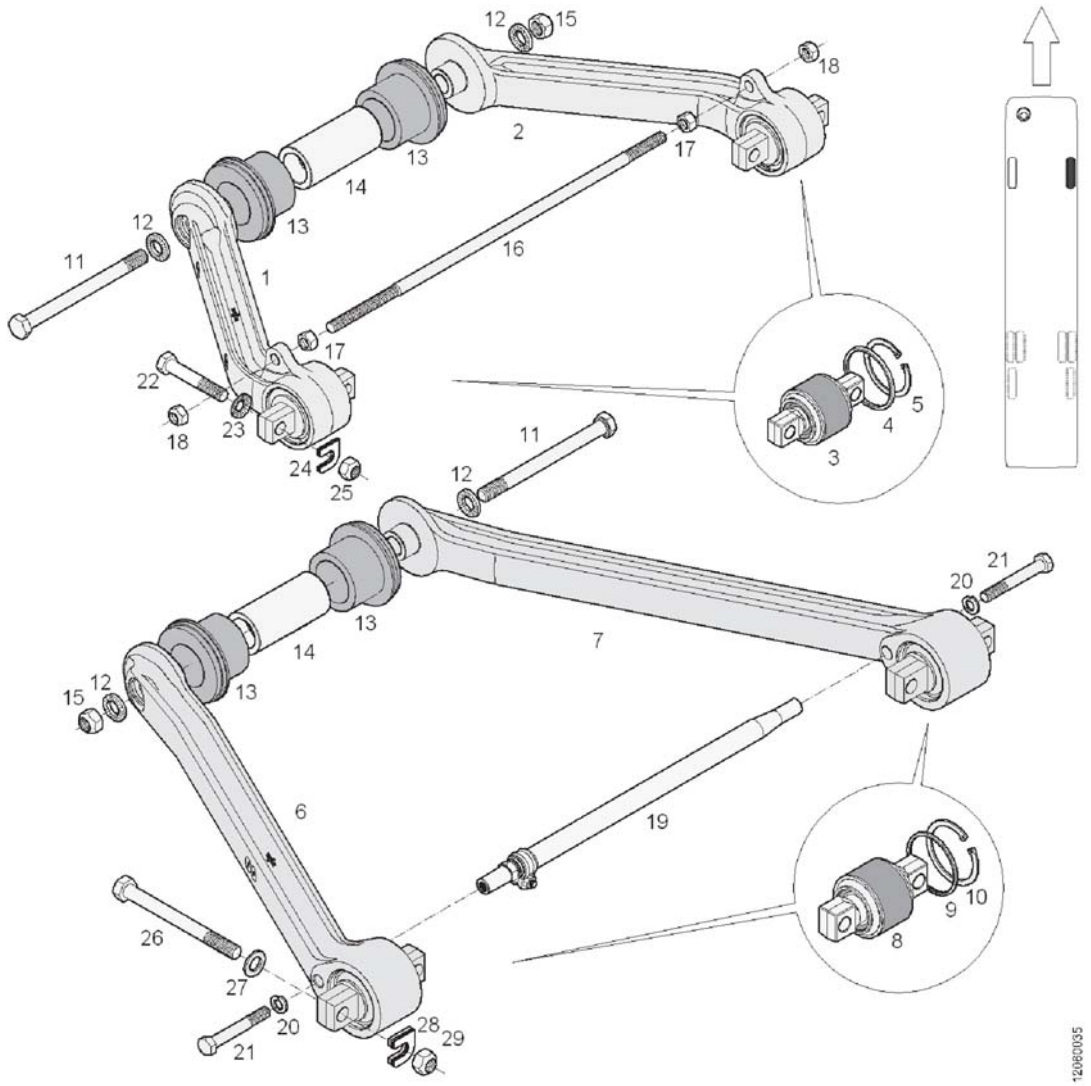

Pos.	Q.	Part n°	Description	Specification
	#	10929181	shim	d.=10mm
29	4	660207287	Lock nut	DIN 980 M18x1,5 k.=10

Hub

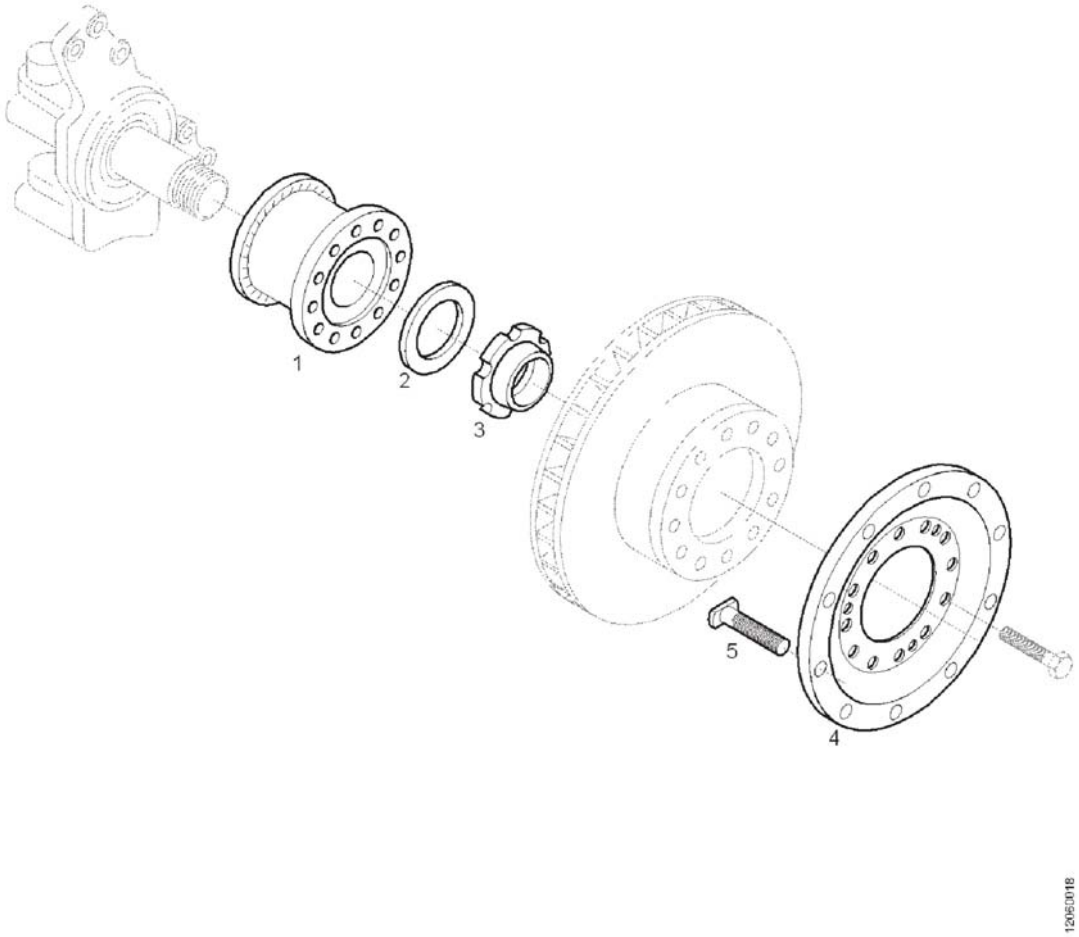

Pos.	Q.	Part n°	Description	Specification
1	1	N934200349	Hub-bearing unit	
2	1	N442150035	Thrust ring	
3	1	N906200086	Nut	M58x1,5
4	1	N443010177	Wheel flange	
5	10	N455010129	Screw	M22x1,5x65 k.=10.9

Stub axles

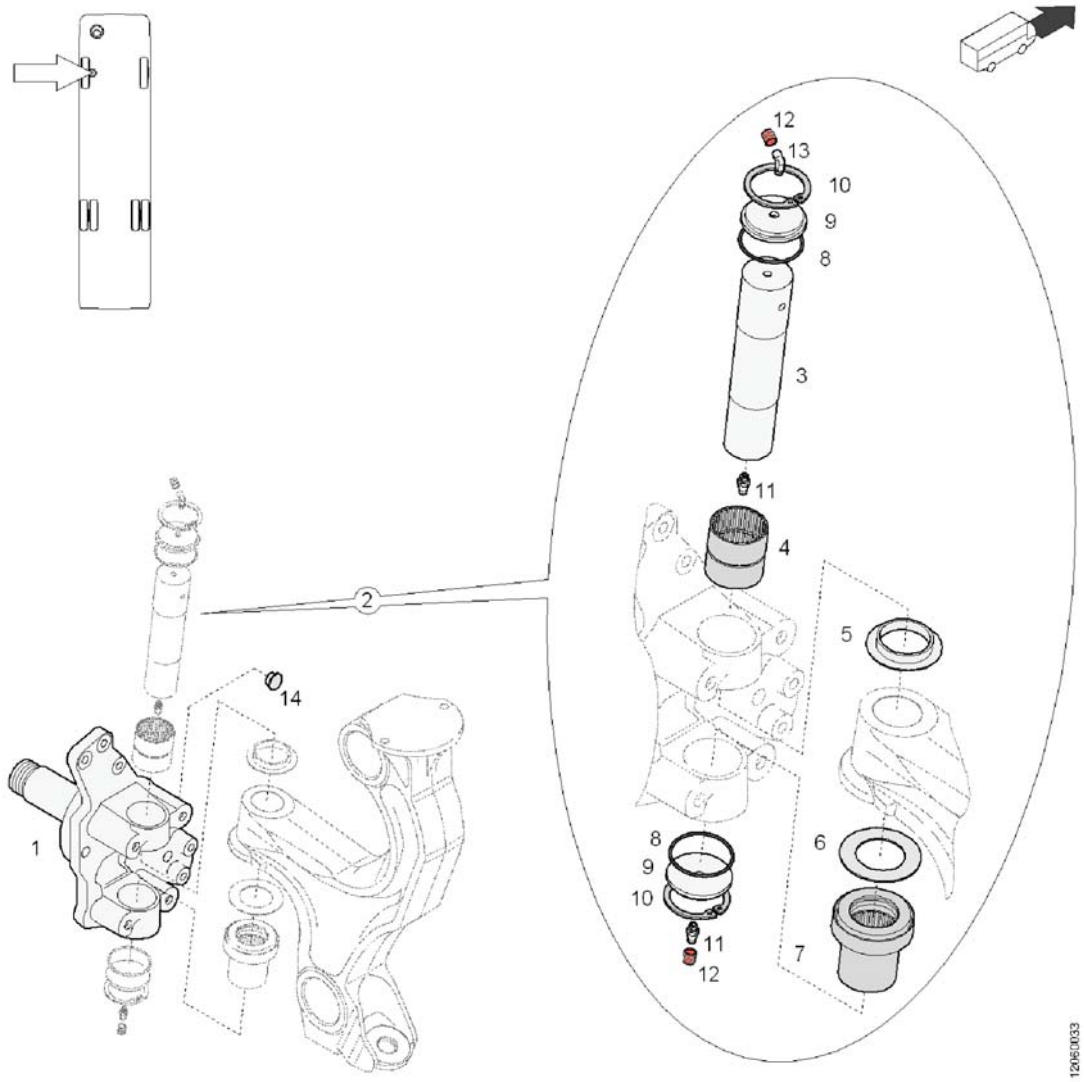

Pos.	Q.	Part n°	Description	Specification
1	1	N442016292	Stub axle	
2	1	N442056042	Repair kit swivel pin	
3	*1	N442050066	Swivel pin	
4	*1	L337190101	Needle bearing	53x60x54
5	*1	N965030524	Sealing washer	53x80x9,6
6	*#	N907140753	Spacer ring	d.=1,8
	*#	N907140754	Spacer ring	d.=1,9
	*#	N907140755	Spacer ring	d.=2,0
	*#	N907140756	Spacer ring	d.=2,1
	*#	N907140757	Spacer ring	d.=2,2
	*#	N907140758	Spacer ring	d.=2,3
	*#	N907140759	Spacer ring	d.=2,4
	*#	N907140760	Spacer ring	d.=2,5
	*#	N907140761	Spacer ring	d.=2,6
7	*1	N934040066	Needle bearing	
8	*2	L569390016	Sealing washer	62x3
9	*2	N442080009	Cover	
10	*2	L290200139	Circlip	68x2,5

Stub axles

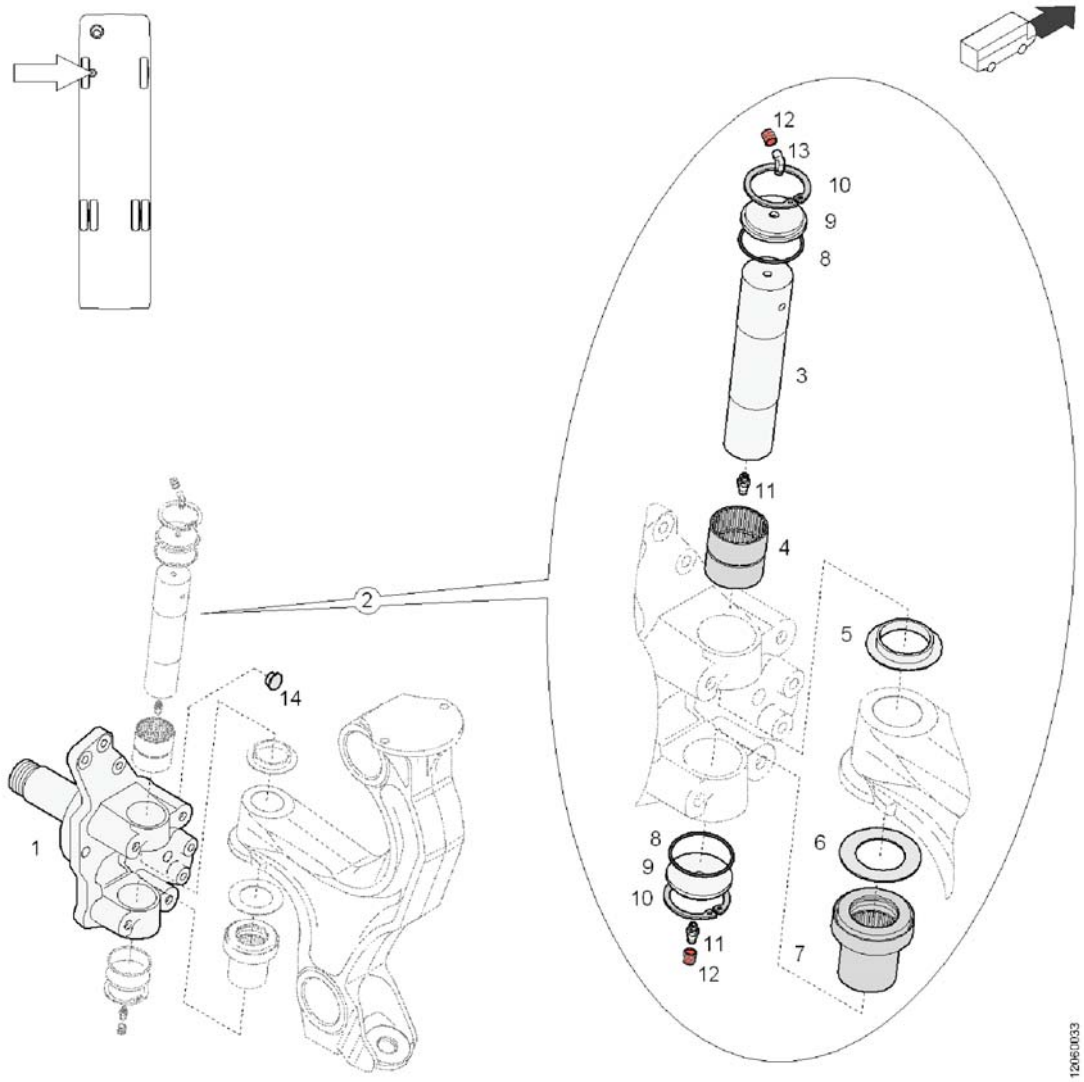

Pos.	Q.	Part n°	Description	Specification
11	*2	L380702102	Grease nipple	DIN 71412 AS8x1
12	*2	N960020191	Dust cap	
13	*1	L380702202	Grease nipple	DIN 71412 BS8x1
14	1	N960020368	Plug	

Stub axles

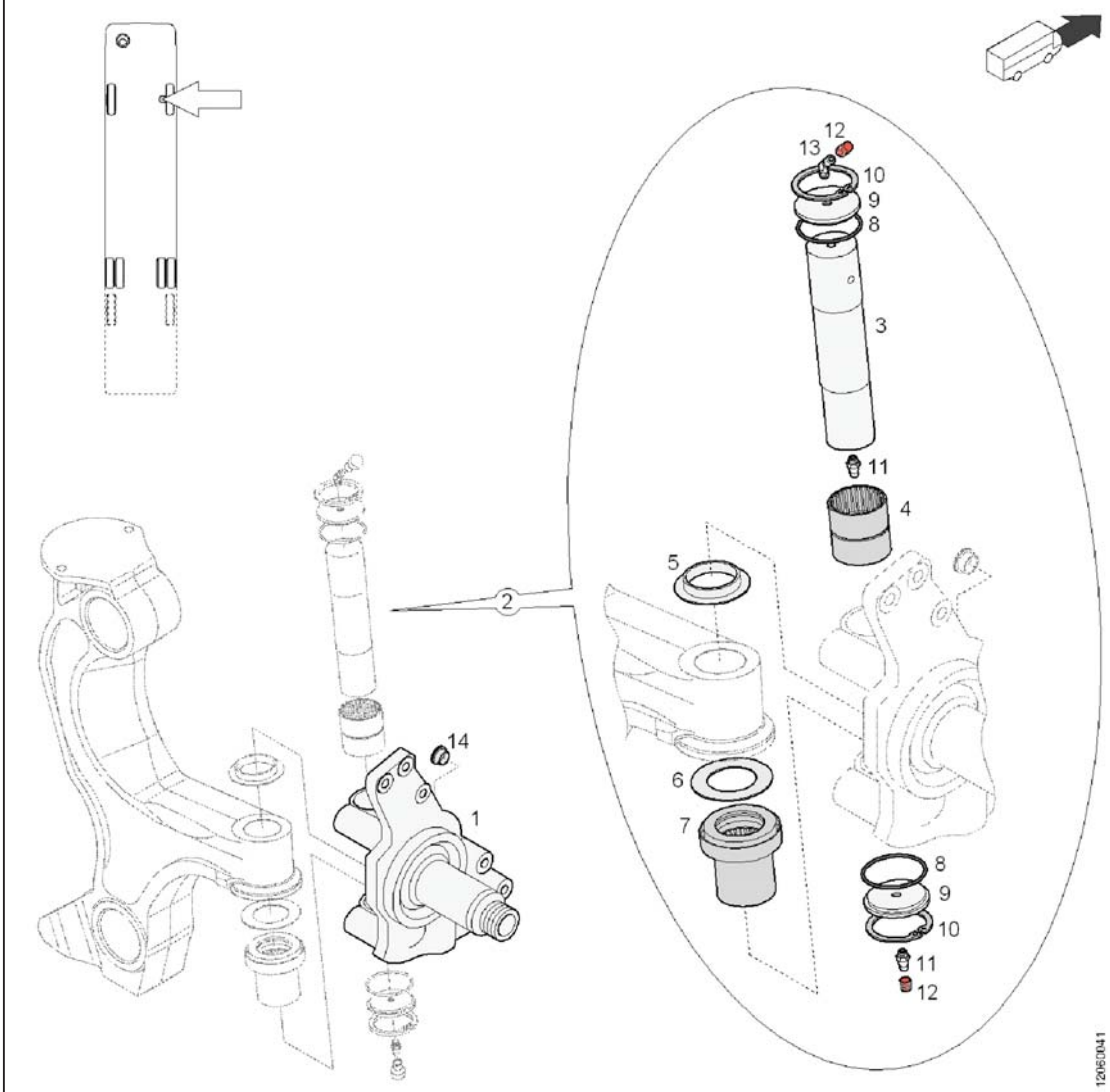

Pos.	Q.	Part n°	Description	Specification
1	1	N442016291	Stub axle	
2	1	N442056042	Repair kit swivel pin	
3	*1	N442050066	Swivel pin	
4	*1	L337190101	Needle bearing	53x60x54
5	*1	N965030524	Sealing washer	53x80x9,6
6	*#	N907140753	Spacer ring	d.=1,8
	*#	N907140754	Spacer ring	d.=1,9
	*#	N907140755	Spacer ring	d.=2,0
	*#	N907140756	Spacer ring	d.=2,1
	*#	N907140757	Spacer ring	d.=2,2
	*#	N907140758	Spacer ring	d.=2,3
	*#	N907140759	Spacer ring	d.=2,4
	*#	N907140760	Spacer ring	d.=2,5
	*#	N907140761	Spacer ring	d.=2,6
7	*1	N934040066	Needle bearing	
8	*2	L569390016	Sealing washer	62x3
9	*2	N442080009	Cover	
10	*2	L290200139	Circlip	68x2,5

Stub axles

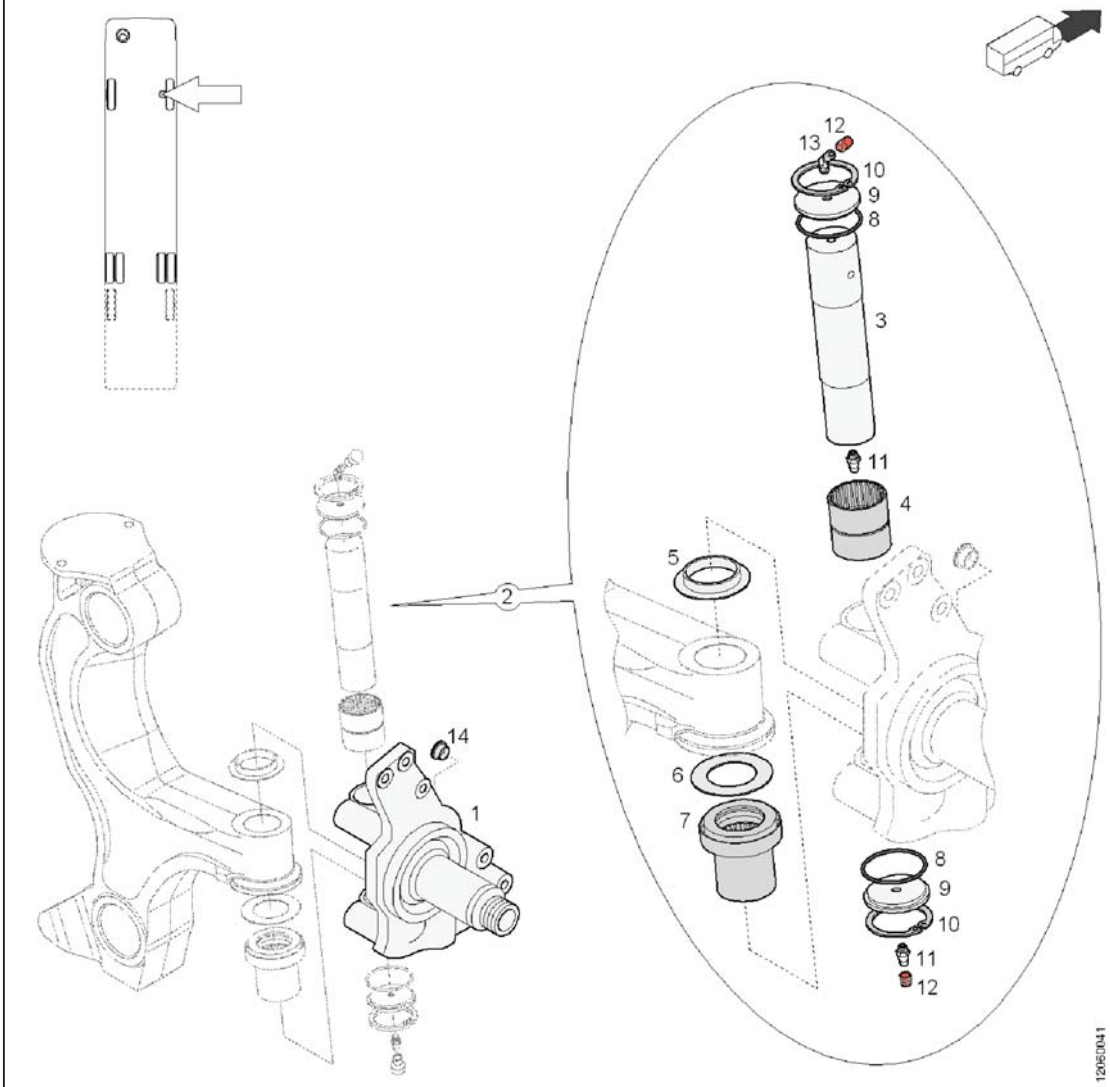

Pos.	Q.	Part n°	Description	Specification
11	*2	L380702102	Grease nipple	DIN 71412 AS8x1
12	*2	N960020191	Dust cap	
13	*1	L380702202	Grease nipple	DIN 71412 BS8x1
14	2	N960020368	Plug	

Track rods

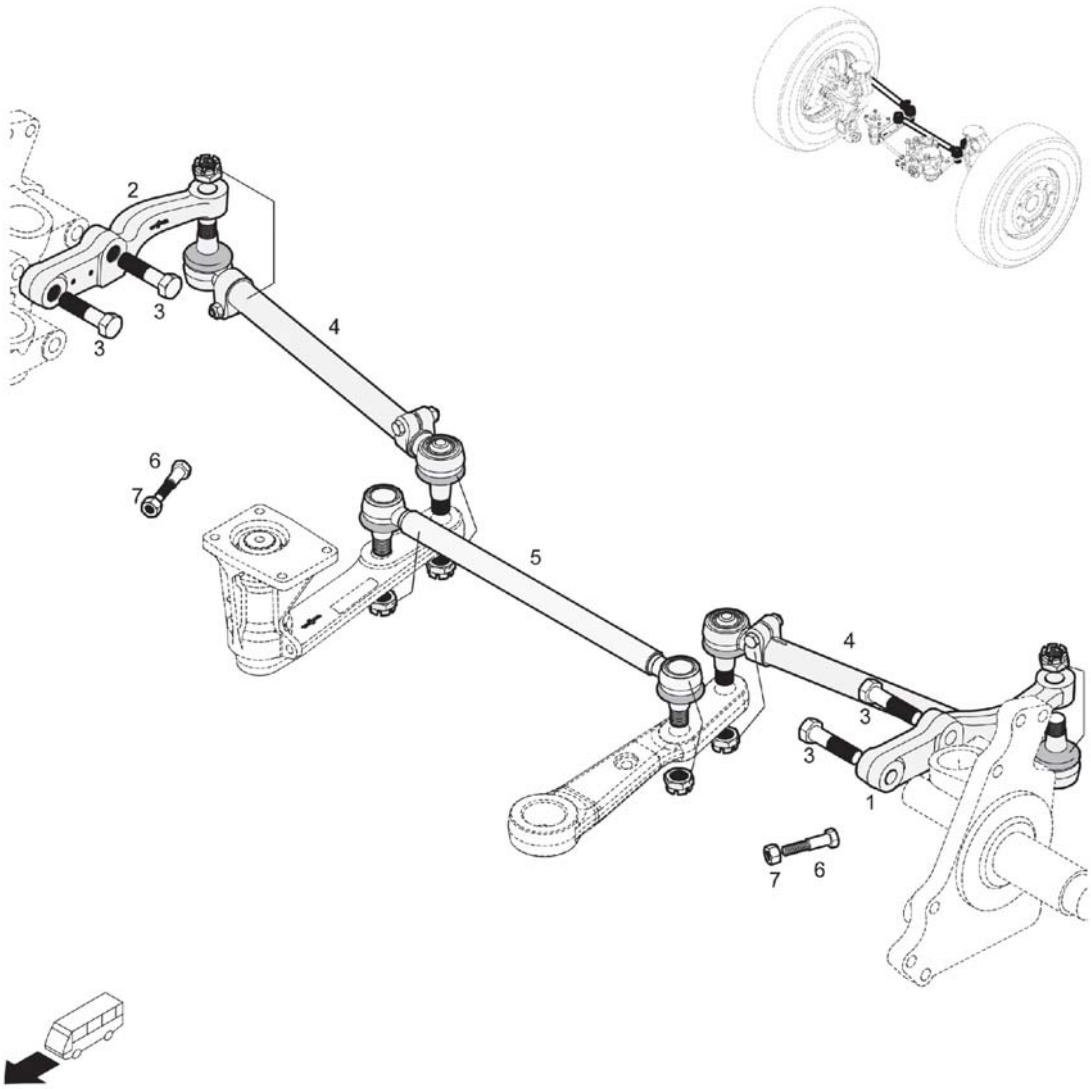

Pos.	Q.	Part n°	Description	Specification
1	1	10736748	Track rod arm	L-13
2	1	10736747	Track rod arm	R-13
3	4	10517129	Screw	DIN 960 M22x1,5x85 k.=10.9
4	2	10895617	Track rod	
5	1	10651380	Track rod	
6	2	660251058	Screw	DIN 960 M16x1,50x70 k.=8.8
7	2	660203604	Nut	DIN 934 M16x1,50 k.=8

Track rod: parts

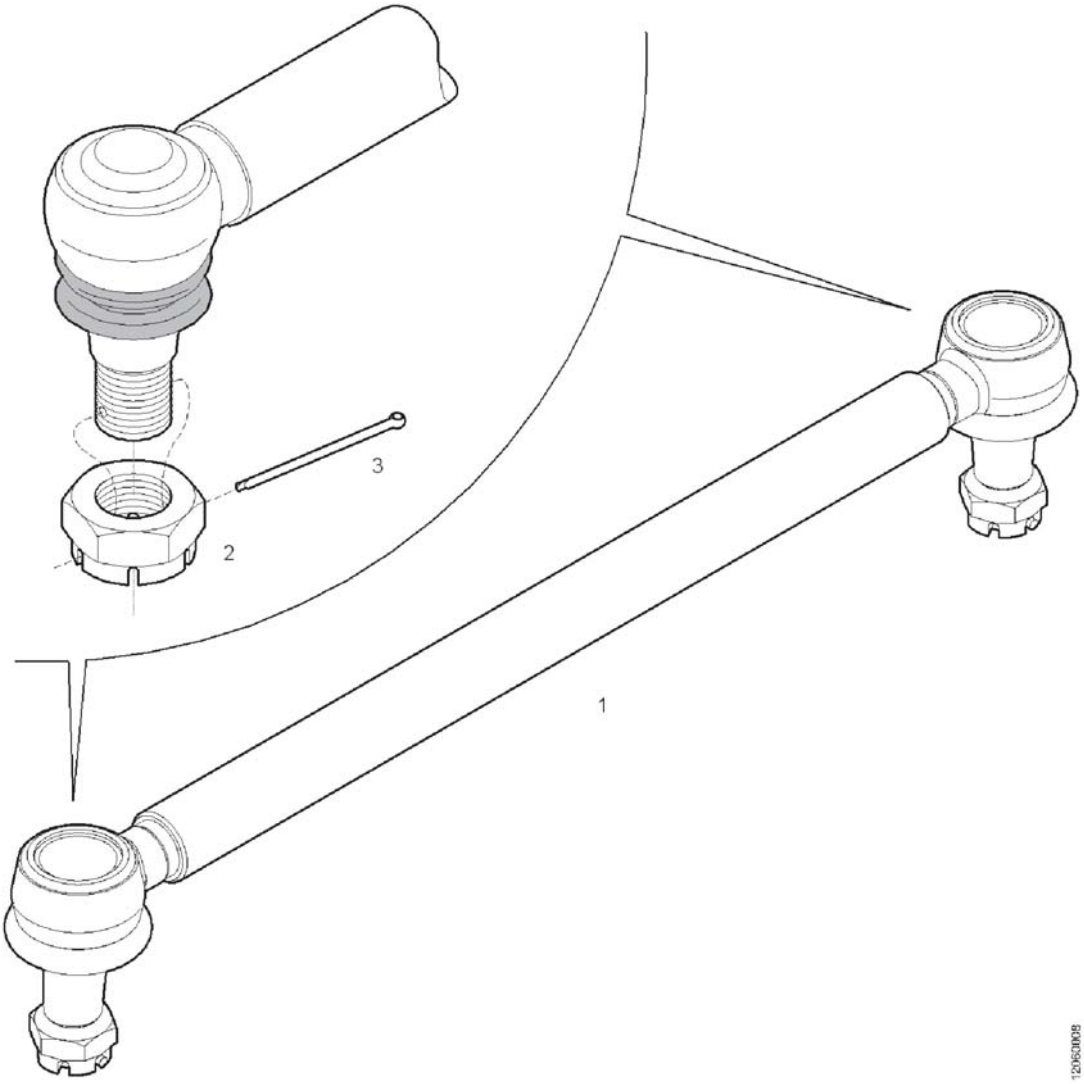

Pos.	Q.	Part n°	Description	Specification
1	1	10651380	Track rod	
2	*2	660208620	Slotted nut	DIN 937 M24x1,5 k.=8
3	*2	660619102	Split pin	DIN 94 5x40

Track rod: parts

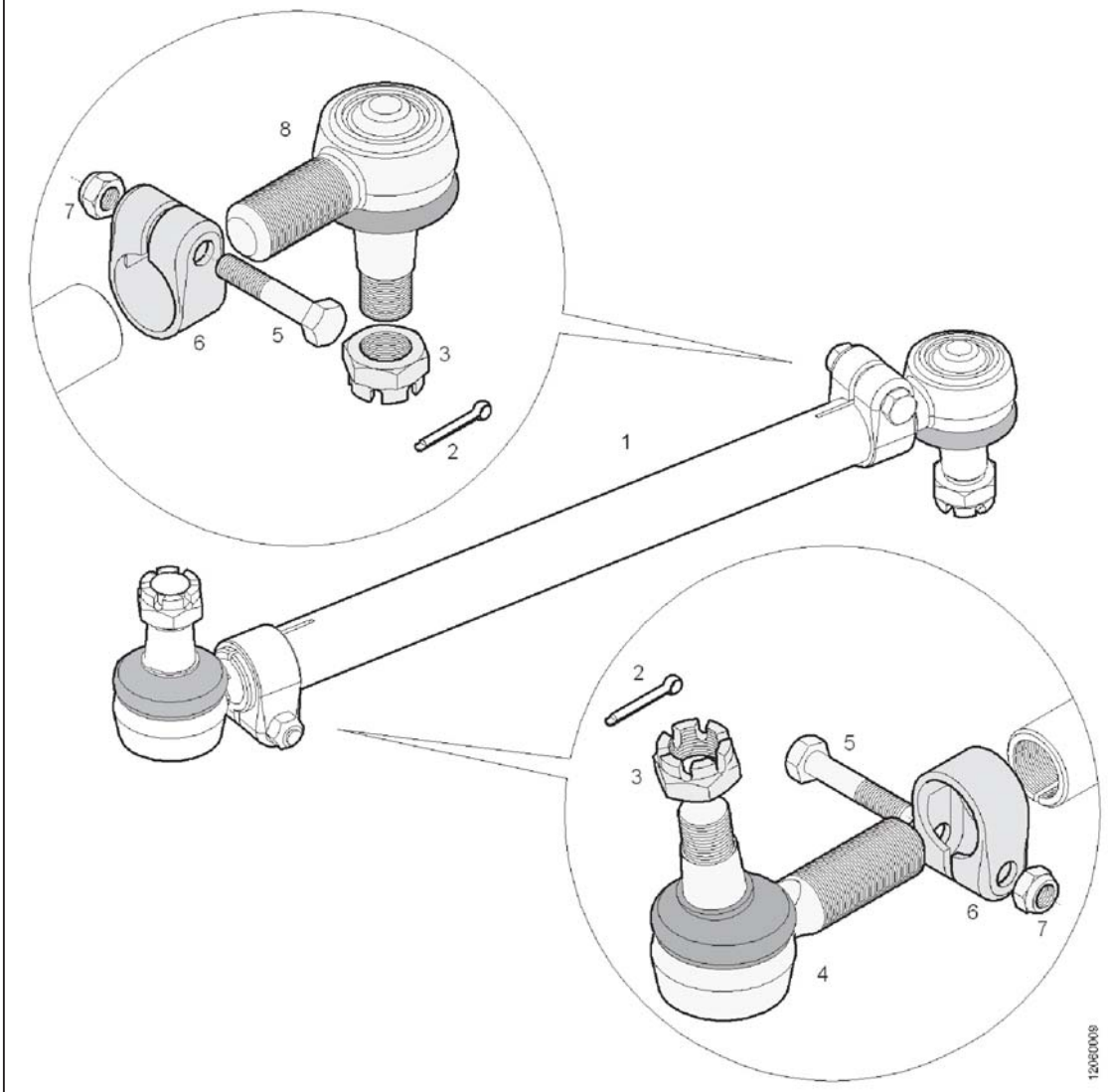

Pos.	Q.	Part n°	Description	Specification
1	1	10895617	Track rod	
2	*2	10543971	Split pin	DIN 94 5x40 MAT:IN
3	*2	660208620	Slotted nut	DIN 937 M24x1,5 k.=8
4	*1	10841028	Ball joint	M30x1,5 SDRD Re
5	*2	660251044	Screw	DIN 960 M12x1,5x62 k.=8.8
6	*2	10894100	Clamp	Ø40
7	*4	660207413	Lock nut	DIN 980 M12x1,5 k.=8
8	*1	10841030	Ball joint	M30x1,5 SDRD Li

Stub axle carriers

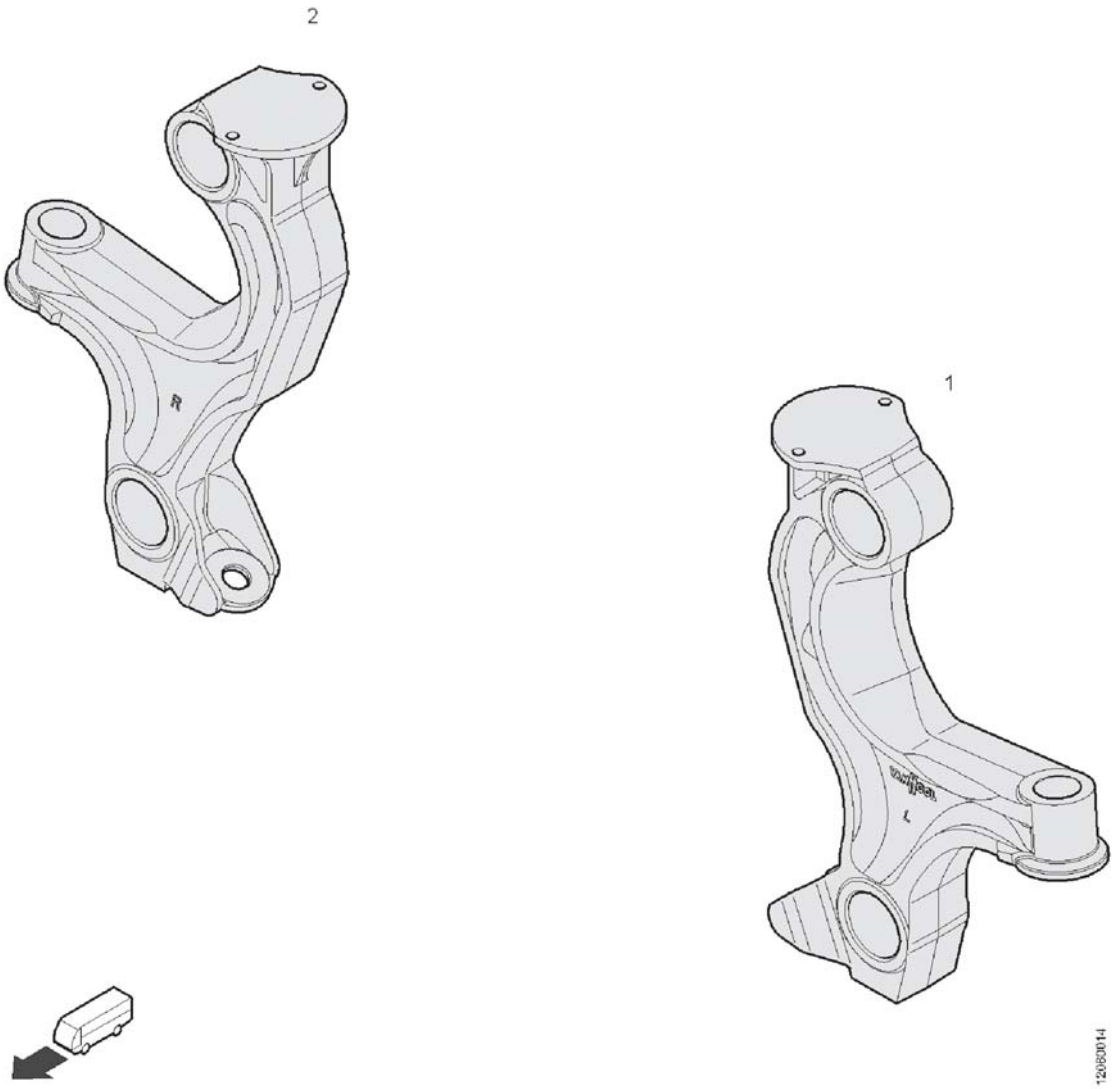

Pos.	Q.	Part n°	Description	Specification
1	1	10737761	Stub axle carrier	Li
2	1	10737763	Stub axle carrier	Re

Hub (G171)

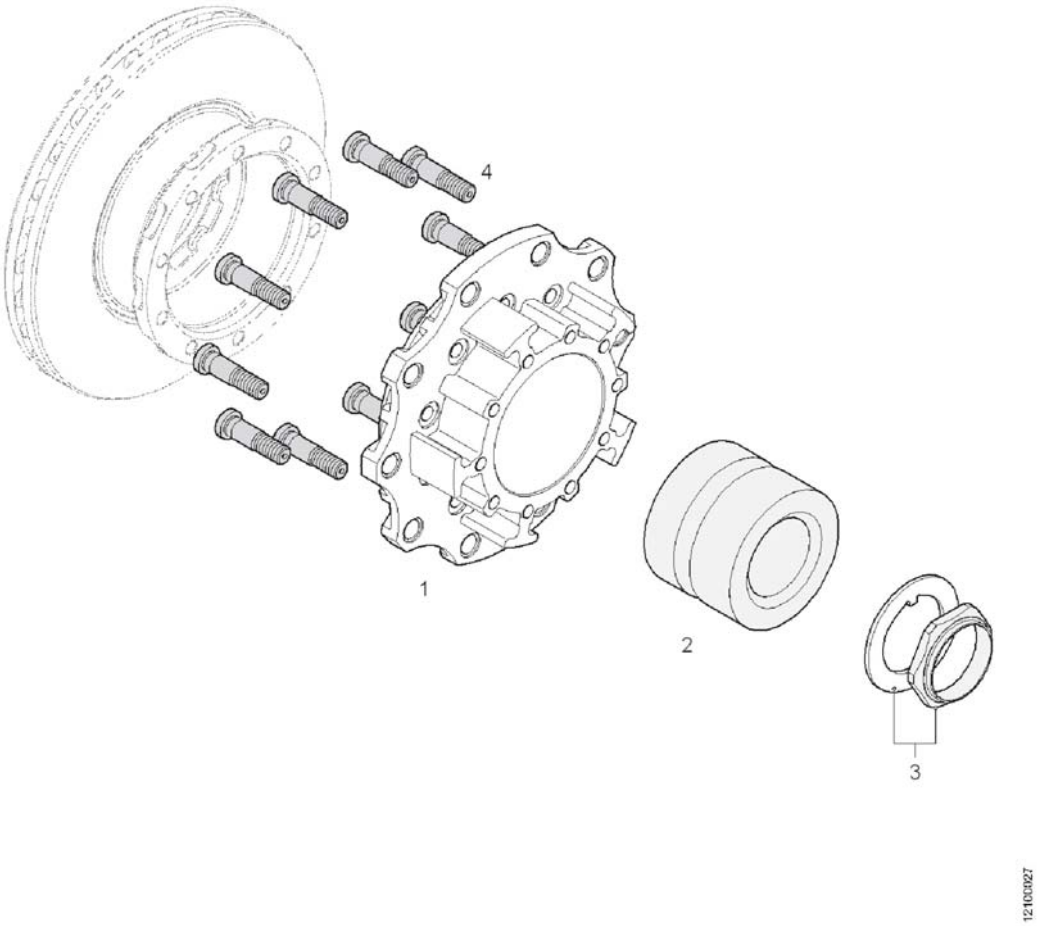

Pos.	Q.	Part n°	Description	Specification
1	2	11047677	Hub	
2	2	10875658	Bearing	"Superseal"
3	2	10963147	Kit: nut + washer	M86
4	20	11251731	Screw	M22x1,5

Wheel suspension arms

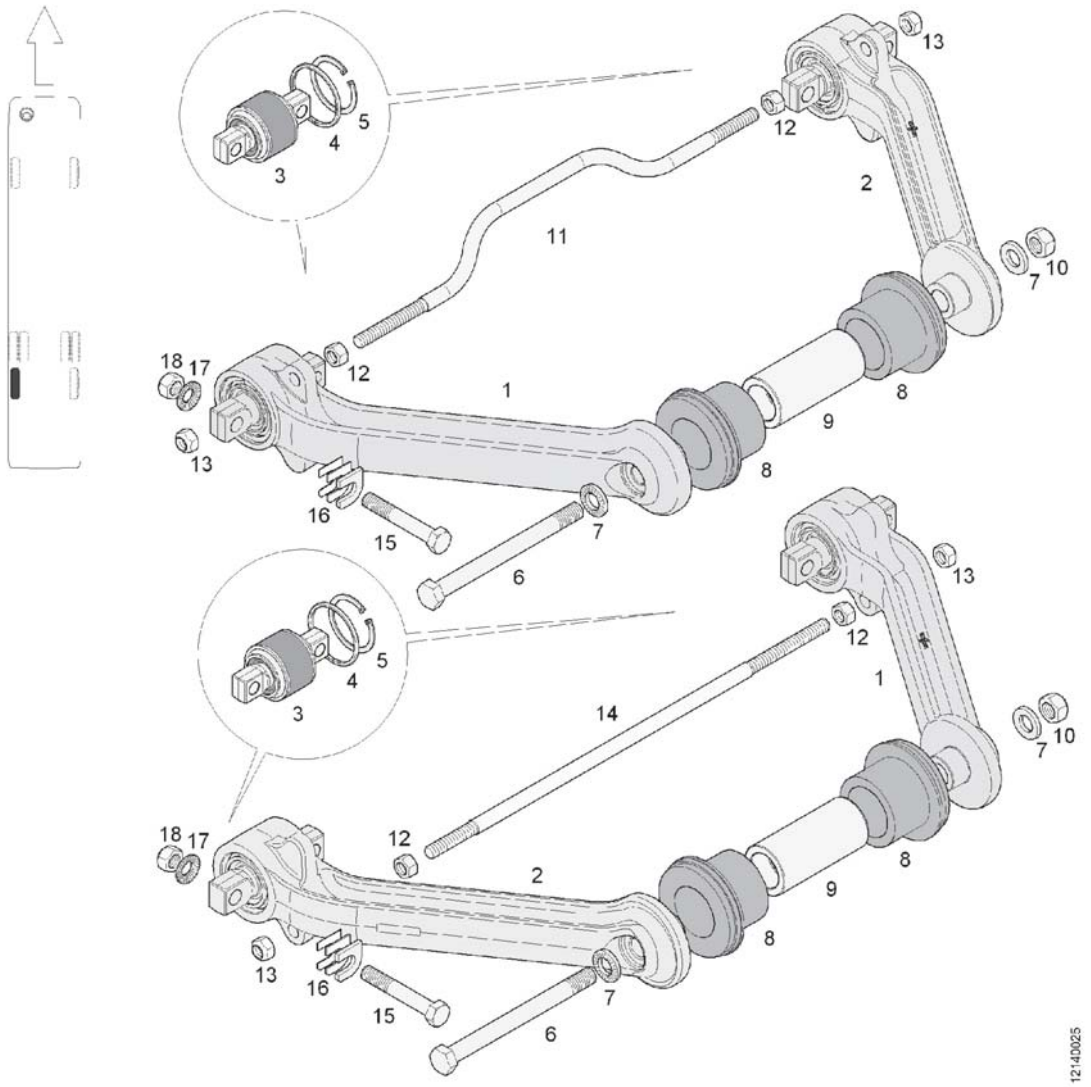

Pos.	Q.	Part n°	Description	Specification
1	2	10650416	Support arm, complete	Li
2	2	10650417	Support arm, complete	Li
		-		
3	*1	634301790	Articulation	
4	*1	634301530	Ring	Ø75xØ67x4
5	*1	660635534	Circlip	DIN 472 A75x2,5
		-		
6	2	10647991	Screw	M18x1,5x210 k.=10.9
7	4	660632502	Washer	M18 Ø19,5xØ36x4,8
8	4	624317270	Bush	
9	2	10647957	Shaft	
10	2	660207287	Lock nut	DIN 980 M18x1,5 k.=10
11	1	614310980	Rod	
12	4	660203501	Nut	DIN 934 M14x2 k.=8
13	4	660207206	Lock nut	DIN 980 M14x2 k.=8
14	1	614308010	Rod	
		-		
15	8	660251271	Screw	DIN 960 M16x1,50x100 k.=10.9

Wheel suspension arms

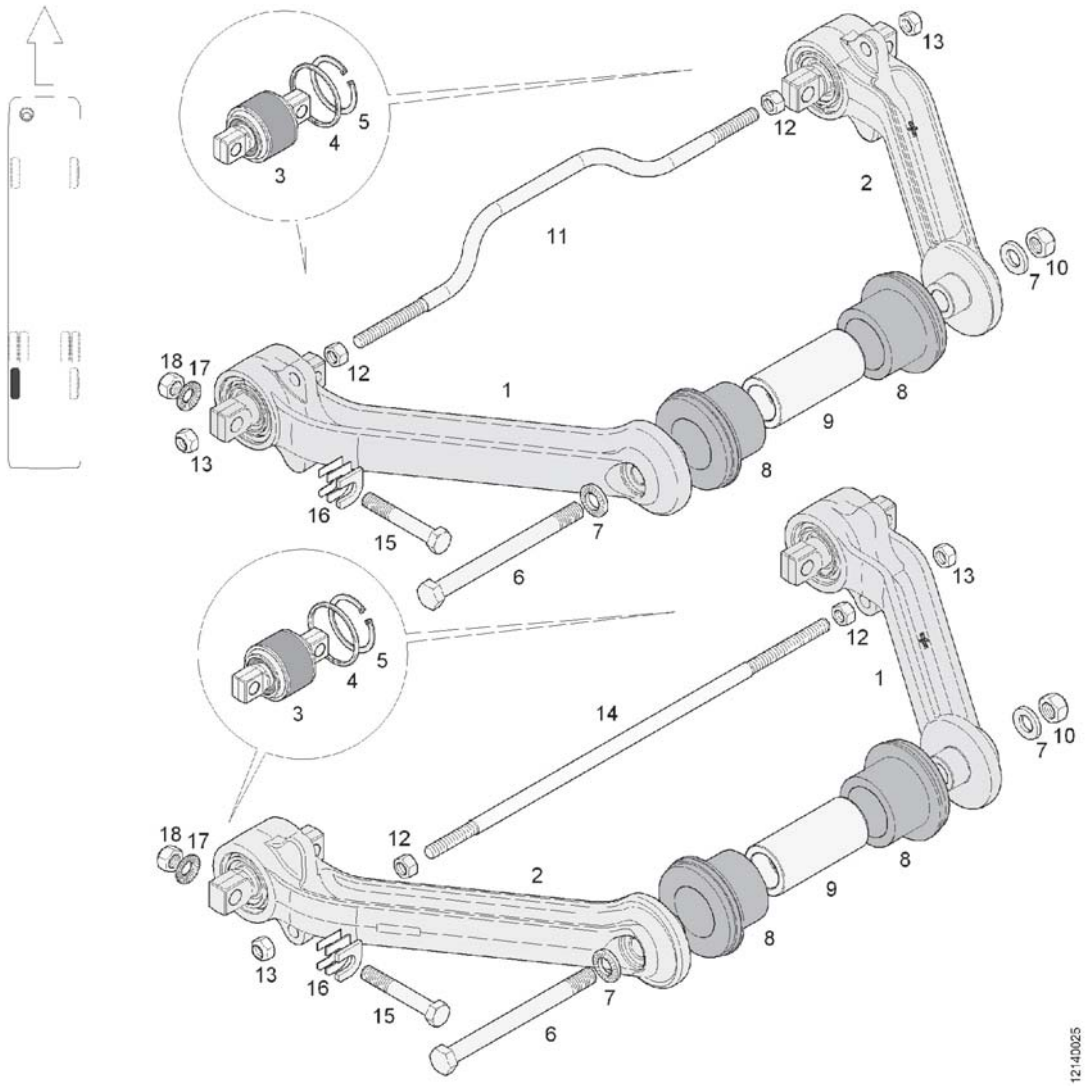

Pos.	Q.	Part n°	Description	Specification
16	#	614306480	shim	d.=1mm
	#	614306490	shim	d.=2mm
	#	614306500	shim	d.=5mm
17	8	10580795	Coil spring lock washer	A16
18	8	660207214	Lock nut	DIN 980 M16x1,5 k.=10

Wheel suspension arms

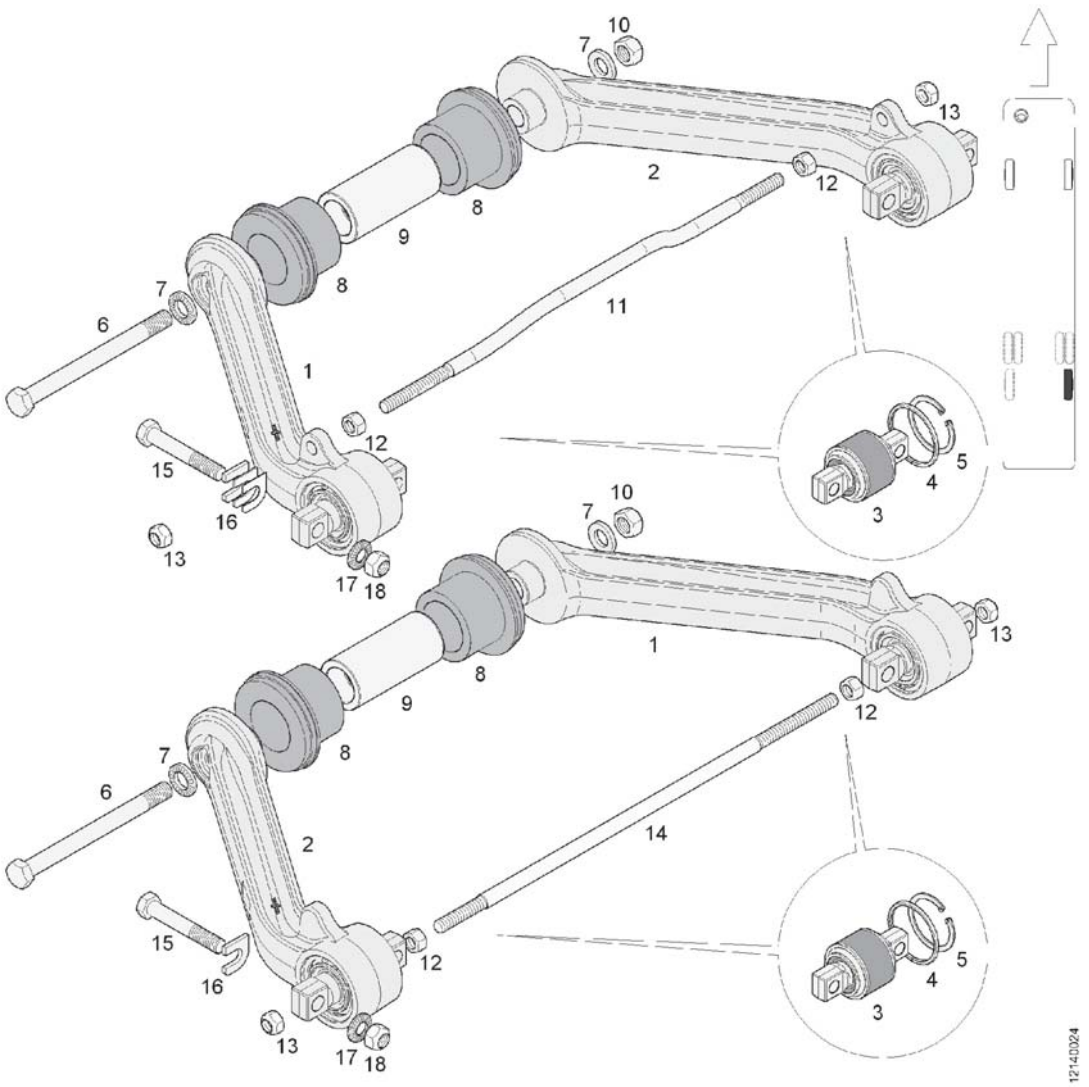

Pos.	Q.	Part n°	Description	Specification
1	2	10650418	Support arm + accessories	Re
2	2	10650419	Support arm, complete	Re
		-		
3	*1	634301790	Articulation	
4	*1	634301530	Ring	Ø75xØ67x4
5	*1	660635534	Circlip	DIN 472 A75x2,5
		-		
6	2	10647991	Screw	M18x1,5x210 k.=10.9
7	4	660632502	Washer	M18 Ø19,5xØ36x4,8
8	4	624317270	Bush	
9	2	10647957	Shaft	
10	2	660207287	Lock nut	DIN 980 M18x1,5 k.=10
11	1	614310980	Rod	
12	4	660203501	Nut	DIN 934 M14x2 k.=8
13	4	660207206	Lock nut	DIN 980 M14x2 k.=8
14	1	614308010	Rod	
		-		
15	8	660251271	Screw	DIN 960 M16x1,50x100 k.=10.9

Wheel suspension arms

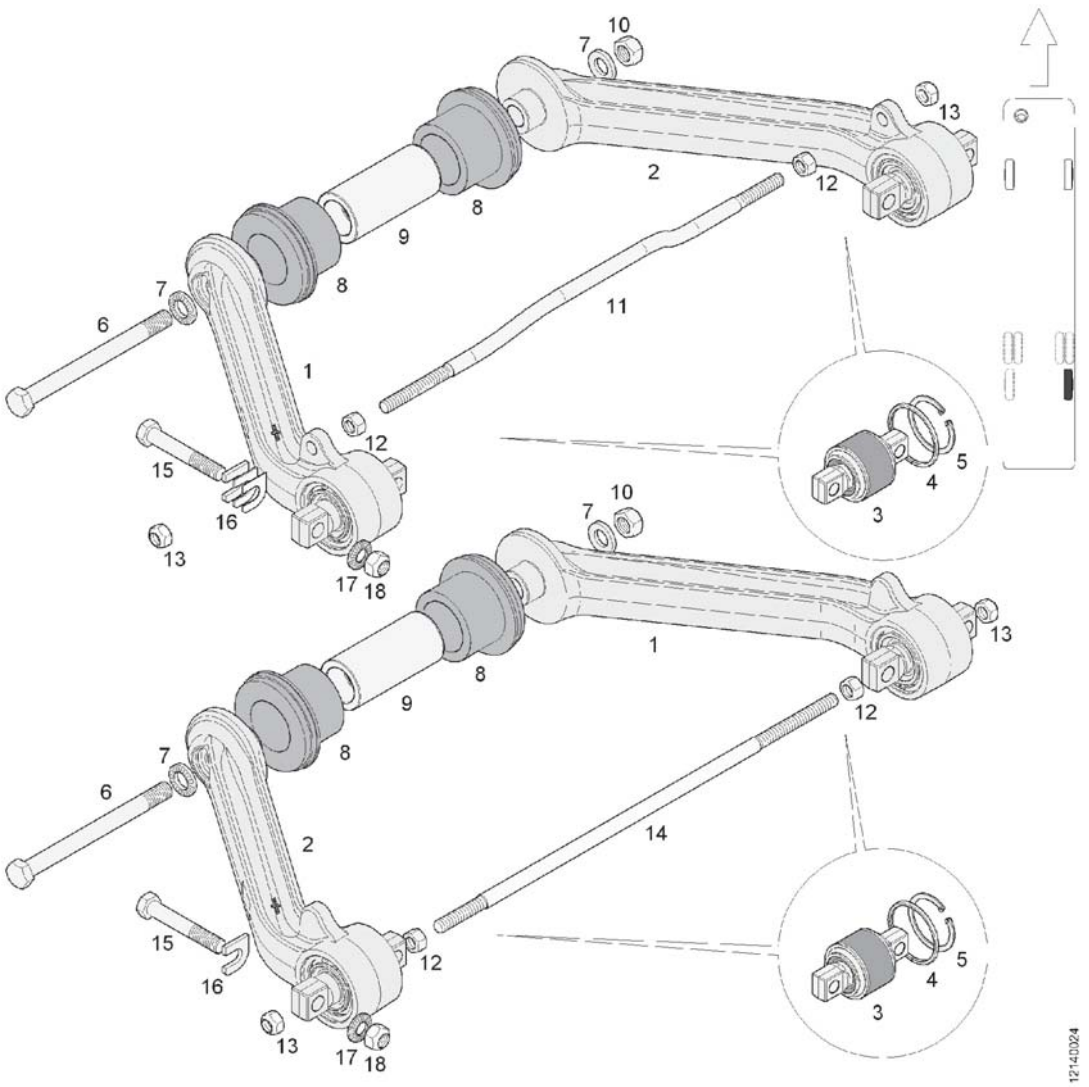

Pos.	Q.	Part n°	Description	Specification
16	#	614306480	shim	d.=1mm
	#	614306490	shim	d.=2mm
	#	614306500	shim	d.=5mm
17	8	10580795	Coil spring lock washer	A16
18	8	660207214	Lock nut	DIN 980 M16x1,5 k.=10

Hub

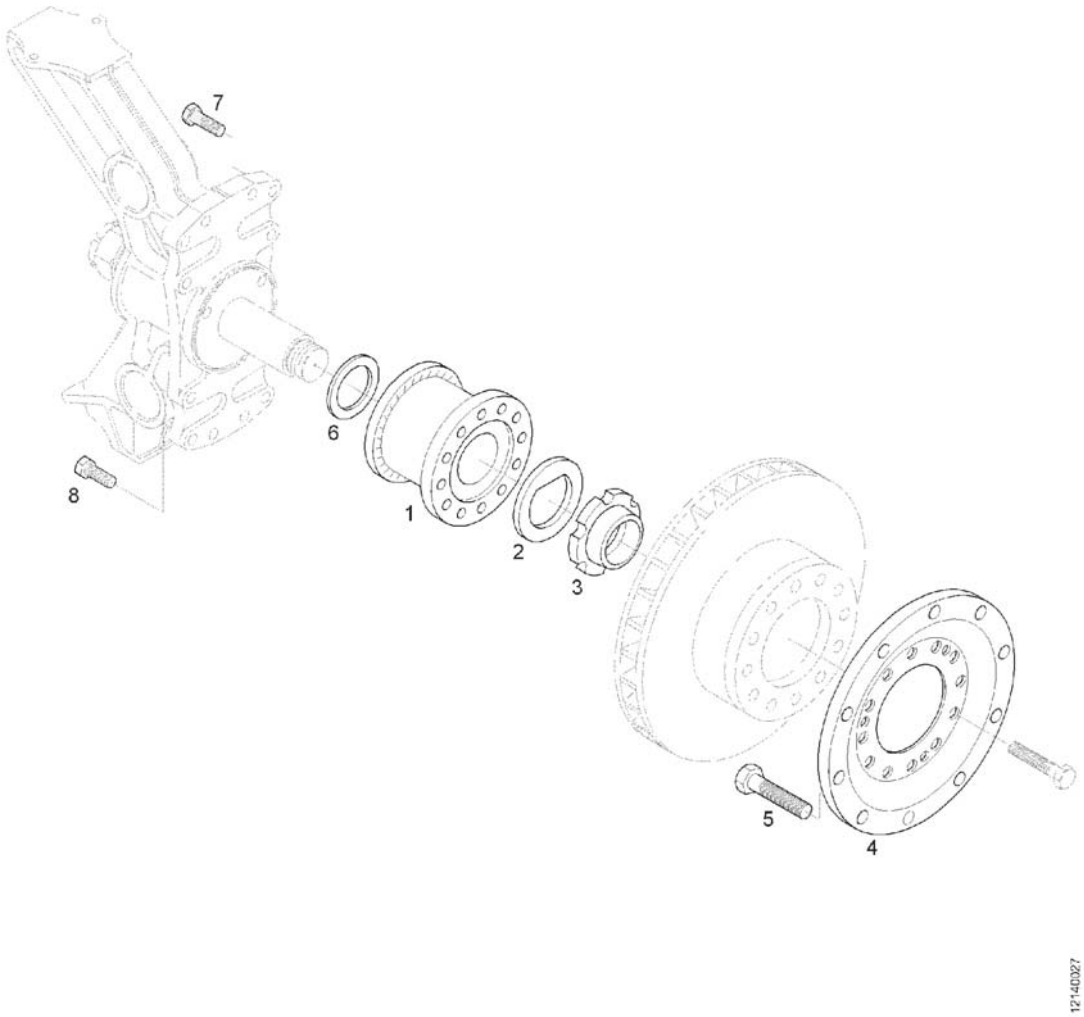

Pos.	Q.	Part n°	Description	Specification
1	2	N934200349	Hub-bearing unit	
2	2	N442150035	Thrust ring	
3	2	N906200086	Nut	M58x1,5
4	2	N443010177	Wheel flange	
5	20	N455010129	Screw	M22x1,5x65 k.=10.9
6	2	10647405	Ring	Ø98xØ70x6
7	10	L019023413	Screw	M18x1,5x60 k.=10.9
8	2	660219772	Screw	DIN 961 M18x1,5x50 k=10.9

Hub carrier

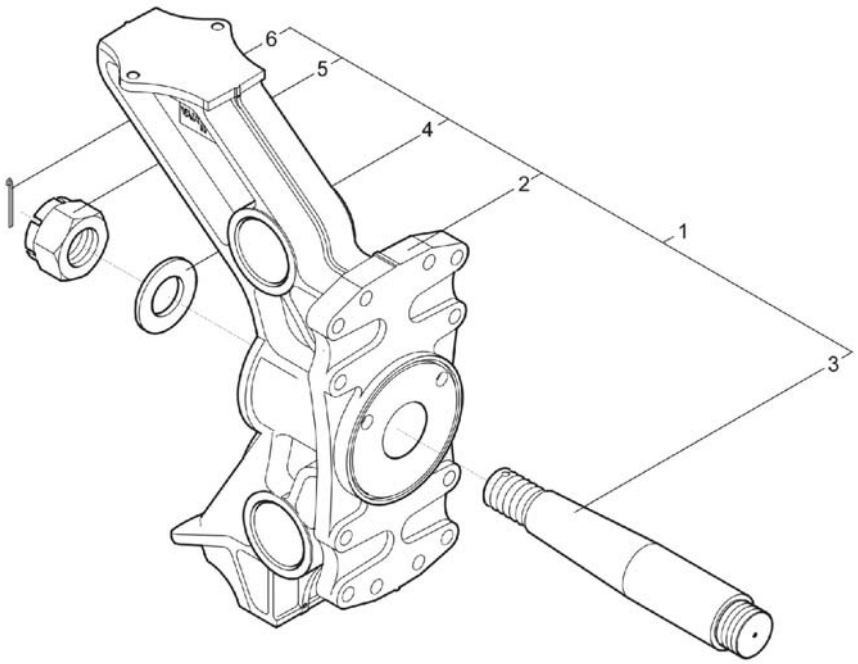

Pos.	Q.	Part n°	Description	Specification
1	2	10645764	Hub carrier	
2	*1	10645543	Hub carrier	
3	*1	10645766	Shaft	
4	*1	624316330	Washer	
5	*1	660208720	Slotted nut	DIN 935 M48x1,5
6	*1	660619951	Split pin	DIN 94 8x80

Compressed air system: air dryer

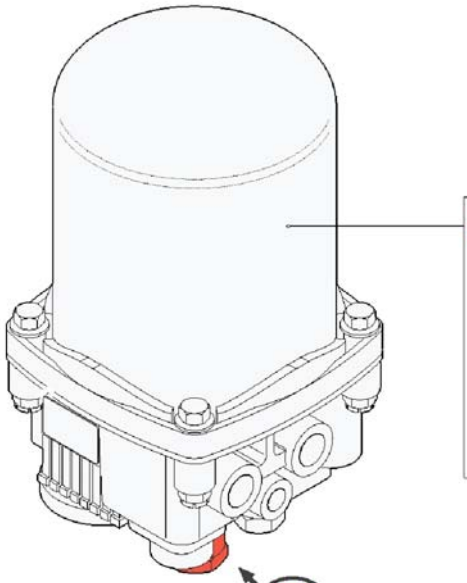

⚠	1	air dryer with turbo protection valve when a single air compressor is used for the compressed air feed system
	2	air dryer without turbo protection valve when a double air compressor is used for the compressed air feed system

location of turbo protection valve

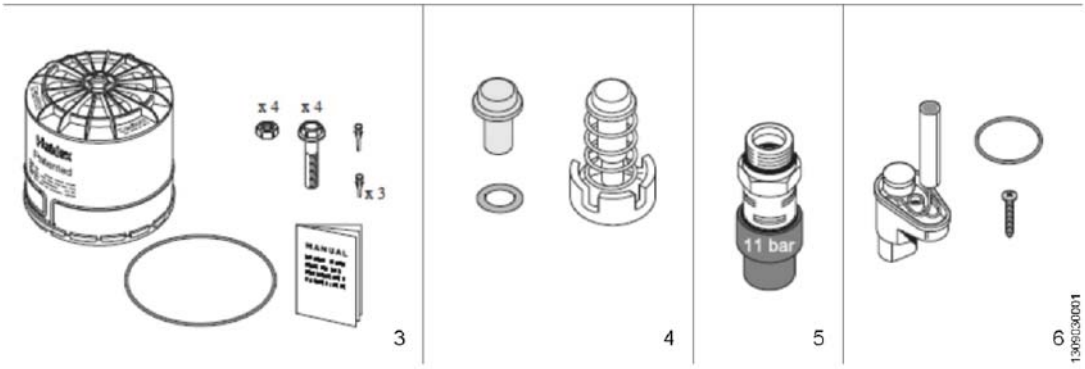

Pos.	Q.	Part n°	Description	Specification
1	1	10769882	Air dryer	with turbo protection valve
2	1	10838766	Air dryer	without turbo protection valve
3	#	10898619	Air dryer cartridge-maintenance kit	
4	#	10898623	Non return flap + accessories	
5	#	10898622	Safety valve	
6	#	10898626	Heating element	

Tanks: aluminium (MAT:ALU)

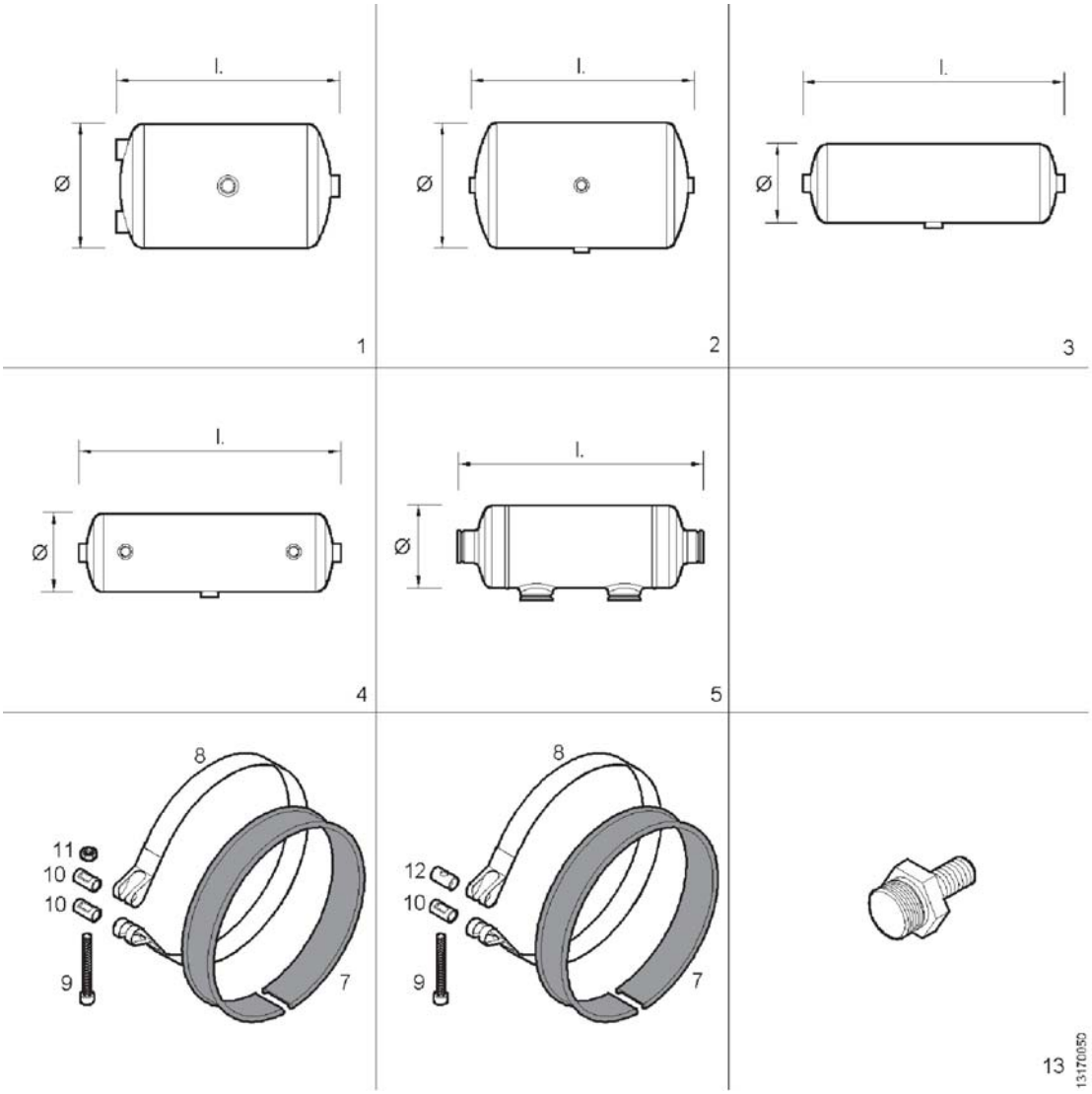

Pos.	Q.	Part n°	Description	Specification
1	#	637211100	Air tank	10l - Ø206mm l.=370mm
		637213290	Air tank	20l - Ø206mm l.=697mm
		637213310	Air tank	30l - Ø206mm l.=1000mm
		637214220	Air tank	40l - Ø206 l.=1353mm
		10567068	Air tank	20l - Ø246mm l.=516mm
		637213280	Air tank	20l - Ø246mm l.=510mm
		637213300	Air tank	30l - Ø246 l.=730mm
		637213320	Air tank	40l - Ø246 l.=945mm
		637211750	Air tank	40L Ø276 l.=766mm
		10841996	Air tank	30l - Ø296mm l.=521mm
		10500441	Air tank	60l - Ø310mm l.=907mm
		637212650	Air tank	80l - Ø308mm l.=1175mm
		637210000	Air tank	80l - Ø396mm l.=748mm
		-		
2	#	10681771	Air tank	10l - Ø154mm l.=646mm
		10842111	Air tank	15l - Ø206mm l.=539mm
		10567068	Air tank	20l - Ø246mm l.=516mm
		10591738	Air tank	30l - Ø206mm l.=1006mm

Tanks: aluminium (MAT:ALU)

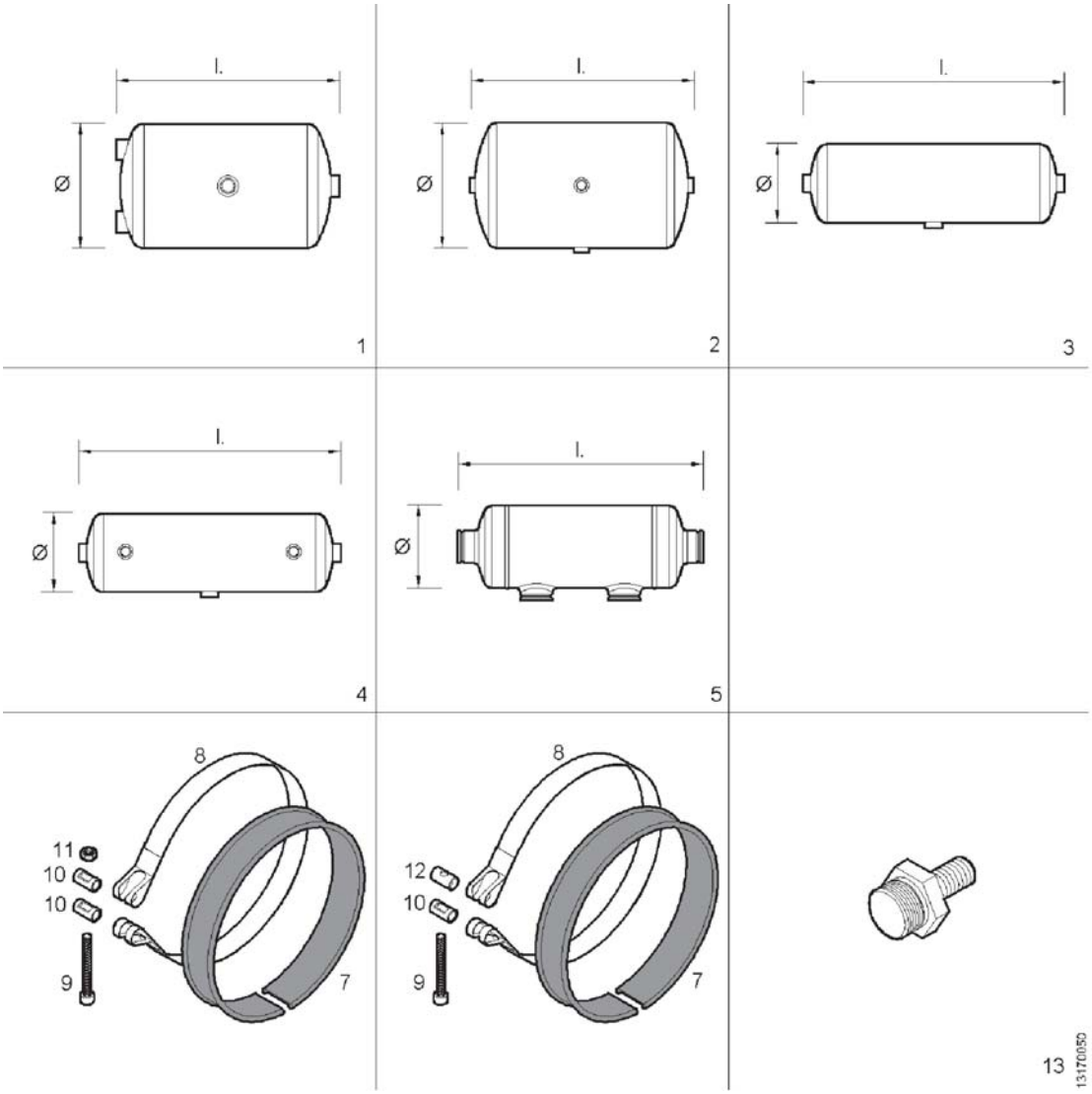

Pos.	Q.	Part n°	Description	Specification
		10591747	Air tank	30l - Ø296mm l.=529mm
		10900175	Air tank	40l - Ø296mm l.=674mm
		-		
3	#	10971074	Air tank	3,25l - Ø100mm l.=497mm
		637214150	Air tank	5l - Ø154mm l.=358mm
		10574858	Air tank	7,8l - Ø154mm l.=514mm
		-		
4	#	10585203	Air tank	22l - Ø154mm l.=1335mm
		-		
5	#	11317951	Air tank	1,1l - Ø89mm l.=258mm
		-		
7	#m	660057150	Rubber section	b.=50mm
		-		
8	#	10585737	Clamping band	Ø150mm MAT:IN
		10585738	Clamping band	Ø180mm MAT:IN
		10625164	Clamping band	Ø206mm MAT:IN
		10625167	Clamping band	Ø246mm MAT:IN
		10585739	Clamping band	Ø250mm MAT:IN

Tanks: aluminium (MAT:ALU)

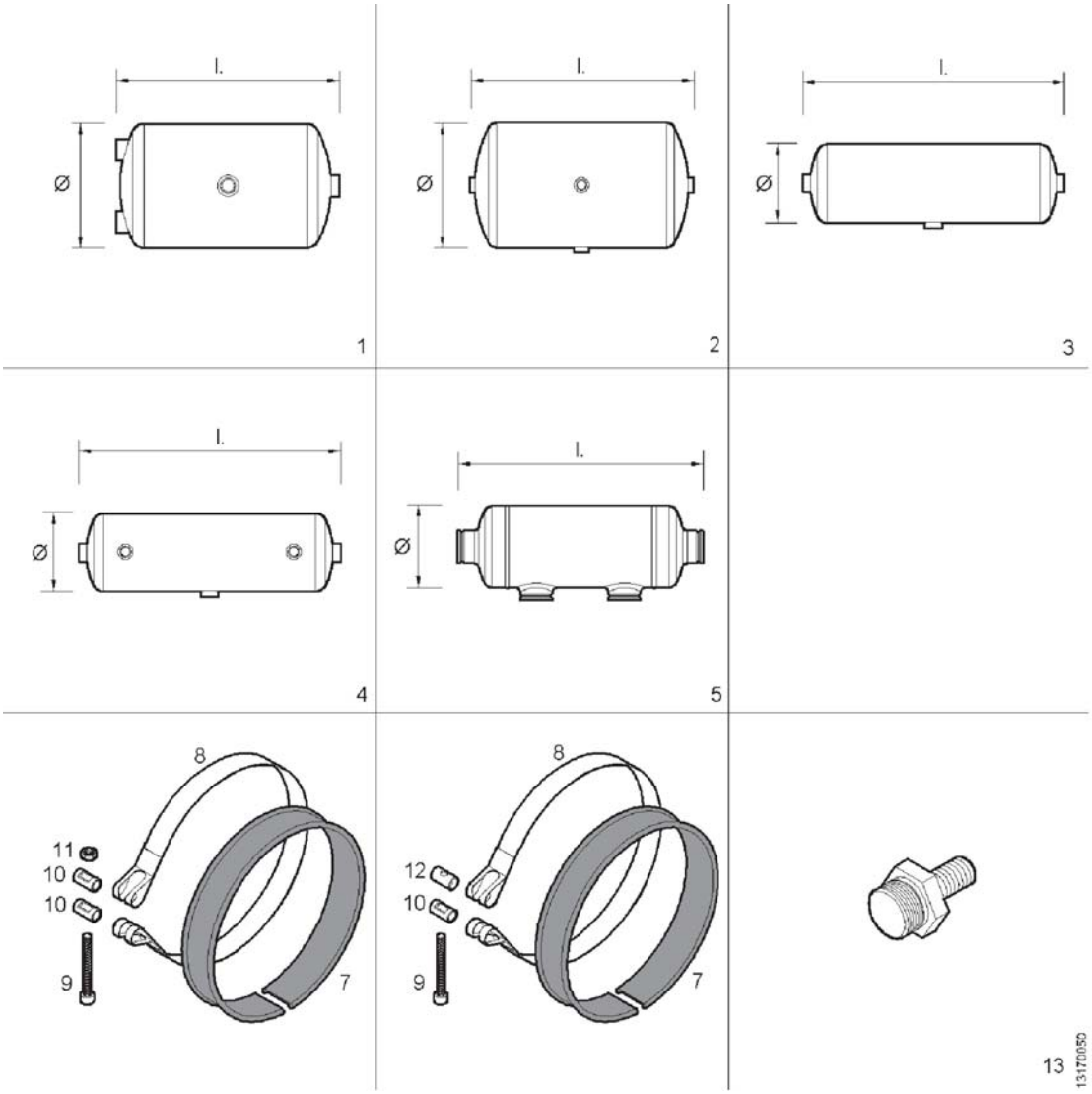

Pos.	Q.	Part n°	Description	Specification
		10635486	Clamping band	Ø276mm MAT:IN
		10625169	Clamping band	Ø296mm MAT:IN
		-		
9	#	660293901	Screw	DIN 912 M10x1,5x85 k.=8.8
10	#	10534772	Bush	Ø17xØ12,75x30
11	#	660203301	Nut	DIN 934 M10x1,5 k.=8
12	#	10534771	Bush	Ø17x30-M10
13	#	617300190	Fastener	M22x1,5-M12x1,75

Tanks: steel (MAT:ST)

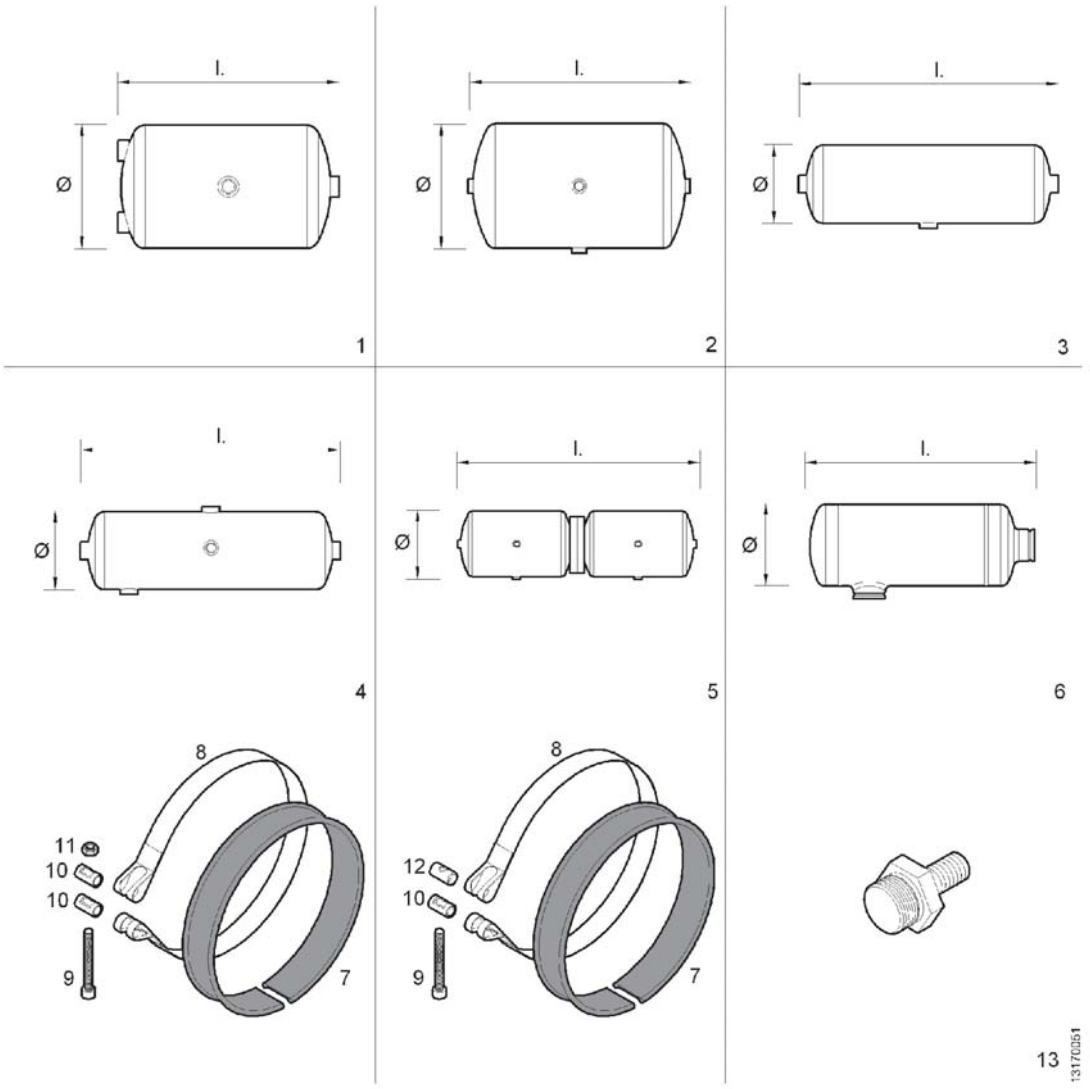

Pos.	Q.	Part n°	Description	Specification
1	#	637209020	Air tank	4,7l - Ø7" l.=9,25"
		637210350	Air tank	40l - Ø276mm l.=744mm
		-		
2	#	637206010	Air tank	20l - Ø200mm l.=712mm
		637202720	Air tank	20l - Ø250mm l.=502mm
		637206450	Air tank	30l - Ø200mm l.=997mm
		637202630	Air tank	30l - Ø250mm l.=706mm
		637202640	Air tank	30l - Ø200mm l.=522mm
		637202670	Air tank	40l - Ø300mm l.=670mm
		637202680	Air tank	45l - Ø300mm l.=738mm
		637202690	Air tank	60l - Ø300mm l.=960mm
		637202700	Air tank	75l - Ø300mm l.=1479mm
		-		
3	#	637208980	Air tank	1.5l - Ø3,5" l.=10"
		637208830	Air tank	3,75l - Ø101mm l.=497mm
		637202880	Air tank	8l - Ø150mm l.=514mm
		-		
4	#	637209060	Air tank	20l - Ø9,5" l.=19"

Tanks: steel (MAT:ST)

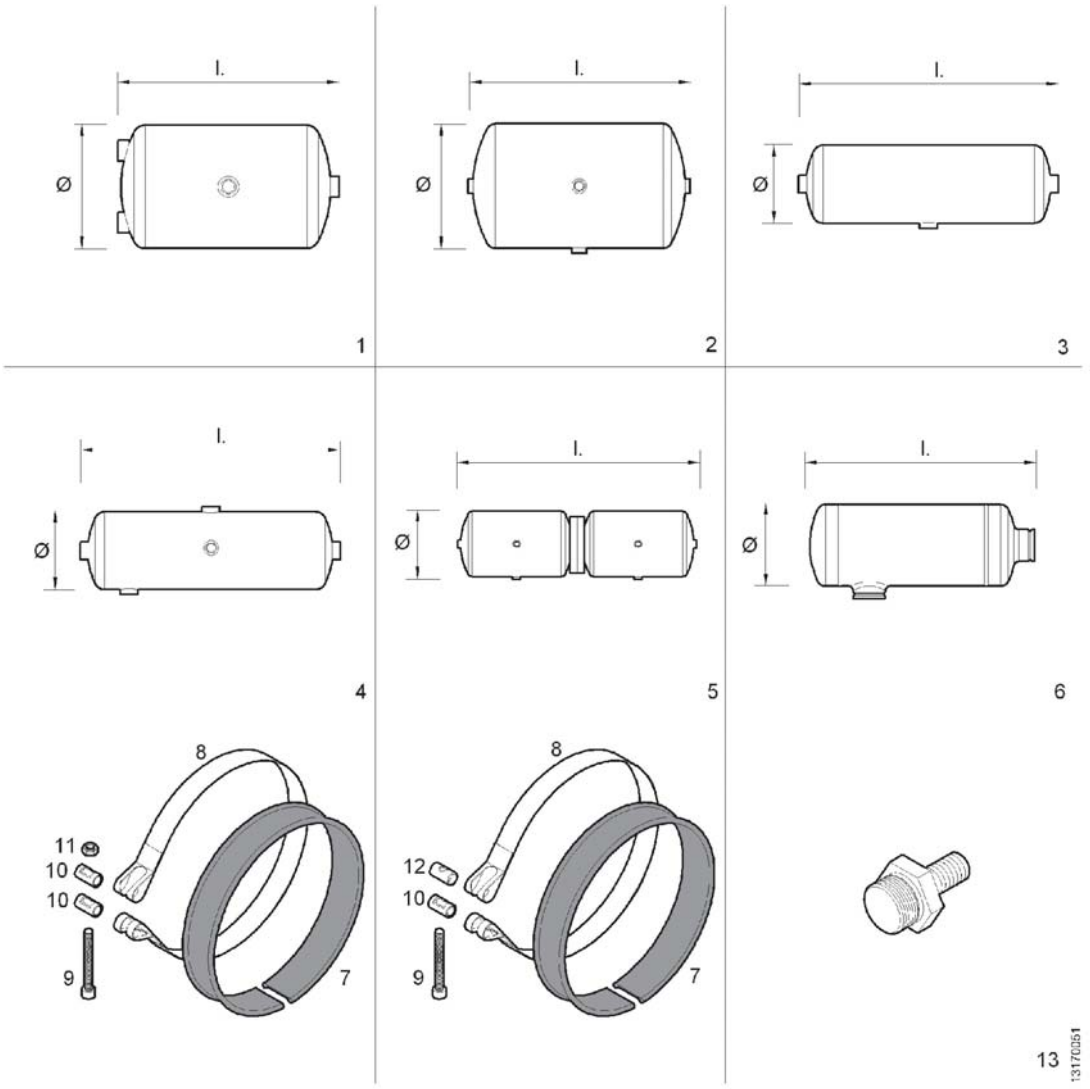

Pos.	Q.	Part n°	Description	Specification
		637209050	Air tank	29l - Ø9,5" l.=27"
		-		
5	#	637202740	Air tank	2x20l - Ø300mm l.=744mm
		637203010	Air tank	2x30l - Ø300mm l.=1040mm
		-		
6	#	11178020	Air tank	1,1l - Ø89mm l.= 242mm M22x1,5
		11181573	Air tank	1.1l - Ø89mm l.=242mm 1/2"NPT
		11181474	Air tank	1,1l - Ø89mm l.=242mm M22x1,5
		11198970	Air tank	1,1l Ø89mm l.=242mm 1/2NPT
		-		
7	#m	660057150	Rubber section	b.=50mm
		-		
8	#	10585737	Clamping band	Ø150mm MAT:IN
		10585738	Clamping band	Ø180mm MAT:IN
		10625164	Clamping band	Ø206mm MAT:IN
		10625167	Clamping band	Ø246mm MAT:IN
		10585739	Clamping band	Ø250mm MAT:IN
		10635486	Clamping band	Ø276mm MAT:IN

Tanks: steel (MAT:ST)

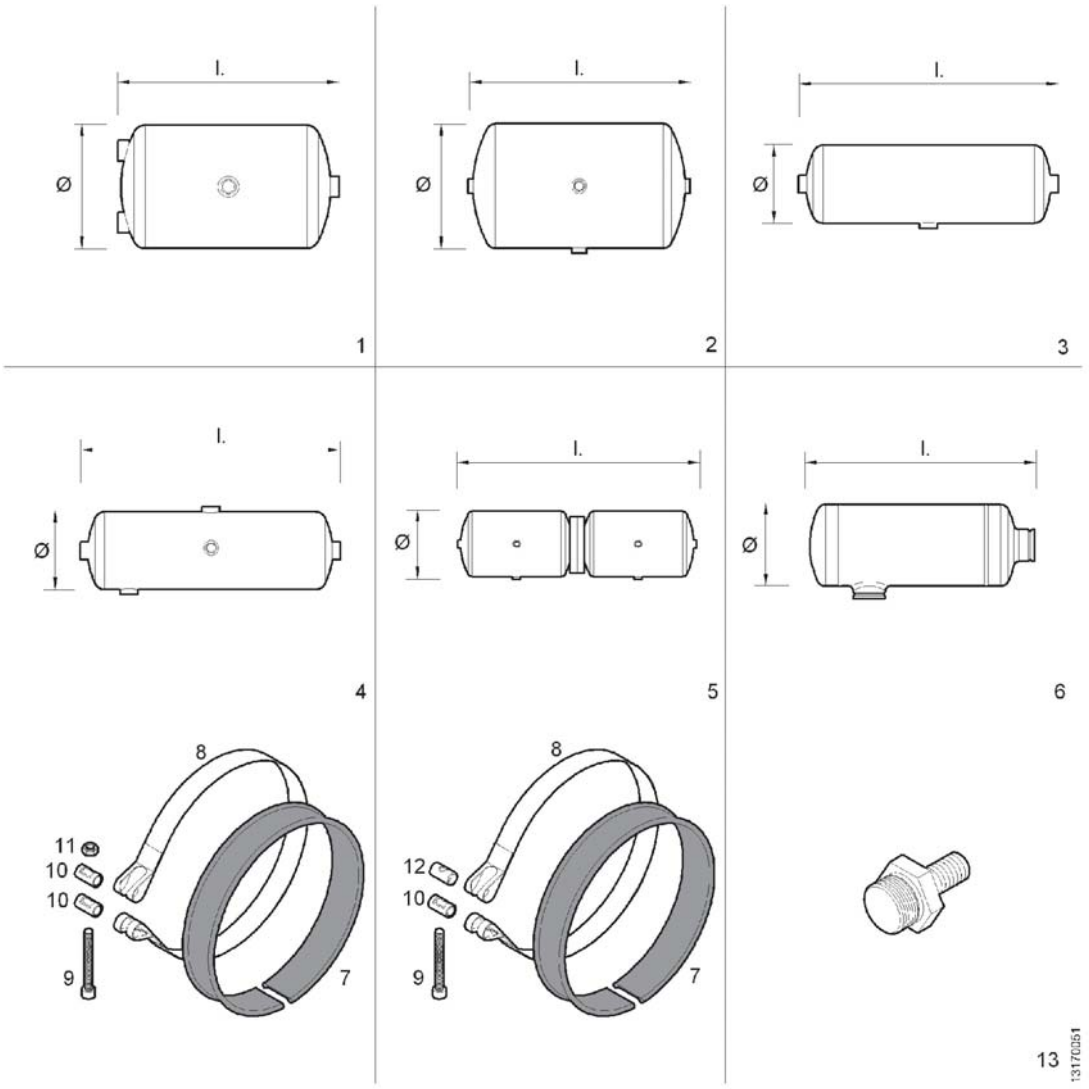

Pos.	Q.	Part n°	Description	Specification
		10625169	Clamping band	Ø296mm MAT:IN
		-		
9	#	660293901	Screw	DIN 912 M10x1,5x85 k.=8.8
10	#	10534772	Bush	Ø17xØ12,75x30
11	#	660203301	Nut	DIN 934 M10x1,5 k.=8
12	#	10534771	Bush	Ø17x30-M10
13	#	617300190	Fastener	M22x1,5-M12x1,75

Drain valves

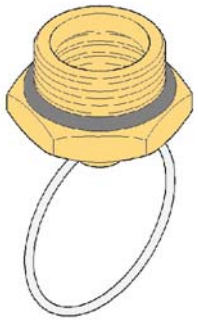

1

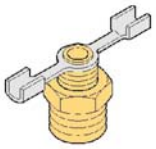

2

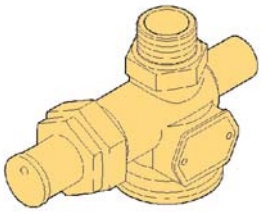

3

13170052

Pos.	Q.	Part n°	Description	Specification
1	#	11096976	Drain valve	max 13bar-M22x1,5
2	#	11147748	Drain valve	1/4"
	#	11147754	Drain valve	3/8"
3	#	10800572	Drain valve	

Hoses

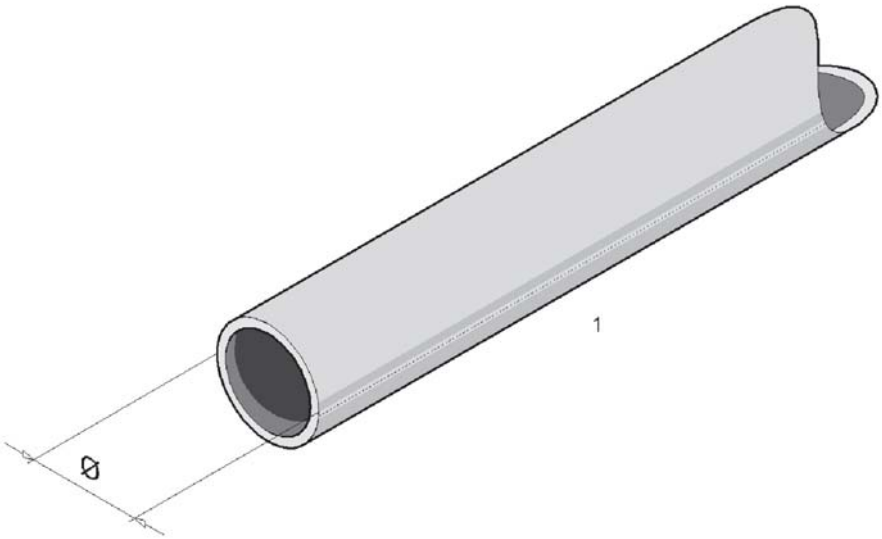

Pos.	Q.	Part n°	Description	Specification
1	#m	660516004	Hose	Ø1/4" MAT:P (Z)
	#m	634201870	Hose	Ø3/8" MAT:P (Z)
	#m	634201880	Hose	Ø1/2" MAT:P (Z)
	#m	660516208	Hose	Ø5/8" MAT: P (Z)
	#m	660515903	Hose	Ø4x1 MAT:P (Z)
	#m	11318584	Hose	Ø6x1 MAT:P (Z)
	#m	11318578	Hose	Ø8x1 MAT:P (Z)
	#m	11318580	Hose	Ø10x1 MAT:P (Z)
	#m	11318581	Hose	Ø12x1,5 MAT:P (Z)
	#m	11318582	Hose	Ø15x1,5 MAT:P (Z)
	#m	11318583	Hose	Ø18x2 MAT:P (Z)
	#m	660515910	Hose	Ø4x1 MAT:P (R)
	#m	660515913	Hose	Ø6x1 MAT:P (R)
	#m	660516006	Hose	Ø8x1 MAT:P (R)
	#m	660515909	Hose	Ø4x1 MAT:P (W)
	#m	660515906	Hose	Ø6x1 MAT:P (W)
	#m	660516003	Hose	Ø8x1 MAT:P (W)
	#m	660515912	Hose	Ø6x1 MAT:P (B)

Hoses

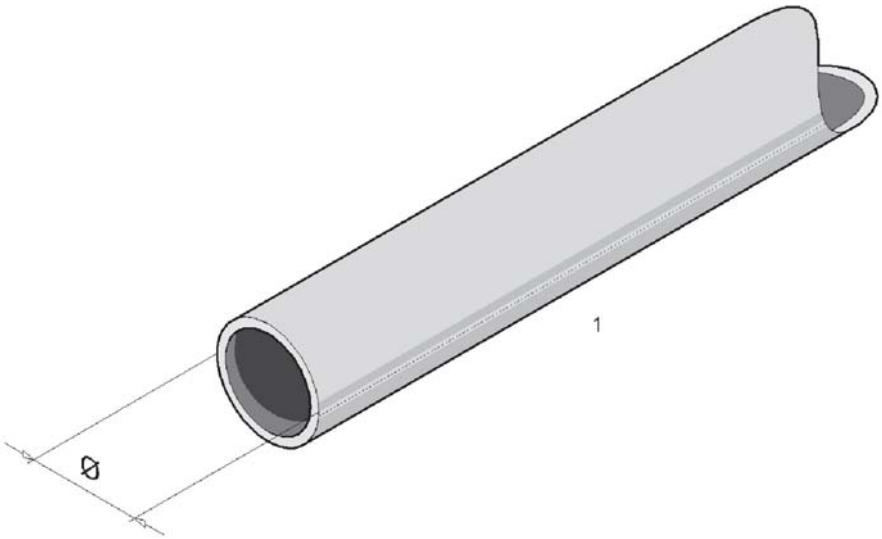

Pos.	Q.	Part n°	Description	Specification
	#m	660516009	Hose	Ø8x1 MAT:P (B)
	#m	11317494	Hose	Ø6x1 MAT:P (GN)
	#m	660516007	Hose	Ø8x1 MAT:P (GN)
	#m	660515915	Hose	Ø6x1 MAT:P (GE)
	#m	660515921	Hose	Ø6x1 MAT:P (GS)
	#m	660515919	Hose	Ø6x1mm MAT:P (BR)

Compressed air: steering wheel position control

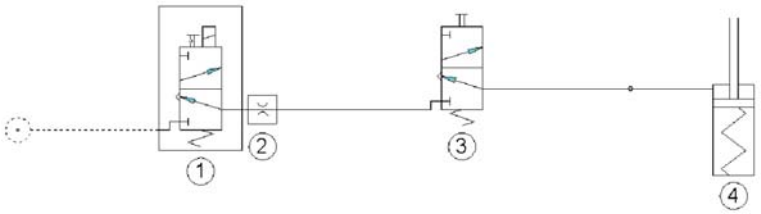

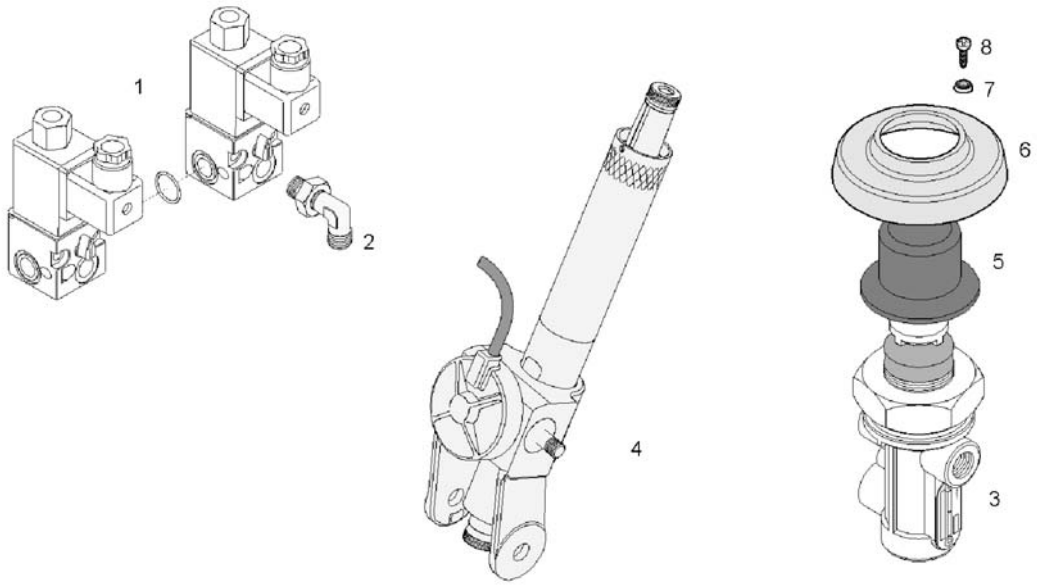

Pos.	Q.	Part n°	Description	Specification
1	1	»1313.00-....	Compressed air: solenoïd valve	
2	1	637317600	Throttle insert	1/8" Ø6
3	1	637204030	Emergency release valve	3/2
4	1	»0706.02-1...	Steering column	
5	1	10598064	Cap	MAT:P (Z)
6	1	10591501	Protection	(RAL 7012)
7	2	660639100	Washer	11x4
8	2	660274904	Screw	DIN 7983 3,5x1"

Alternator: parts

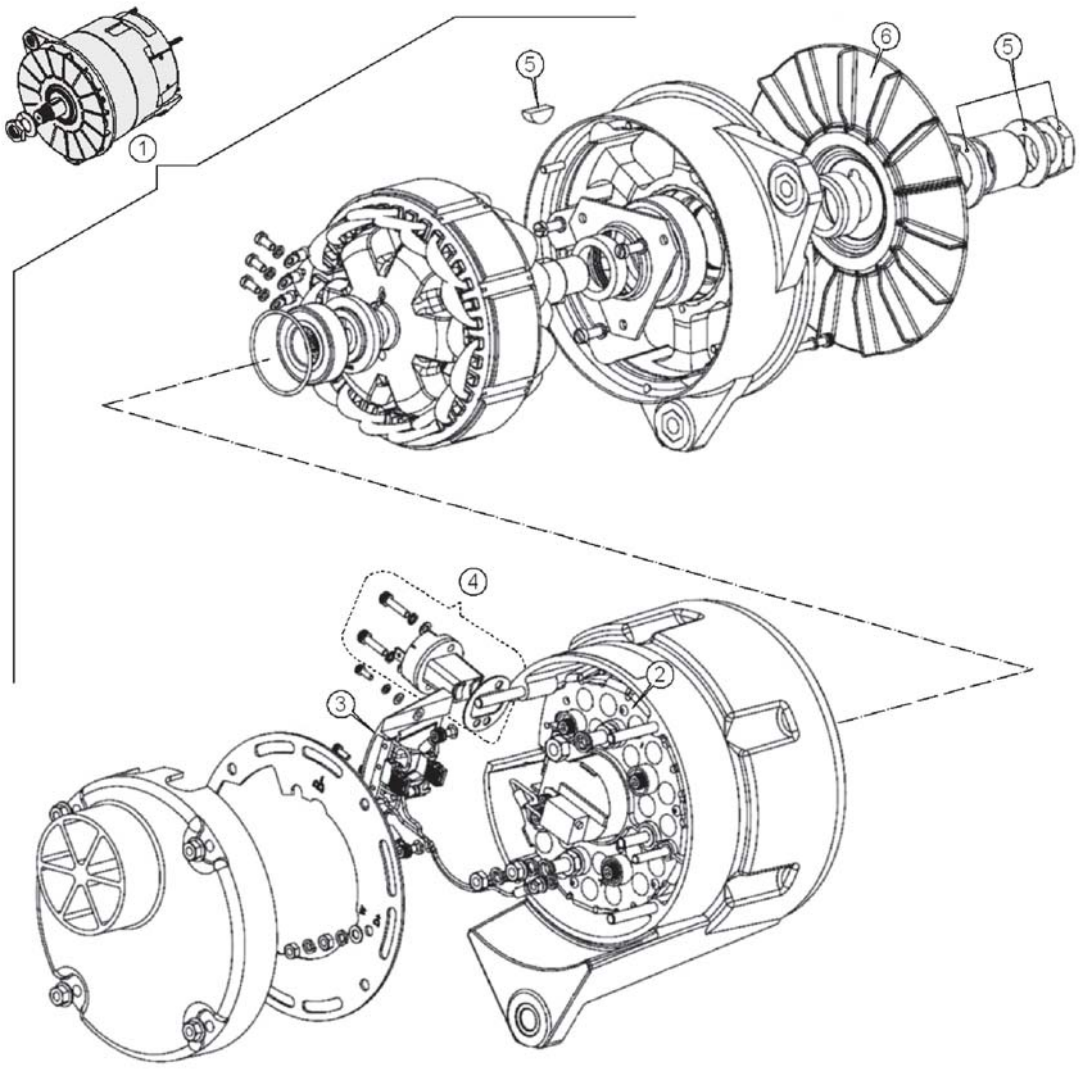

Pos.	Q.	Part n°	Description	Specification
1	1	11197256	Alternator	28,5V - 155A
2	*1	11283451	Rectifier	
3	*1	11283453	Voltage control unit	
4	*1	11283454	Set of carbon brushes	
5	*1	11283455	Set of assembly parts	
6	*1	11046645	Fan shroud	

24V/DC-system: batteries

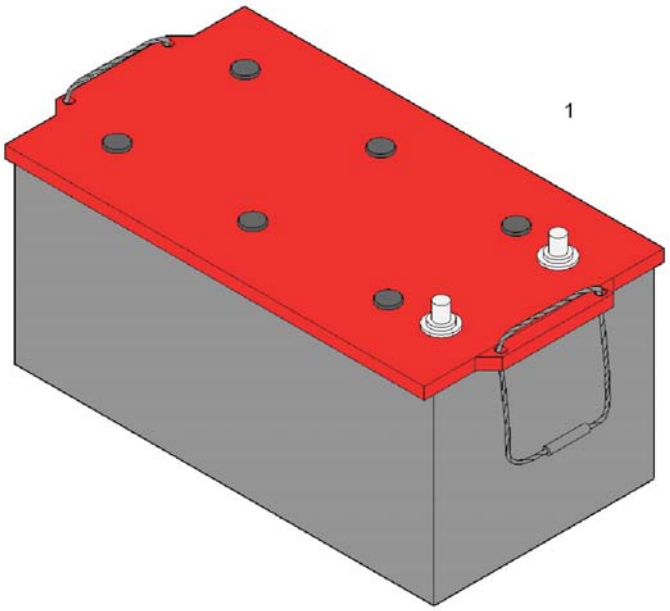

Pos.	Q.	Part n°	Description	Specification
1	2	11371034	Battery	12V/220Ah Polar Truck

Battery clamps

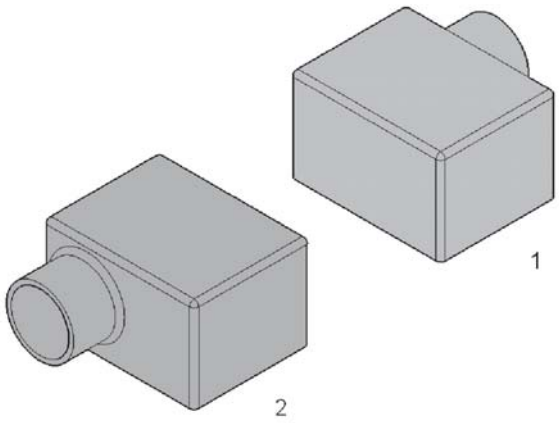

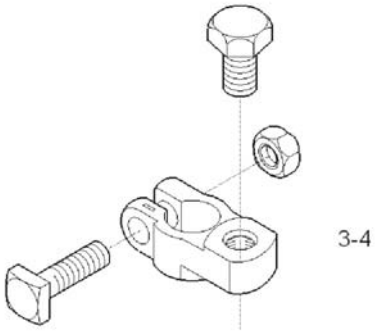

14100100

Pos.	Q.	Part n°	Description	Specification
1	2	10985618	Cap	Li (Z) MAT: P
2	2	10985619	Cap	Re (Z) MAT: P
3	1	660751406	Battery clamp	(-)
4	1	660751306	Battery clamp	(+)

Battery equalizer

Pos.	Q.	Part n°	Description	Specification
1	1	10983098	Battery equalizer	Vanner 70-60M

Engine control panel

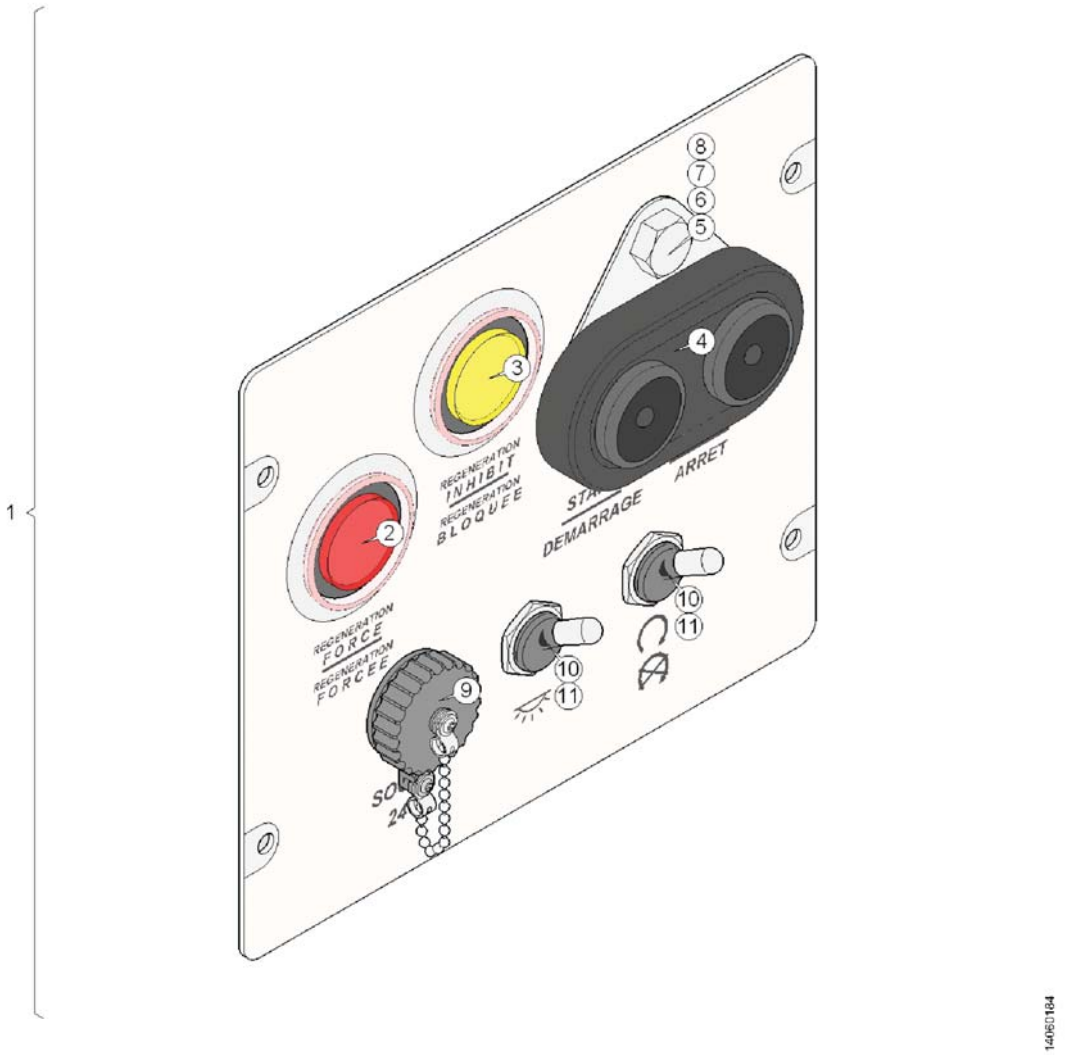

Pos.	Q.	Part n°	Description	Specification
1	1	11377947	Engine control panel	
		-		
2	1	11375050	Switch	(R)
3	1	11375052	Switch	(G)
4	1	11247896	Switch	(Z)
5	1	660229803	Screw	DIN 933 M8x16 MAT:IN
6	1	660625806	Washer	DIN 125 A8,4 MAT:IN
7	1	660636402	Coil spring lock washer	DIN 127 A8 MAT:IN
8	1	660209904	Nut	DIN 934 M8x1,25 MAT:IN
9	1	11271792	Plug socket	2P
10	2	11269942	Switch	
11	2	11269967	Sealing washer	(Z)

Cable terminals

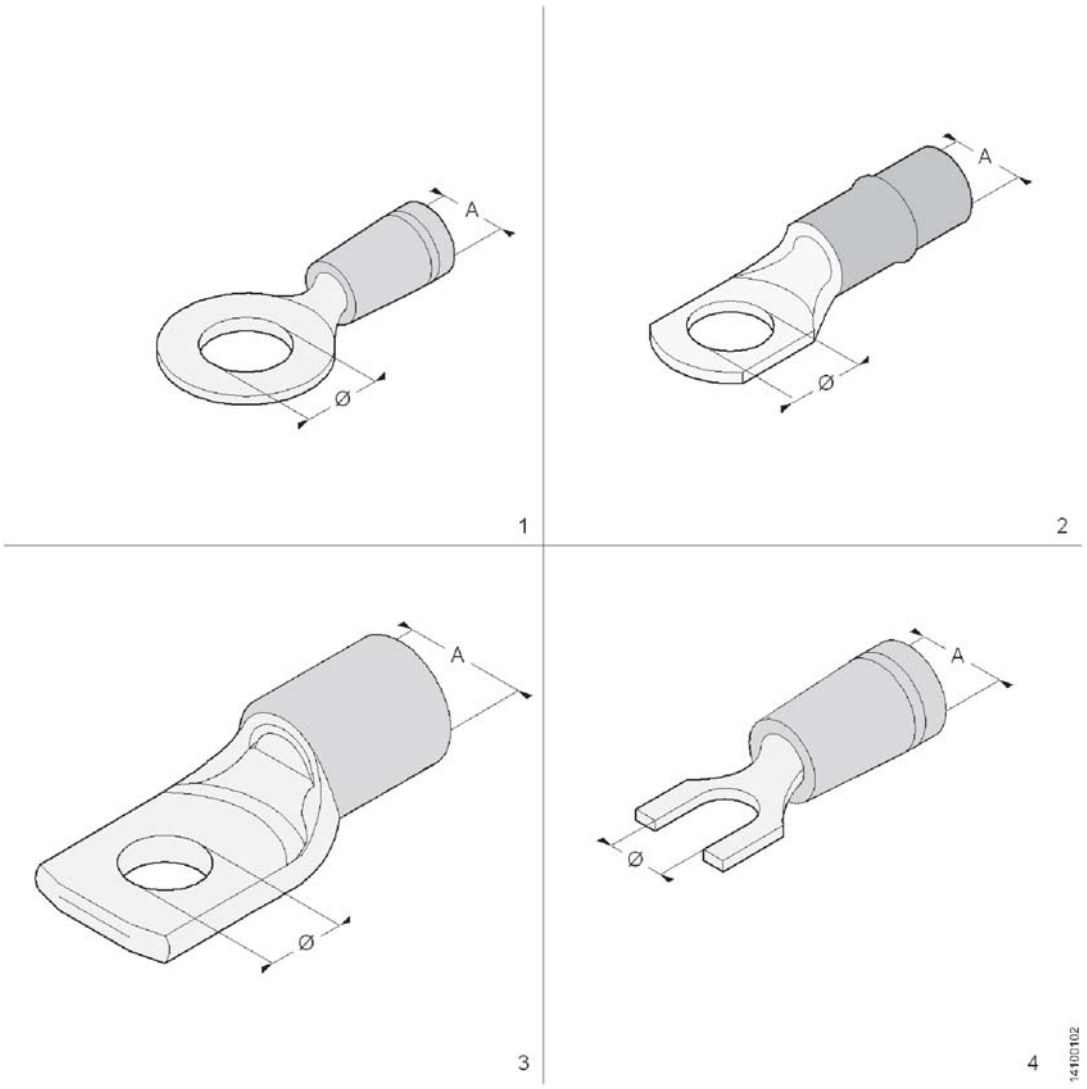

Pos.	Q.	Part n°	Description	Specification
1	#	11060866	Cable terminal	Ø4mm-Ø.25-1.6 (R)
		660765700	Cable terminal	Ø4mm-Ø1-2.6 (B)
		660765801	Cable terminal	Ø4mm-Ø2.7-6.6 (GE)
		11060875	Cable terminal	Ø5mm-Ø.25-1.6 (R)
		11276909	Cable terminal	Ø5mm-Ø1-2.6 (B)
		11060885	Cable terminal	Ø5mm-Ø2.7-6.6 (GE)
		660765330	Cable terminal	Ø5mm-Ø16 (B)
		660765309	Cable terminal	Ø5mm-Ø25 (GE)
		11060882	Cable terminal	Ø6mm-Ø.25-1.6 (R)
		11060879	Cable terminal	Ø6mm-Ø1-2.6 (B)
		11060887	Cable terminal	Ø6mm-Ø2.7-6.6 (GE)
		10866340	Cable terminal	Ø8mm-Ø.25-1.6 (R)
		660765320	Cable terminal	Ø8mm-Ø1-2.6 (B)
		11060890	Cable terminal	Ø8mm-Ø2.7-6.6 (GE)
		660765318	Cable terminal	Ø10mm-Ø1-2.6 (B)
		11002564	Cable terminal	Ø10mm-Ø2.7-6.6 (GE)
		10655210	Cable terminal	Ø12mm-Ø2.7-6.6 (GE)
		10956173	Cable terminal	Ø12mm-Ø35 (R)

Cable terminals

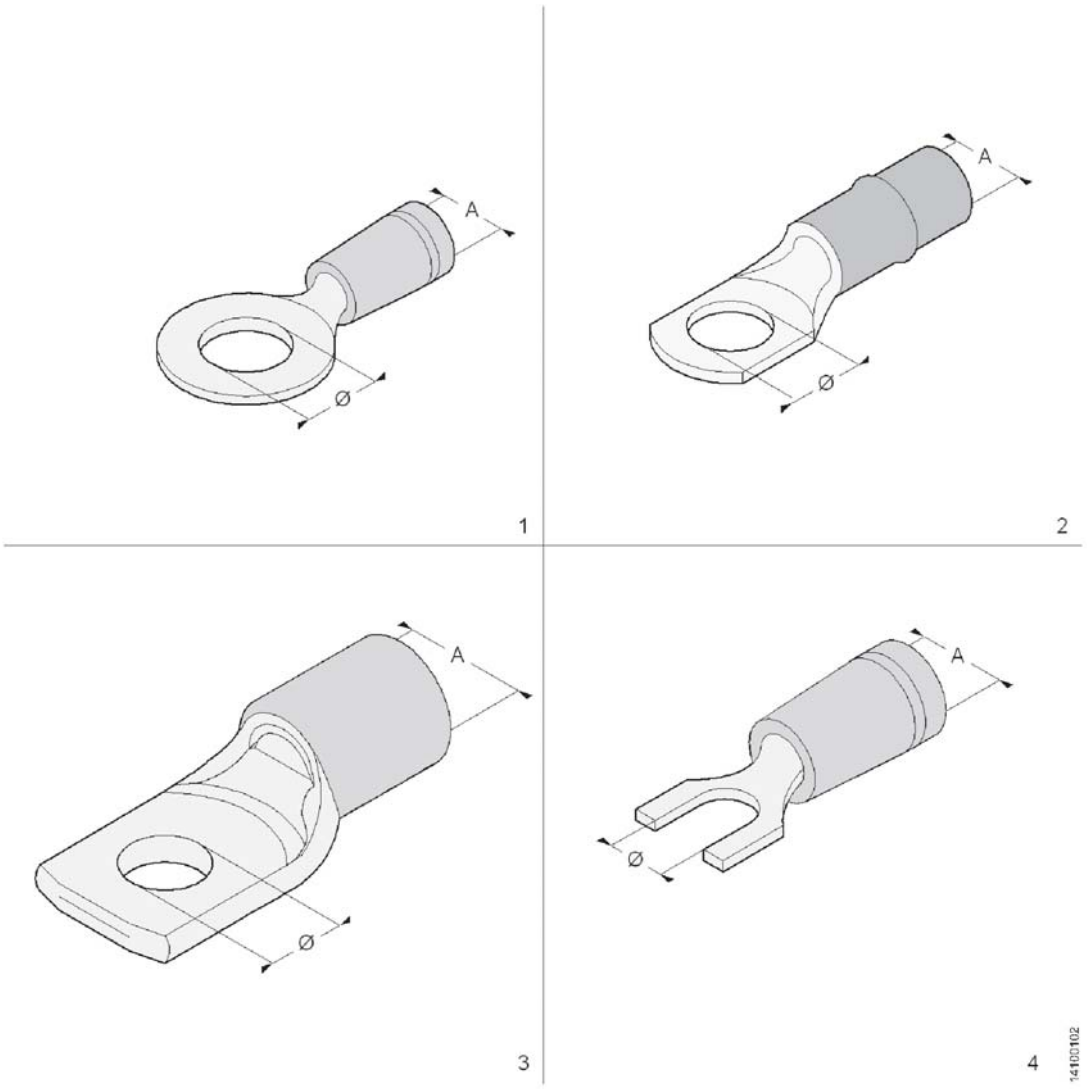

Pos.	Q.	Part n°	Description	Specification
2	#	10977631	Cable terminal	Ø6mm-Ø10 (R)
		10956163	Cable terminal	Ø6mm-Ø16 (B)
		10956159	Cable terminal	Ø6mm-Ø25 (GE)
		10956168	Cable terminal	Ø6mm-Ø35 (R)
		10977632	Cable terminal	Ø8mm-Ø10 (R)
		10956164	Cable terminal	16mm² Ø8
		10956160	Cable terminal	Ø8mm-Ø25 (GE)
		10956170	Cable terminal	Ø8mm-Ø35 (R)
		660765300	Cable terminal	Ø10mm-Ø10 (R)
		10956155	Cable terminal	16mm² Ø10
		10955168	Cable terminal	Ø10mm-Ø25 (GE)
		10956172	Cable terminal	Ø10mm-Ø35 (R)
3	#	660765329	Cable terminal	Ø5mm-Ø10
		10956706	Cable terminal	Ø5mm-Ø16
		10956707	Cable terminal	Ø5mm-Ø25
		660765310	Cable terminal	Ø6mm-Ø50
		10520290	Cable terminal	Ø8mm-Ø50
		660765104	Cable terminal	Ø8mm-Ø70

Cable terminals

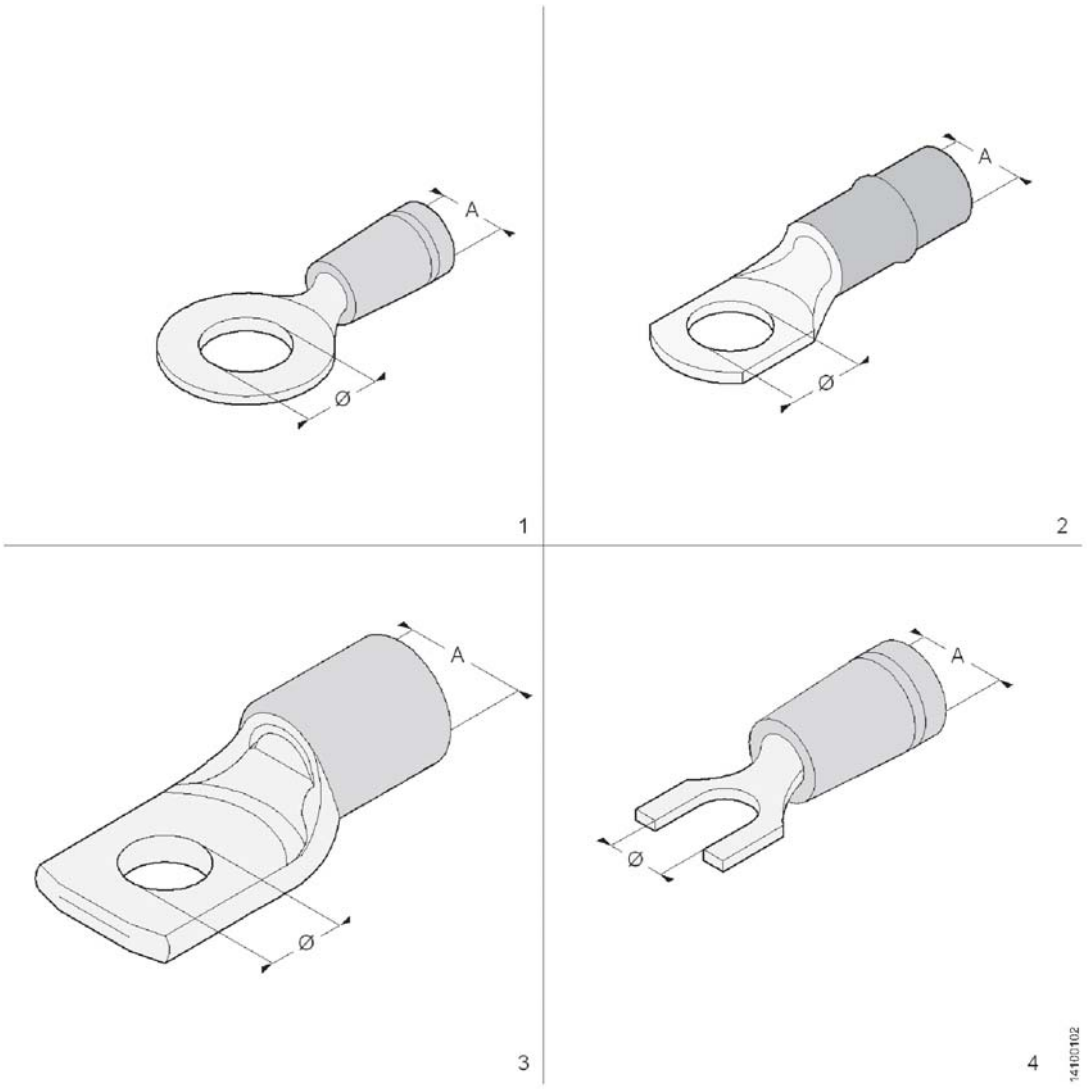

Pos.	Q.	Part n°	Description	Specification
4		660765107	Cable terminal	Ø10mm-Ø50
		660765108	Cable terminal	Ø10mm-Ø70
		660765109	Cable terminal	Ø10mm-Ø120
		10956157	Cable terminal	16mm² Ø12
		660765327	Cable terminal	Ø12mm-Ø50
		660765110	Cable terminal	Ø12mm-Ø120
		660765818	Cable terminal	Ø13mm-Ø50
		660765100	Cable terminal	Ø13mm-Ø70
		660765002	Cable terminal	Ø13mm-Ø90
		660766325	Cable terminal	Ø3mm-Ø.25-1.6 (R)
		660766326	Cable terminal	Ø4mm-Ø.25-16 (R)
		660765326	Cable terminal	Ø4mm-Ø1-2.6 (B)
		660766327	Cable terminal	Ø4mm-Ø2.7-6.6 (GE)

Connectors: Multilock

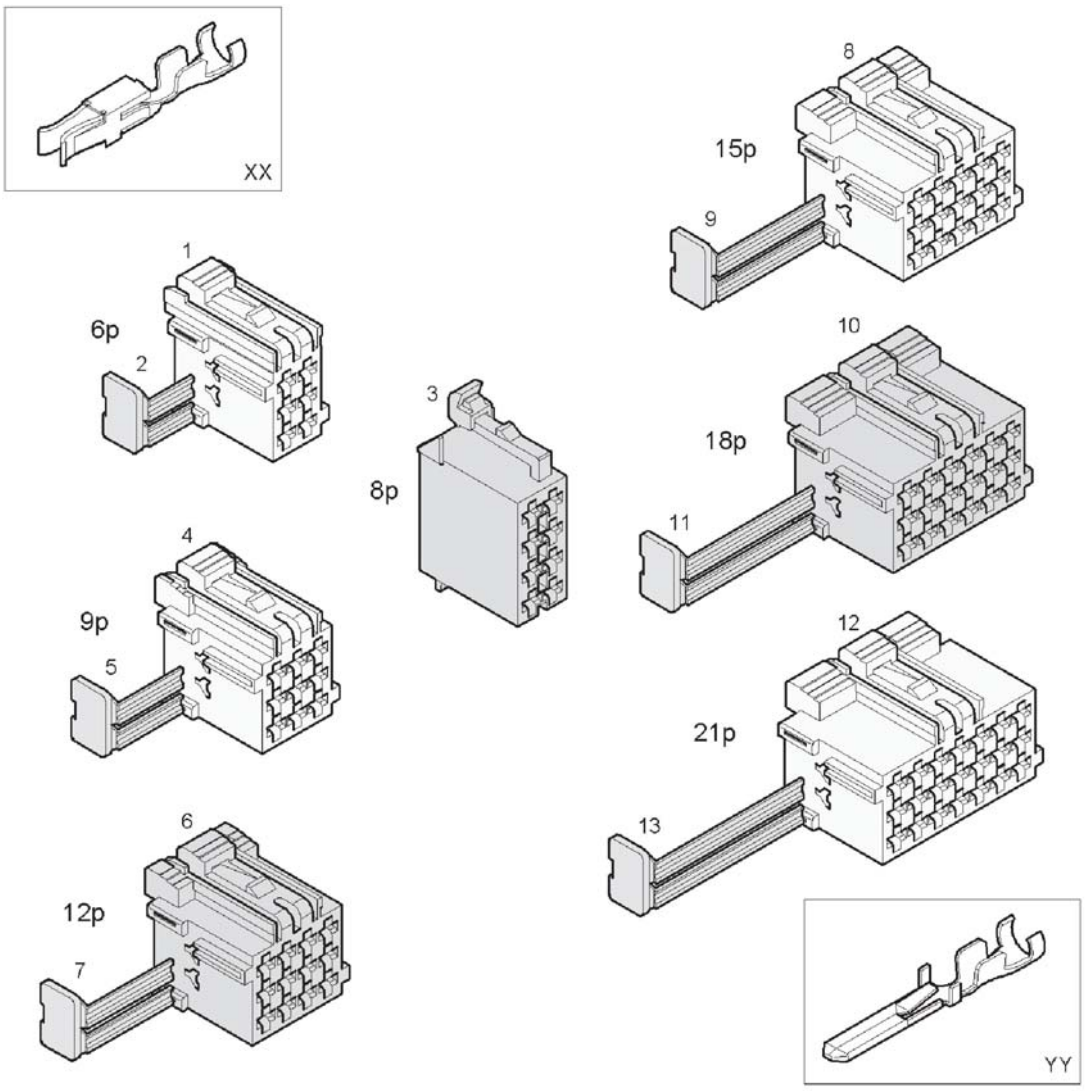

Pos.	Q.	Part n°	Description	Specification
1	#	10616406	Socket	6P (Z)
2	#	10862482	Secondary locking device	(B)
3	#	10763285	Socket	8P (GS)
3	#	10763286	Socket	8P (BR)
4	#	10616404	Socket	9P (GS)
5	#	10790931	Secondary locking device	(G)
6	#	10616403	Socket	12P (GN)
6	#	10790928	Socket	12P (GE)
7	#	10801947	Secondary locking device	(GN)
8	#	N254320378	Socket	15P (GS)
9	#	10861784	Secondary locking device	(V)
10	#	10640341	Socket	18P (GS)
10	#	10623708	Socket	18P (GE)
10	#	10616400	Socket	18P (Z)
11	#	10799865	Secondary locking device	(GS)
12	#	10858312	Socket	21P (BR)
13	#	10858344	Secondary locking device	(BR)
XX	#	10616407	Cable terminal	0,5 - 1mm² (F)

Connectors: Multilock

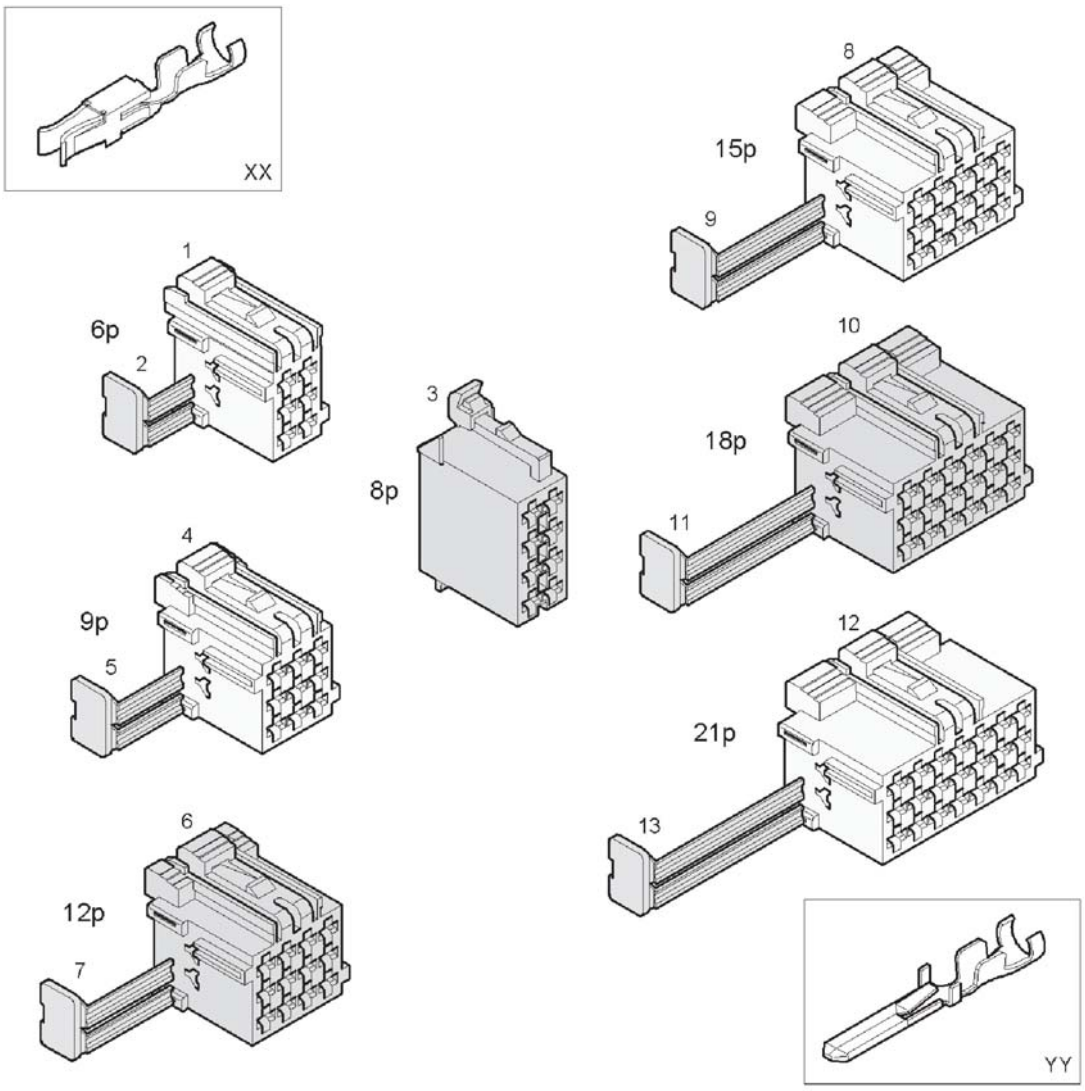

Pos.	Q.	Part n°	Description	Specification
	#	10550247	Cable terminal	1,5 - 2,5mm² (F)
	#	10550247	Cable terminal	1,5 - 2,5mm² (F)
YY	#	660765195	Contact	0,5 - 1mm² (M)
	#	920915831	Contact	1,5 - 2,5mm² (M)

Connectors: MCP 2.8

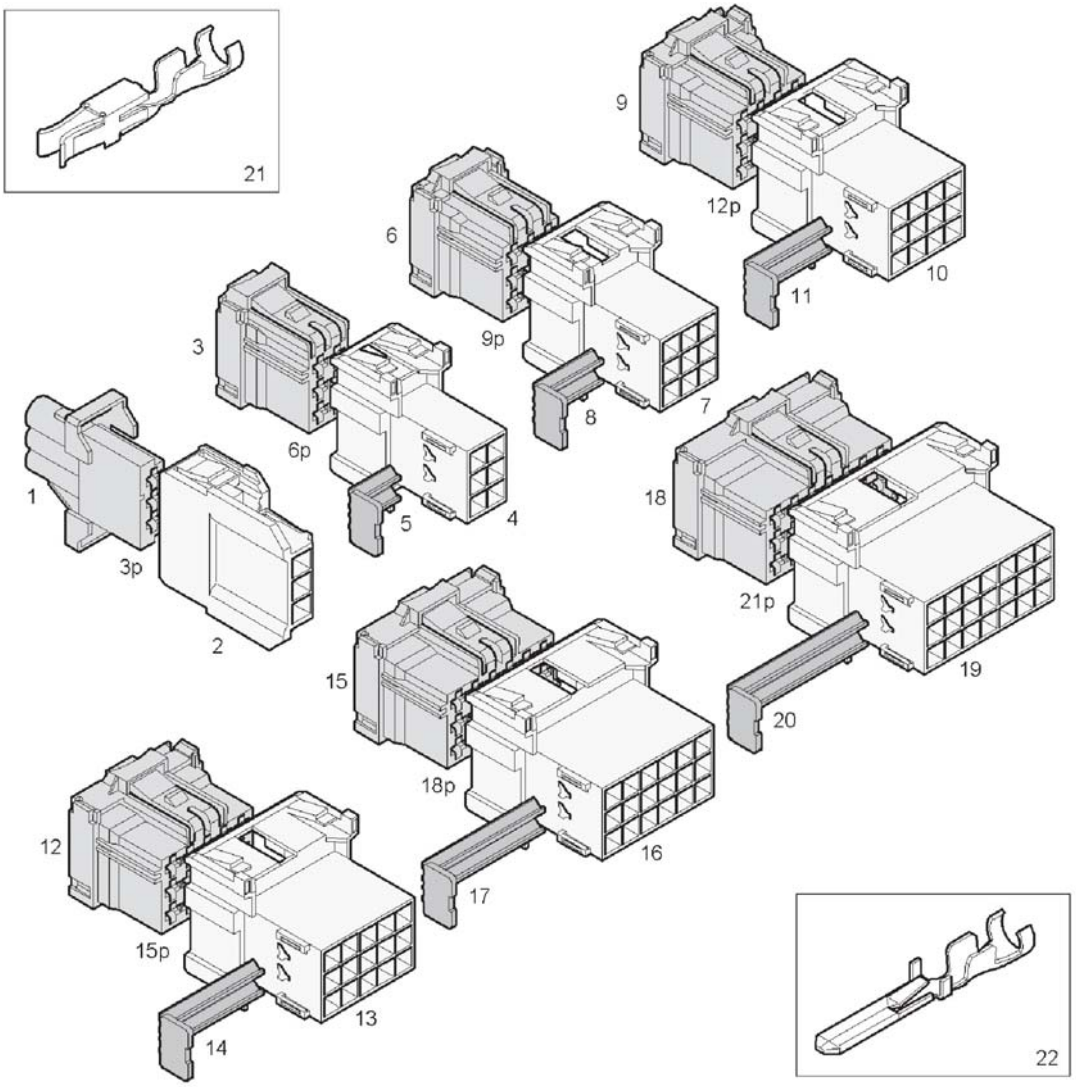

Pos.	Q.	Part n°	Description	Specification
1	#	10988787	Socket	3P (Z)
	#	11263175	Socket	3P (B)
2	#	11078034	Plug	3P (Z)
	#	11263186	Plug	3P (B)
3	#	10988784	Socket	6P (B)
	#	11053145	Socket	6P (T)
	#	11263178	Socket	6P (GS)
4	#	10860381	Plug	6P (B)
	#	11053156	Plug	6P (T)
	#	11263333	Plug	6P (GS)
5	#	10862482	Secondary locking device	(B)
6	#	10988782	Socket	9P (GE)
	#	11141823	Socket	9P (B)
	#	11263179	Socket	9P (T)
	#	11263180	Socket	9P (GS)
7	#	10850664	Plug	9P (GE)
	#	11141824	Plug	9P (B)
	#	11263335	Plug	9P (T)

Connectors: MCP 2.8

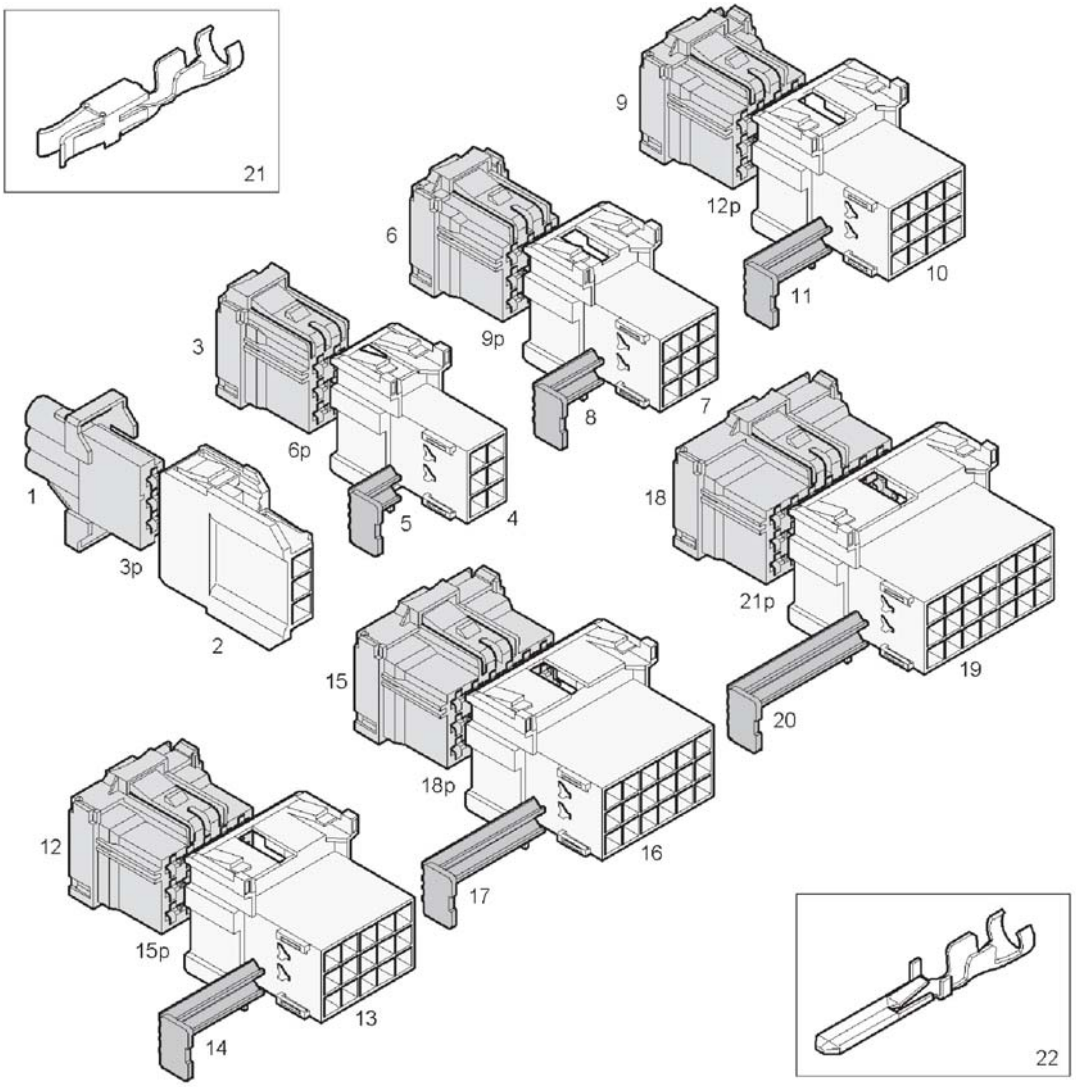

Pos.	Q.	Part n°	Description	Specification
	#	11263336	Plug	9P (GS)
8	#	10790931	Secondary locking device	(G)
9	#	10988783	Socket	12P (GN)
	#	11053148	Socket	12P (B)
	#	11263182	Socket	12P (T)
	#	11263183	Socket	12P (V)
10	#	11053158	Plug	12P (GN)
	#	11053161	Plug	12P (B)
	#	11263337	Plug	12P (T)
	#	11263338	Plug	12P (V)
11	#	10801947	Secondary locking device	(GN)
12	#	10988785	Socket	15P (V)
	#	11134563	Socket	15P (GS)
	#	11263185	Socket	15P (B)
	#	11263184	Socket	15P (T)
13	#	11058537	Plug	15P (V)
	#	11134562	Plug	15P (GS)
	#	11263341	Plug	15P (B)

Connectors: MCP 2.8

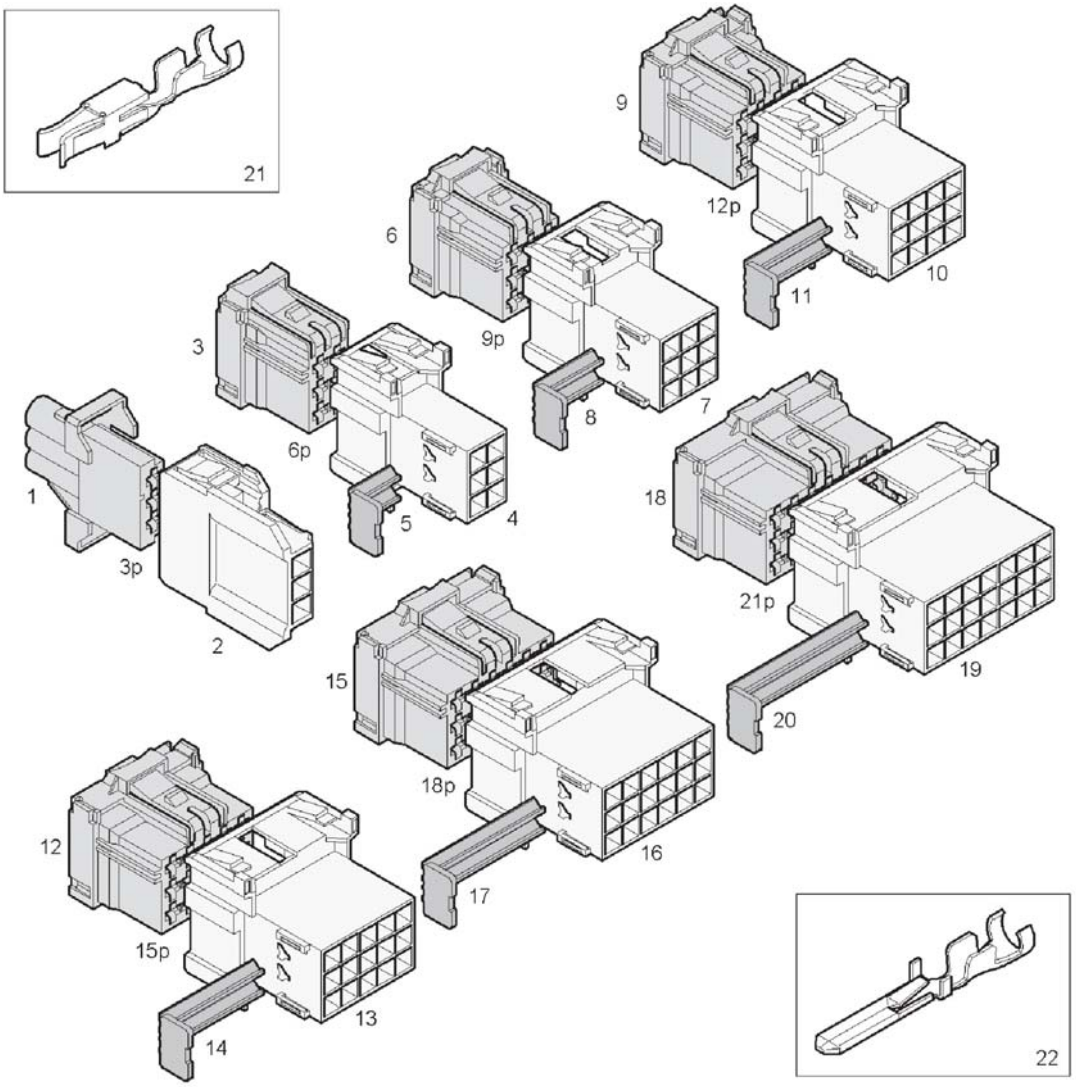

Pos.	Q.	Part n°	Description	Specification
	#	11263340	Plug	15P (T)
14	#	10861784	Secondary locking device	(V)
15	#	10988781	Socket	18P (GS)
	#	10999189	Socket	18P (T)
	#	10999205	Socket	18P (B)
16	#	10962682	Plug	18P (GS)
17	#	10799865	Secondary locking device	(GS)
18	#	10988780	Socket	21P (BR)
	#	11053150	Socket	21P (T)
	#	11053151	Socket	21P (B)
	#	11134561	Socket	21P (GS)
19	#	11053163	Plug	21P (BR)
	#	11053166	Plug	21P (T)
	#	11053167	Plug	21P (B)
	#	11134560	Plug	21P (GS)
20	#	10858344	Secondary locking device	(BR)
21	#	10988794	Cable terminal	0,5 - 1mm² (F)
	#	10988795	Cable terminal	1,5 - 2,5mm² (F)

Connectors: MCP 2.8

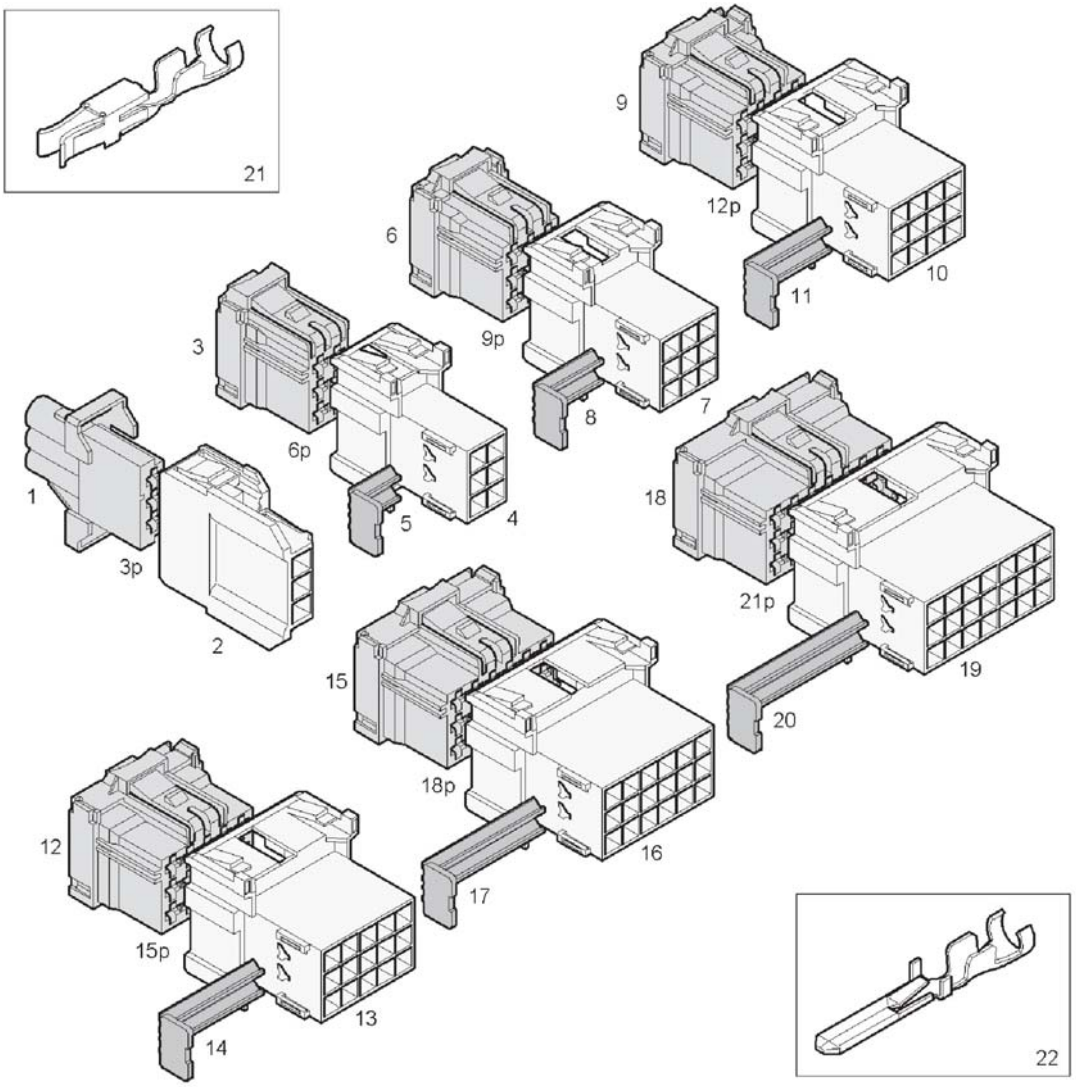

Pos.	Q.	Part n°	Description	Specification
22	#	10962683	Contact	0,5 - 1mm² (M)
	#	11068549	Contact	1,5 - 2,5mm² (M)

Junction block

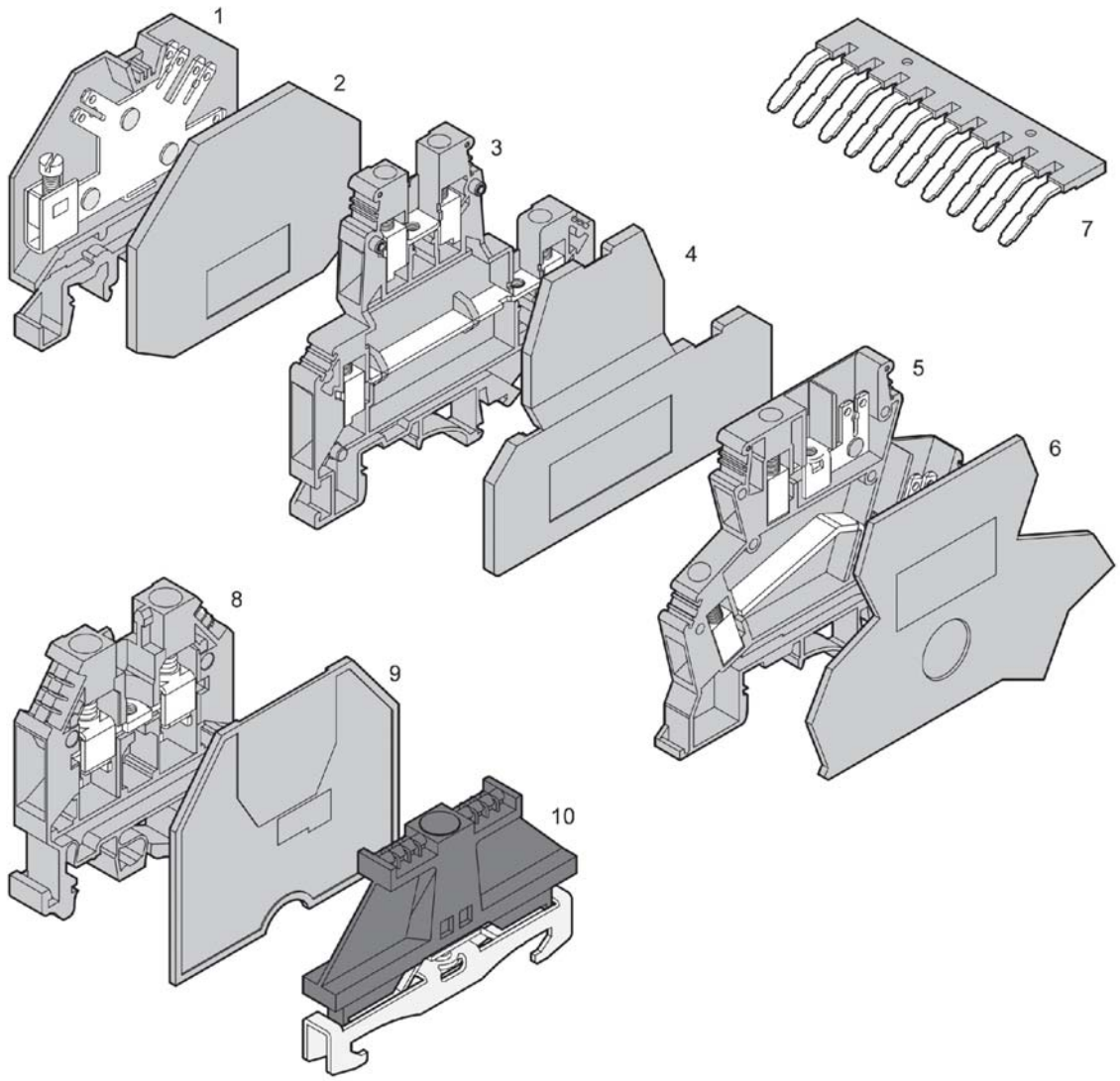

Pos.	Q.	Part n°	Description	Specification
1	#	10710835	Connector	
2	#	10710836	Endplate	
3	#	10710946	Connector	
4	#	10710969	Endplate	
5	#	10708838	Connector	
6	#	10708849	Endplate	
7	#	10710837	Bridge	
8	#	10578094	Connector	
9	#	10578097	Insulator	
10	#	660749811	End part	

Switches

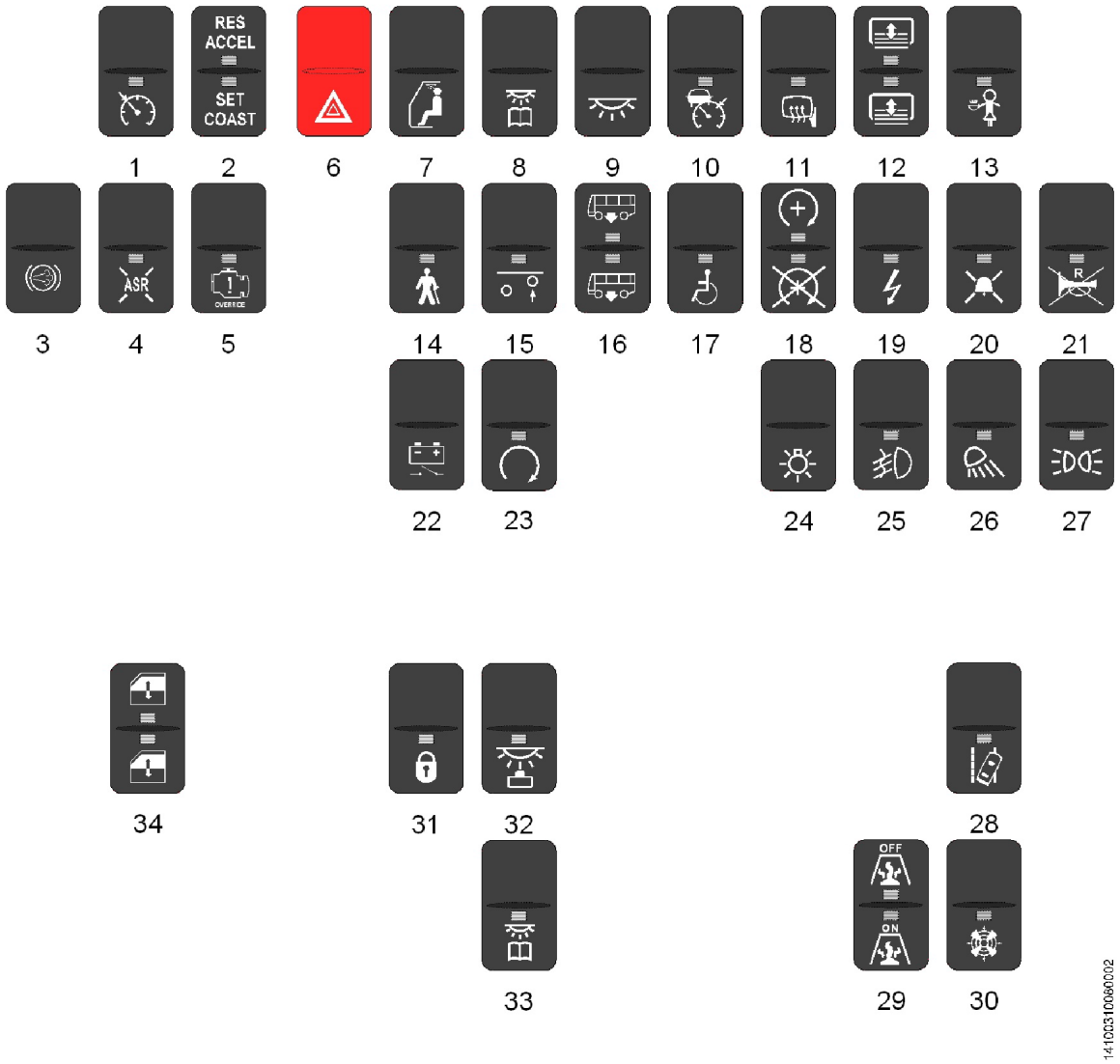

Pos.	Q.	Part n°	Description	Specification
1	1	11358018	Switch, Dash - Cruise On/Off	354.113-722
2	1	11358019	Switch, Dash - Cruise Set/Resume	354.113-732
3	1	11357988	Switch, Dash - Jake Brake	354.113-702
4	1	11278489	Switch, Dash - ATC	354 107-972
5	1	11357994	Switch, Dash - Overide	354.113-712
6	1	11278669	Switch, Dash - Hazard	354 108-062
7	1	11278675	Switch, Dash - Driver's Light	354 108-082
8	1	11278671	Switch, Dash - Reading Lights	354 108-072
9	1	11278673	Switch, Dash - Passenger Lights	354 105-302
10	1	11322033	Switch, Dash - Adaptive Cruise	354.111-782
11	1	11278754	Switch, Dash - Mirror Heating	354 101-532
12	1	11278687	Switch, Dash - Roller Curtains	354 108-122
13	1	11278709	Switch, Dash - Guide Call	354 108-142
14	1	11378935	Switch, Dash - Kneeler	354 115-652
15	1	11278491	Switch, Dash - Tag Un-loader	354 107-992
16	1	11278482	Switch, Dash - Raise/Lower	354 107-942
17	1	11278487	Switch, Dash - Wheelchair Lift	354 107-962
18	1	11401378	Switch, Dash - Increase RPM	354 117-152

Switches

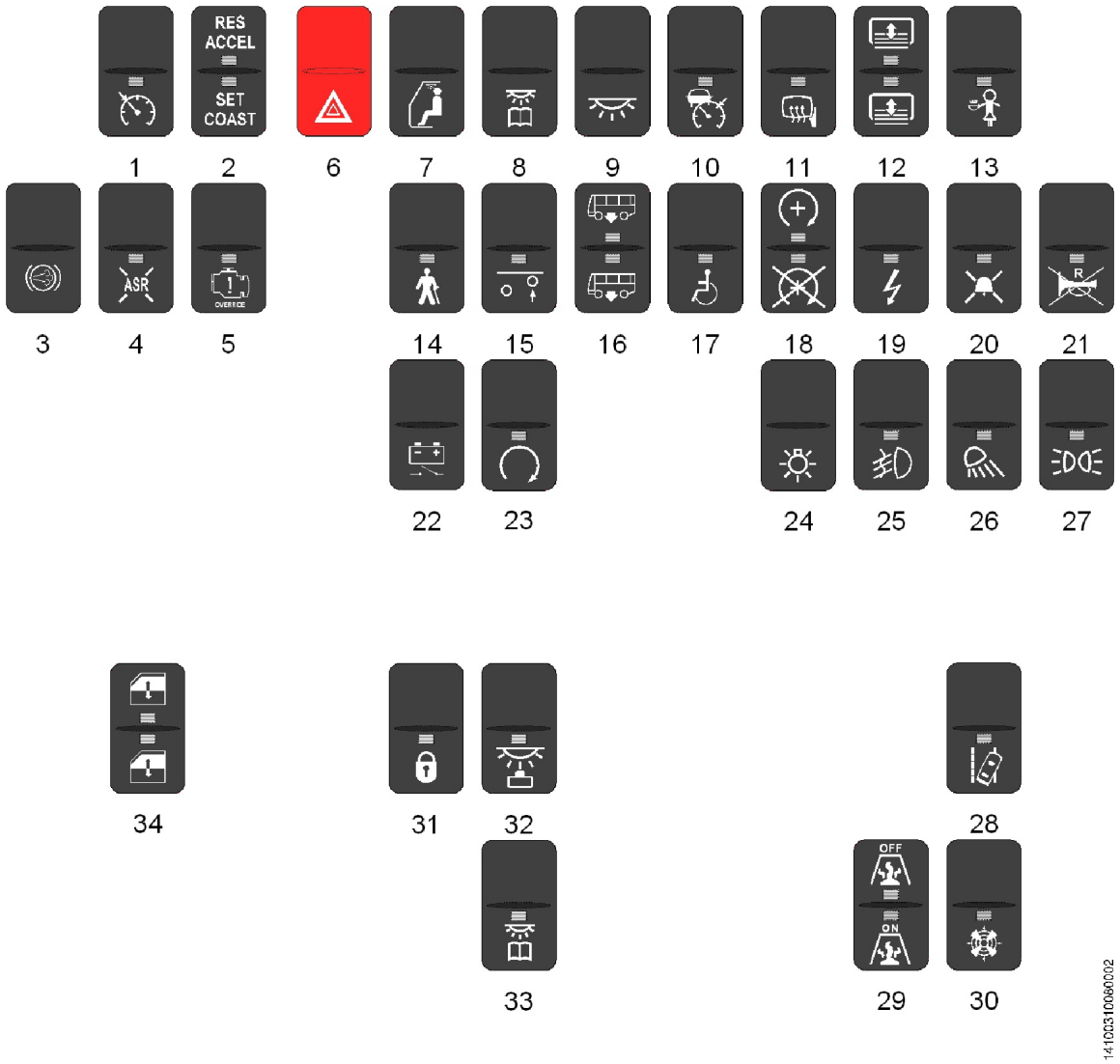

Pos.	Q.	Part n°	Description	Specification
19	1	11278427	Switch, Dash - 120v Outlets	354 107-892
20	1	11278832	Switch, Dash - Passenger Signal	354 108-372
21	1	11278445	Switch, Dash - Back-up Alarm	354 107-902
22	1	11333724	Switch, Dash - Master	354.112-472
23	1	11278415	Switch, Dash - Start	354 103-342
24	1	11278641	Switch, Dash - Exterior Lights	354 106-922
25	1	11278639	Switch, Dash - Fog Lamps	354 107-802
26	1	11278720	Switch, Dash - Perimeter Lights, RH	354 102-192
27	1	11378850	Switch, Cornering Lamps	354 155-642
28	1	11278627	Switch, Dash - Lane Departure	354 108-002
29	1	11358024	Switch, Dash - Heater On/Off	354.113-742
30	1	11278822	Switch, Dash - Fan	354 108-302
31	1	11278632	Switch - Dash - Baggage Bay Lock	354 108-012
32	1	11278683	Switch - Luggage Lights	354 108-102
33	1	11278681	Switch, Dash - Guide Light	354 108-482
34	1	11278797	Switch, Dash - - Driver's Window	354 108-252

Multifunctional control

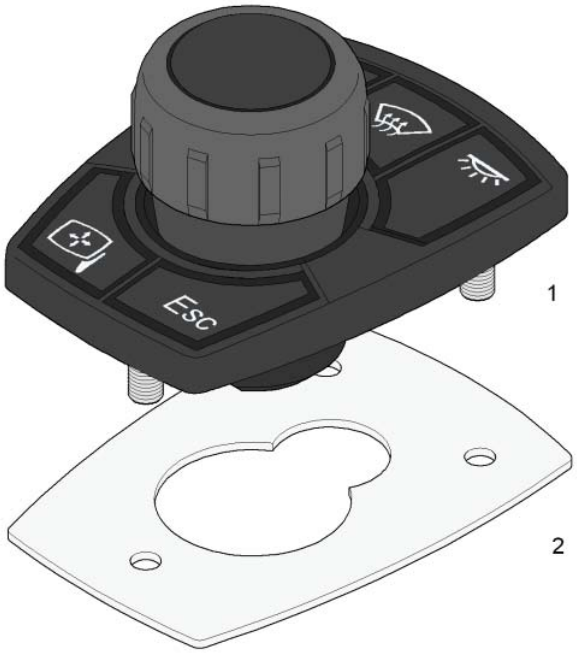

Pos.	Q.	Ref.N°	Description	Spec.
1	1	11266940	Multifunctional control	
2	1	11327121	Mounting bracket	

Switches

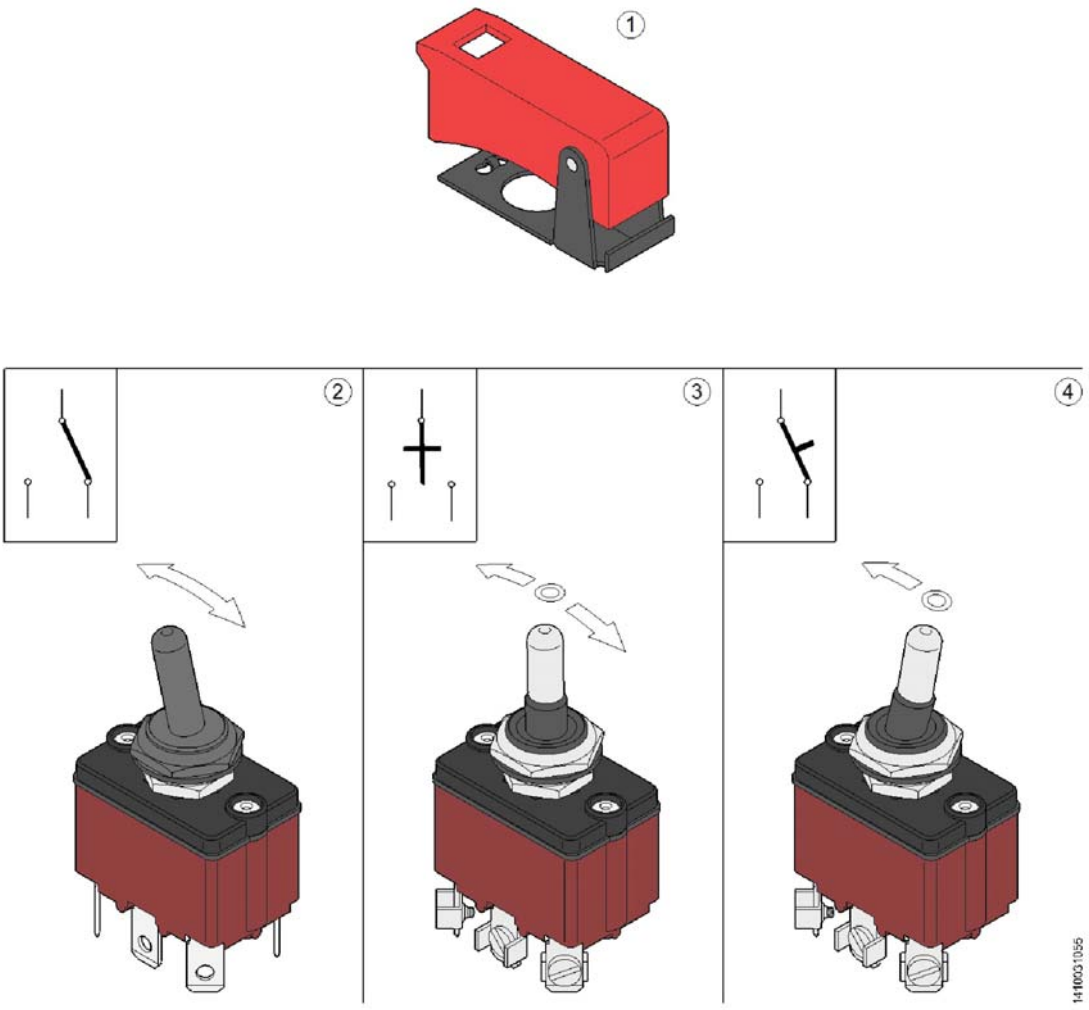

Pos.	Q.	Part n°	Description	Specification
1	1	10631243	Cap	(R)
2	1	10640357	Switch	3646 NF
3	1	10759354	Push button	3637 NF
4	1	10828328	Switch	3635 NF

Switches

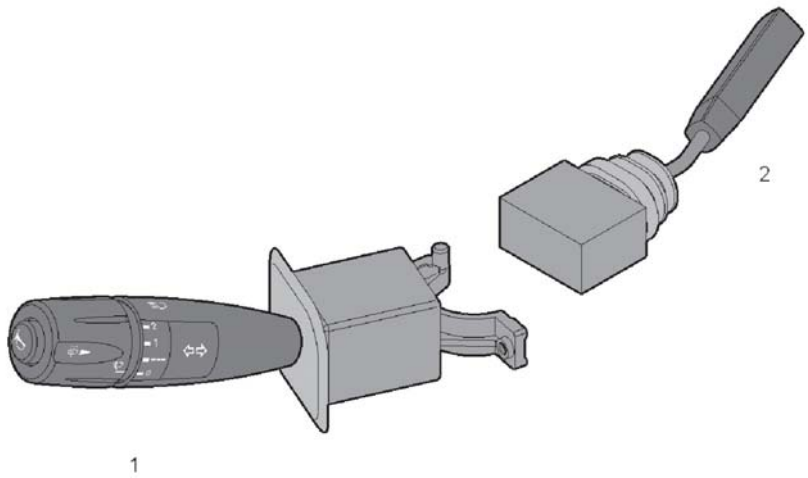

14100117

Pos.	Q.	Part n°	Description	Specification
1	1	701892960	Switch	
2	1	10984328	Switch	

Mechanical battery isolation switch

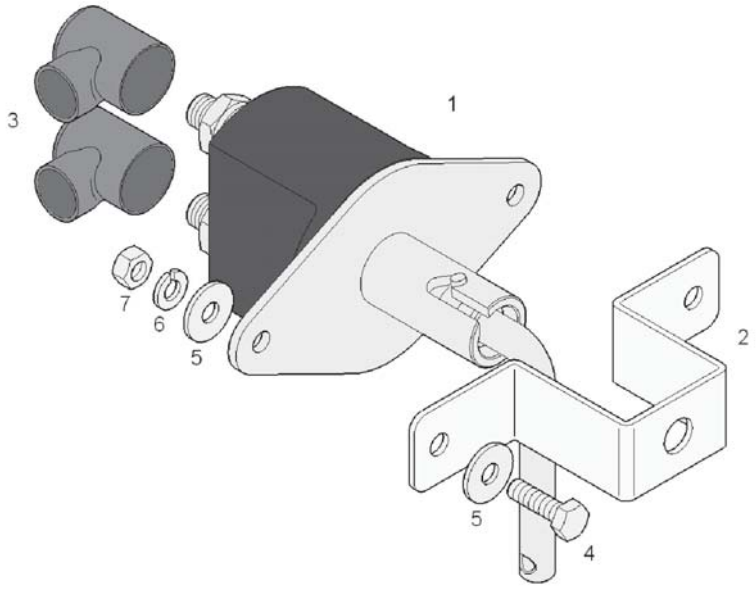

Pos.	Q.	Part n°	Description	Specification
1	1	660751103	Battery isolation switch	
2	1	10903404	Bracket	
3	2	10951656	Protection shield	
4	2	660229754	Screw	DIN 933 M6x1x20 MAT:IN
5	4	660623508	Washer	DIN 9021 M6 MAT:IN
6	2	660636302	Coil spring lock washer	DIN 127 A6 MAT:IN
7	2	660209922	Nut	DIN 934 M6x1 MAT:IN

Push button

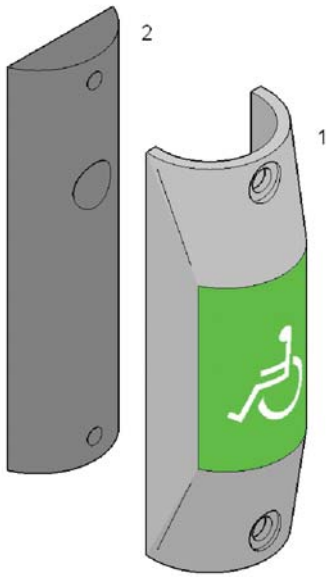

14100116

Pos.	Q.	Part n°	Description	Specification
1	2	660761541	Push button	(GS-GN) Ø35
2	2	10565341	Spacer	110x33

Battery isolation switch

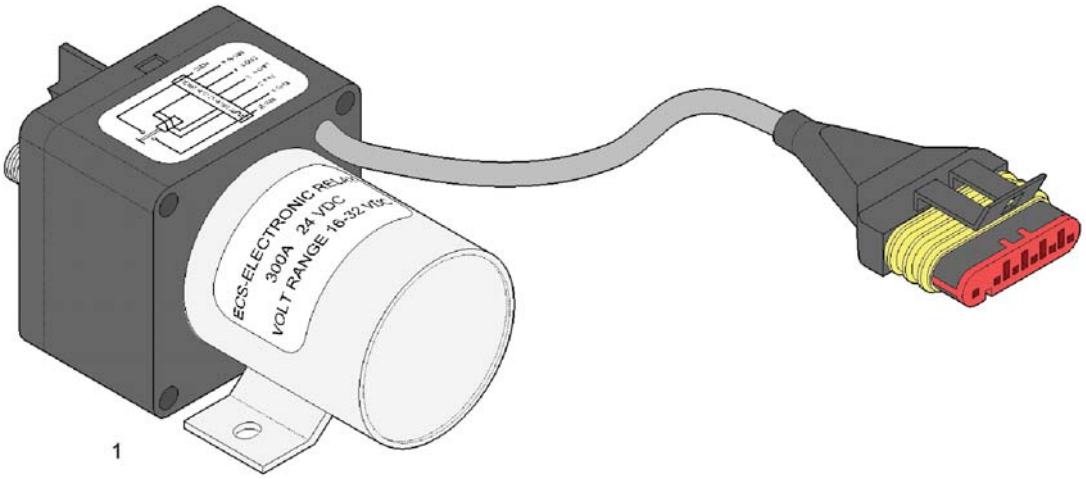

1

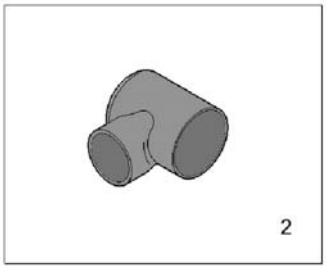

2

14100031224

Pos.	Q.	Part n°	Description	Specification
1	1	11409325	Intelligent battery isolation switch	
2	2	10951656	Protection shield	

Circuit breakers (24V)

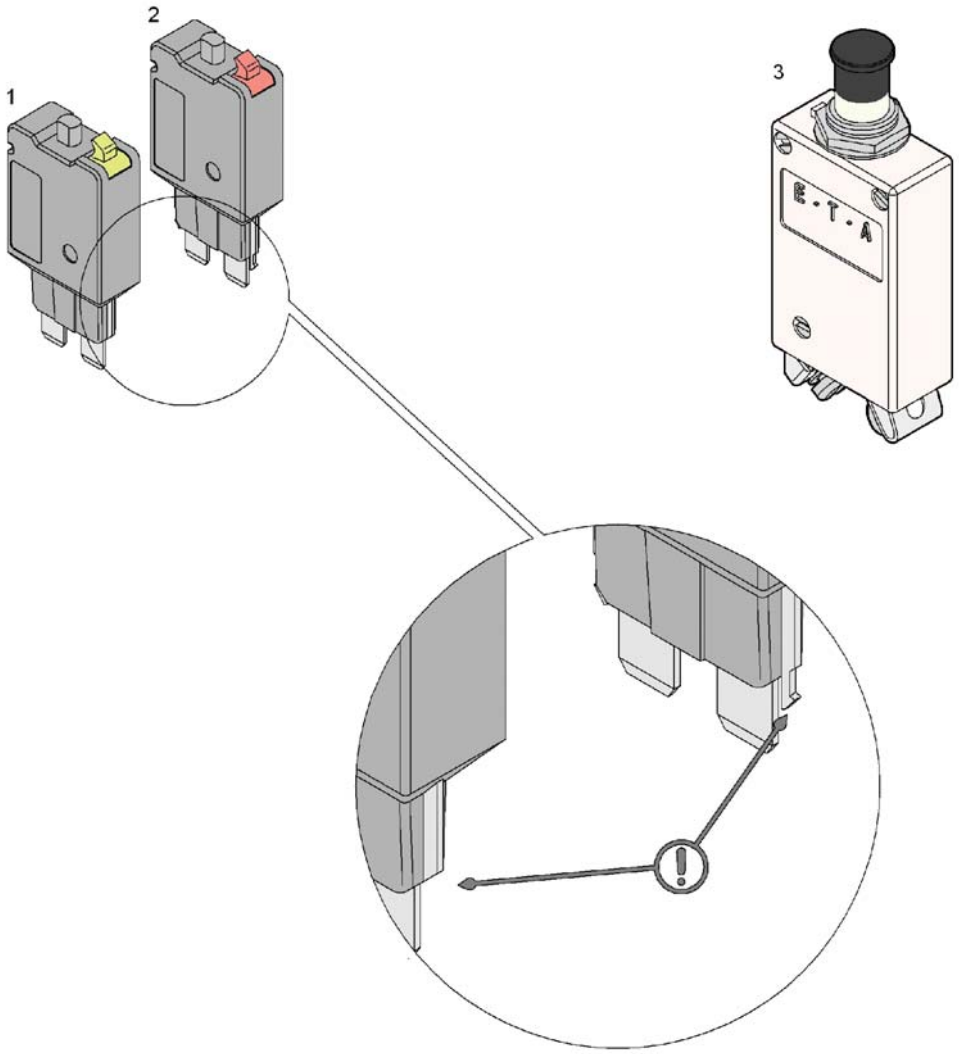

Pos.	Q.	Part n°	Description	Specification
1	#	10599051	Circuit breaker	3A
	#	10521076	Circuit breaker	6A
	#	10521077	Circuit breaker	8A
	#	10599052	Circuit breaker	10A
	#	10521078	Circuit breaker	15A
	#	10679438	Circuit breaker	20A
	#	10521079	Circuit breaker	25A
2	#	10627930	Circuit breaker	10A
3	#	660763515	Circuit breaker	7,5A

Fuses

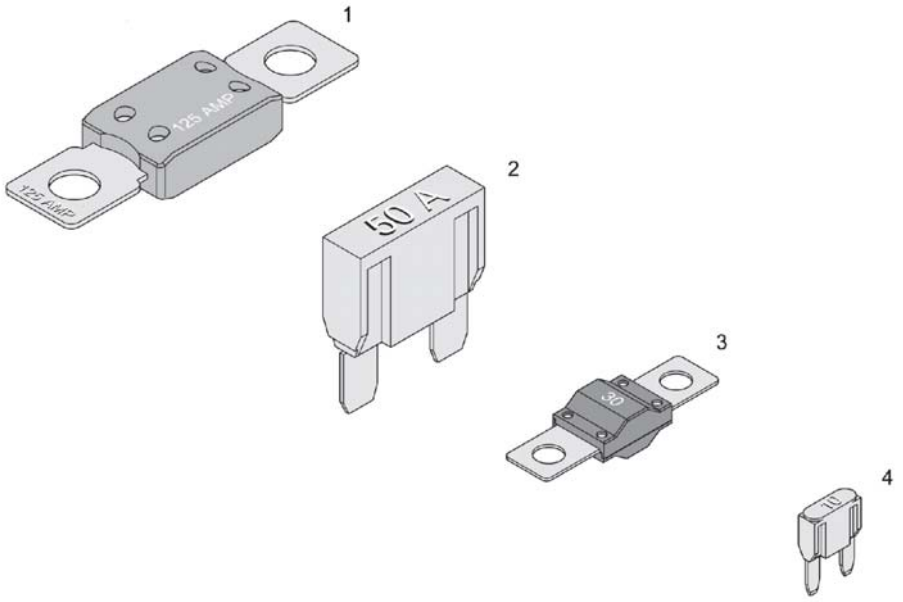

Pos.	Q.	Part n°	Description	Specification
1	#	11032118	Fuse	80A MEGA
	#	10531354	Fuse	100A MEGA
	#	10531355	Fuse	125A MEGA
	#	10531356	Fuse	150A MEGA
	#	10971745	Fuse	200A MEGA
	#	11250409	Fuse	250A MEGA
	#	11113891	Fuse	300A MEGA
	#	11179128	Fuse	400A MEGA
2	#	10583491	Fuse	20A MAXI
	#	10531351	Fuse	30A MAXI
	#	10703212	Fuse	40A MAXI
	#	10531352	Fuse	50A MAXI
	#	10605973	Fuse	80A MAXI
3	#	10930132	Fuse	30A MIDI
	#	10930133	Fuse	40A MIDI
	#	10774226	Fuse	50A MIDI
	#	10772049	Fuse	80A MIDI
4	#	10730673	Fuse	2A MINI

Fuses

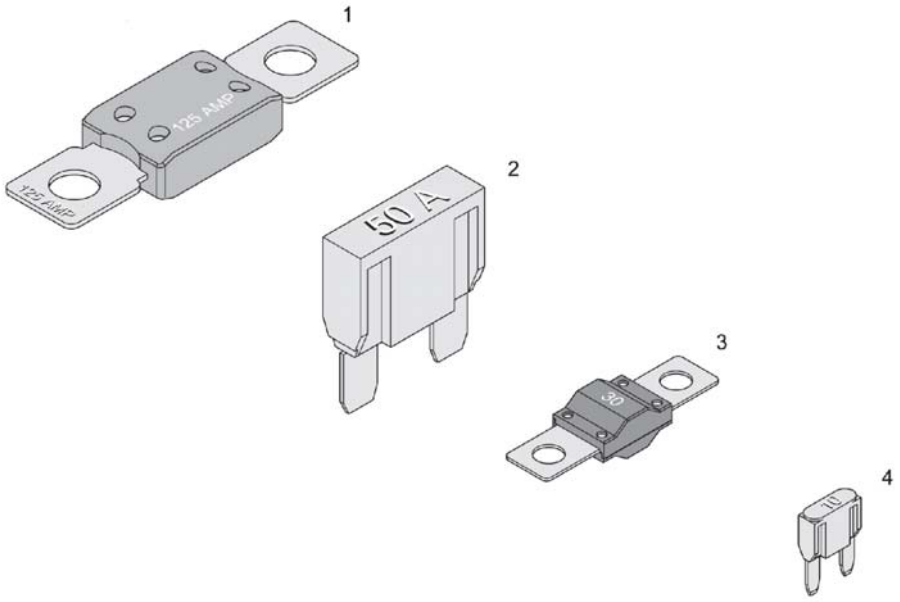

Pos.	Q.	Part n°	Description	Specification
	#	660746318	Fuse	3A MINI
	#	660746319	Fuse	5A MINI
	#	660746314	Fuse	7.5A MINI
	#	660746317	Fuse	10A MINI
	#	660746315	Fuse	15A MINI
	#	660746316	Fuse	25A MINI
	#	660746320	Fuse	20A MINI

Fuse holders (AK 8P)

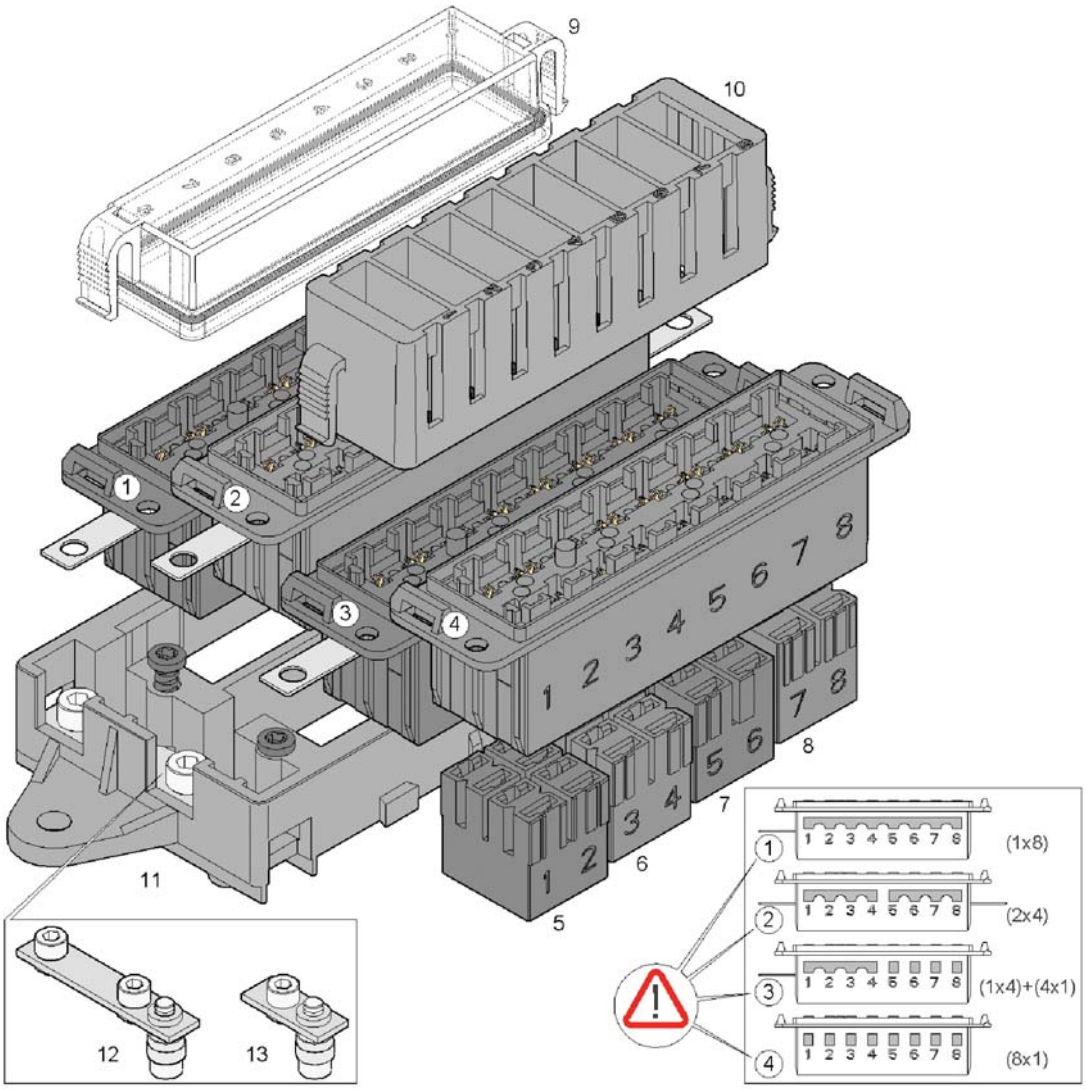

Pos.	Q.	Part n°	Description	Specification
1	#	11032221	Fuse holder	(8x1)
2	#	11032218	Fuse holder	(2x4)
3	#	11032223	Fuse holder	(1x4)+(4x1)
4	#	11032212	Fuse holder	(8x1)
5	#	11032224	Socket	1_2/B_A
6	#	11032226	Socket	3_4/D_C
7	#	11032228	Socket	5_6/F_E
8	#	11032229	Socket	7_8/H_G
9	#	10904075	Cover	
10	#	11032230	Spacer	
11	#	11041188	Holder	
12	#	11042729	Bridge	2P
13	#	11042728	Bridge	1P

Fuse holders (MIDI)

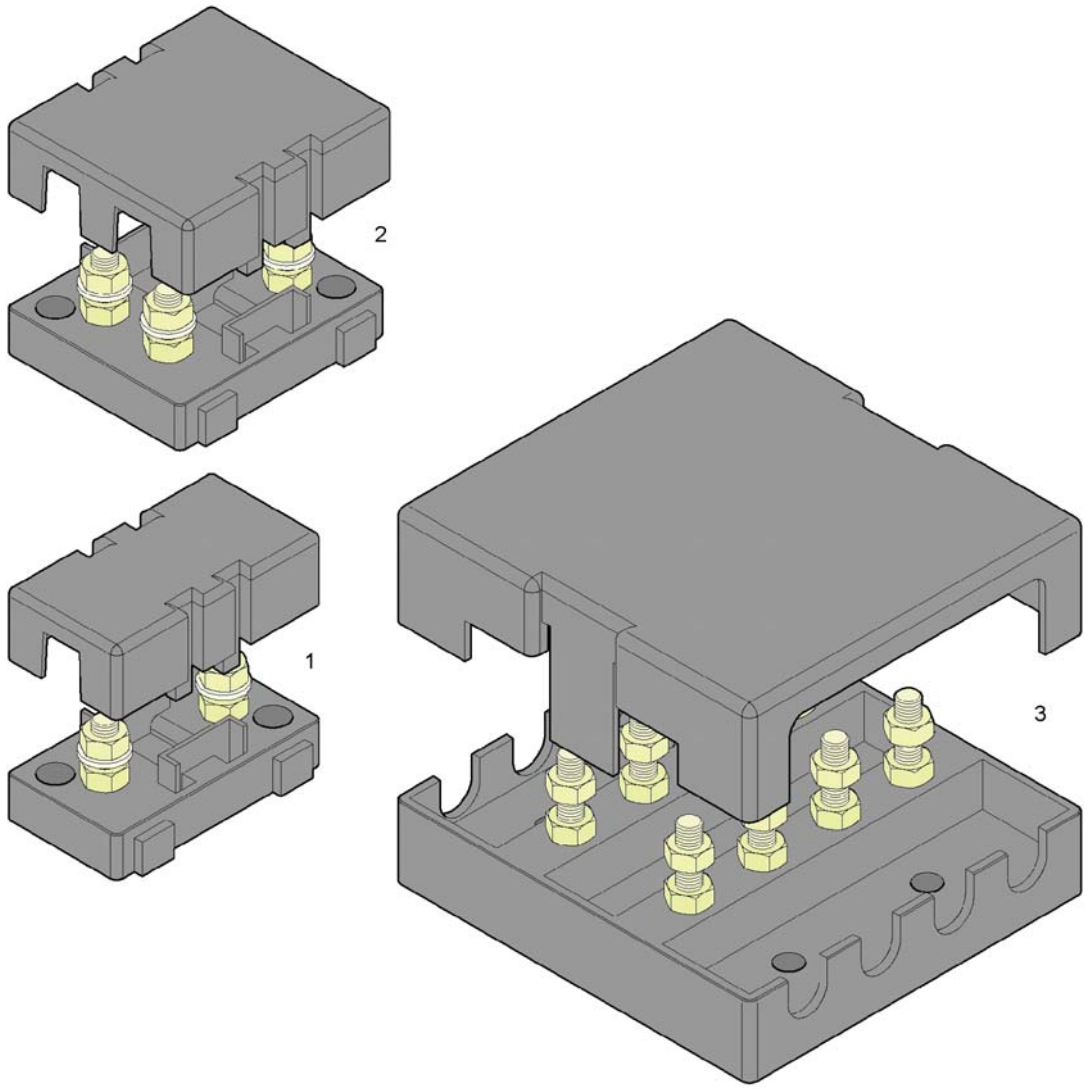

Pos.	Q.	Part n°	Description	Specification
1	#	10772047	Fuse holder	1P
2	#	10947657	Fuse holder	2P
3	#	10947652	Fuse holder	4P